This Owner's Manual is provided and hosted by Appliance Factory Parts.

Appliance Factory Parts
Experts in BBQ, Humidifier, & Appliance Parts
1-800-955-7075

White Mountain Hearth DVL33IN73N-2 Owner's Manual

Shop genuine replacement parts for White Mountain Hearth DVL33IN73N-2

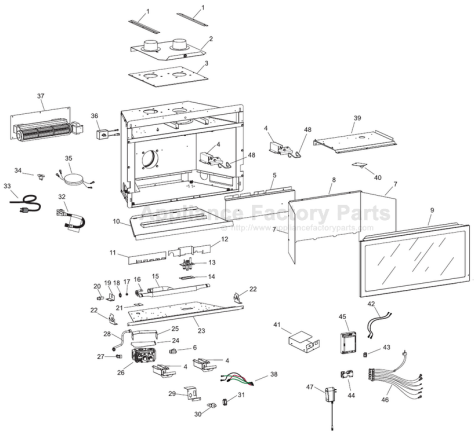

Find Your White Mountain Hearth Fireplace Parts - Select From 539 Models

-------- Manual continues below --------

EMPIRE
COMFORT SYSTEMS
SINCE 1932

INSTALLATION INSTRUCTIONS AND OWNER'S MANUAL

INSTALLER: Leave this manual with the appliance.
CONSUMER: Retain this manual for future reference.

⚠ WARNING: If not installed, operated and maintained in accordance with the manufacturer's instructions, this product could expose you to substances in fuel or from fuel combustion which can cause death or serious illness.

⚠ WARNING

FIRE OR EXPLOSION HAZARD
Failure to follow safety warnings exactly could result in serious injury, death or property damage.

- **Do not store or use gasoline or other flammable vapors and liquids in the vicinity of this or any other appliance.**
- **WHAT TO DO IF YOU SMELL GAS**
  - **Do not try to light any appliance.**
  - **Do not touch any electrical switch; do not use any phone in your building.**
  - **Leave the building immediately.**
  - **Immediately call your gas supplier from a neighbor's phone. Follow the gas supplier's instructions.**
  - **If you cannot reach your gas supplier, call the fire department.**
- **Installation and service must be performed by a qualified installer, service agency or the gas supplier.**

DIRECT VENT GAS FIREPLACE HEATER

MODEL SERIES:

DVL25IN33(N,P)-1
DVL33IN33(N,P)-1
DVL25IN73(N,P)-2
DVL33IN73(N,P)-2

UL FILE NO. MH30033

GAS-FIRED C UL US LISTED

LOFT FIREPLACE INSERT

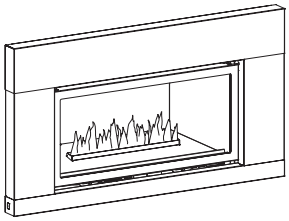

This appliance may be installed in an aftermarket, permanently located, manufactured home (USA only) or mobile home, where not prohibited by state or local codes.

This appliance is only for use with the type of gas indicated on the rating plate. This appliance is not convertible for use with other gases, unless a certified kit is used.

⚠ WARNING

HOT GLASS WILL CAUSE BURNS.
DO NOT TOUCH GLASS UNTIL COOLED.
NEVER ALLOW CHILDREN TO TOUCH GLASS.

A barrier designed to reduce the risk of burns from the hot viewing glass is provided with this appliance and shall be installed for the protection of children and other at-risk individuals.

NATIONAL FIREPLACE INSTITUTE® NFI CERTIFIED www.nficertified.org

We suggest that our gas hearth products be installed and serviced by professionals who are certified in the U.S. by the National Fireplace Institute® (NFI) as NFI Gas Specialists.

TABLE OF CONTENTS

SECTION	PAGE
IMPORTANT SAFETY INFORMATION	3
SAFETY INFORMATION FOR USERS OF LP GAS	4
INTRODUCTION	5
SPECIFICATIONS	6
FIREPLACE INSERT DIMENSIONS	7
MANTLE AND TRIM CLEARANCES	8
GAS SUPPLY	9
VENTING AND INSTALLATION	10-12
VERTICAL TERMINATION	13-14
ALTERNATE ON/OFF SWITCH INSTALLATION	15
SURROUND PANEL INSTALLATION	16
BLOWER ACCESSORY INFORMATION	17
OPTIONAL DECORATIVE GLASS PLACEMENT	18
MILLIVOLT OPERATING INSTRUCTIONS	19
STANDING PILOT LIGHTING INSTRUCTIONS	20
STANDING PILOT WIRING	21
STANDING PILOT TROUBLESHOOTING	22
IPI ELECTRONIC SYSTEM OPERATING INSTRUCTIONS	23
IPI ELECTRONIC SYSTEM WIRING DIAGRAM	24
INTERMITTENT PILOT LIGHTING INSTRUCTIONS	25
INTERMITTENT PILOT CONTROL SYSTEM TROUBLESHOOTING	26-28
INSERT MAINTENANCE AND SERVICE	29
DECORATIVE ACCESSORIES	30-31
INSERT PARTS VIEW	32
INSERT PARTS LIST	32-33
MASTER PARTS DISTRIBUTOR LIST	34
HOW TO ORDER REPAIR PARTS	34
WARRANTY TERMS	35

IMPORTANT SAFETY INFORMATION

Before enclosing the vent pipe assembly, operate the appliance to ensure it is venting properly.

DO NOT OPERATE THIS APPLIANCE WITHOUT GLASS FRONT PANEL INSTALLED

⚠ **DANGER**: Indicates a hazardous situation which, if not avoided, will result in death or serious injury.

⚠ **WARNING**: Indicates a hazardous situation which, if not avoided, could result in death or serious injury.

⚠ **CAUTION**: Indicates a hazardous situation which, if not avoided, could result in minor or moderate injury.

NOTICE: Addresses practices not related to personal injury.

- **Children and adults should be alerted to the hazards of high surface temperatures and should stay away to avoid burns or clothing ignition.**
- **Young children should be carefully supervised when they are in the same room as the appliance.**
- **Clothing or other flammable material should not be placed on or near the appliance.**
- **Adequate accessibility clearances for servicing and proper operation should be maintained.**
- **Under no circumstances should any solid fuels (wood, coal, paper or cardboard etc.) be used in this appliance.**
- **Keep the area around your appliance clear of combustible materials, gasoline and other flammable vapor and liquids.**
- **This appliance must not share or be connected to a flue serving a separate solid-fuel burning appliance.**
- **The flow of combustion and ventilation air must not be obstructed in any way.**
- **The fireplace insert must be installed in either a masonry or factory-built wood burning fireplace. See Page 7 for fireplace opening size requirements.**
- **Young children should be carefully supervised when they are in the same room as the appliance. Toddlers, young children, and others may be susceptible to accidental contact burns. A physical barrier is recommended if there are at-risk individuals in the house. To restrict access to a fireplace or stove, install an adjustable safety gate to keep toddlers young children, and other at-risk individuals out of the room and away from hot surfaces.**
- **A barrier designed to reduce the risk of burns from the hot viewing glass is provided with this appliance and shall be installed for the protection of children and other at-risk individuals.**
- **If the barrier becomes damaged, the barrier shall be replaced with the manufacturer's barrier for this appliance.**
- **Any safety screen, guard, or barrier removed for servicing an appliance must be replaced prior to operating the appliance.**

- **Due to high temperatures the appliance should be located out of traffic and away from furniture and draperies.**
- **The glass front or any part removed for servicing the appliance must be replaced prior to operating the appliance. Work should be done by a qualified service person.**
- **Keep burner and control compartment clean.**
- **Vent cap is hot while fireplace is in operation.**
- **Installation and repair should be done by a QUALIFIED SERVICE PERSON. The appliance should be inspected before use and at least annually by a qualified service person. More frequent cleaning may be required due to excessive lint from carpeting, bedding materials, etc. It is imperative that control compartments, burners and circulating air passageways of the appliance be kept clean.**
- **DO NOT put anything around the fireplace insert that will obstruct the flow of ventilation air.**
- **Maintain clearances in accordance with local installation codes and the requirements of the gas supplier.**
- **DO keep the appliance area clear and free from combustible material, gasoline and other flammable vapors and liquids.**
- **DO examine venting system periodically and replace damaged parts.**
- **DO make a periodic visual check of pilot and burners. Clean and replace damaged parts.**
- **⚠ CAUTION: The glass used in your fireplace insert is ceramic glass. If the glass is cracked or damaged in any way, it should be replaced only with a complete glass frame assembly from Empire. See parts list on Pages 32-33 for ordering.**
- **DO NOT use this fireplace insert if any part has been under water. Immediately call a qualified service technician to inspect the heater and to replace any part of the control system and any gas control which has been under water.**
- **Any safety screen or guard removed for servicing an appliance must be replaced prior to operating the appliance.**

SAFETY INFORMATION FOR USERS OF LP GAS

Propane (LP-Gas) is a flammable gas which can cause fires and explosions. In its natural state, propane is odorless and colorless. You may not know all the following safety precautions which can protect both you and your family from an accident. Read them carefully now, then review them point by point with the members of your household. Someday when there may not be a minute to lose, everyone's safety will depend on knowing exactly what to do. If, after reading the following information, you feel you still need more information, please contact your gas supplier.

LP-GAS WARNING ODOR

If a gas leak happens, you should be able to smell the gas because of the odorant put in the LP-Gas. That's your signal to go into immediate action!

- Do not operate electric switches, light matches, use your phone. Do not do anything that could ignite the gas.
- Get everyone out of the building, vehicle, trailer, or area. Do that IMMEDIATELY.
- Close all gas tank or cylinder supply valves.
- LP-Gas is heavier than air and may settle in low areas such as basements. When you have reason to suspect a gas leak, keep out of basements and other low areas. Stay out until firefighters declare them to be safe.
- Use your neighbor's phone and call a trained LP-Gas service person and the fire department. Even though you may not continue to smell gas, do not turn on the gas again. Do not re-enter the building, vehicle, trailer, or area.
- **Finally**, let the service man and firefighters check for escaped gas. Have them air out the area before you return. Properly trained LP-Gas service people should repair the leak, then check and relight the gas appliance for you.

NO ODOR DETECTED - ODOR FADE

Some people cannot smell well. Some people cannot smell the odor of the chemical put into the gas. You must find out if you can smell the odorant in propane. Smoking can decrease your ability to smell. Being around an odor for a time can affect your sensitivity or ability to detect that odor. Sometimes other odors in the area mask the gas odor. People may not smell the gas odor or their minds are on something else. Thinking about smelling a gas odor can make it easier to smell.

The odorant in LP-Gas is colorless, and it can fade under some circumstances. For example, if there is an underground leak, the movement of the gas through soil can filter the odorant. Odorants in LP-Gas also are subject to oxidation. This fading can occur if there is rust inside the storage tank or in iron gas pipes.

The odorant in escaped gas can adsorb or absorb onto or into walls, masonry and other materials and fabrics in a room. That will take some of the odorant out of the gas, reducing its odor intensity.

LP-Gas may stratify in a closed area, and the odor intensity could vary at different levels. Since it is heavier than air, there may be more odor at lower levels. Always be sensitive to the slightest gas odor. If you detect any odor, treat it as a serious leak. Immediately go into action as instructed earlier.

SOME POINTS TO REMEMBER

- **Learn to recognize the odor of LP-Gas.** Your local LP-Gas Dealer can give you a "Scratch and Sniff" pamphlet. Use it to find out what the propane odor smells like. If you suspect that your LP-Gas has a weak or abnormal odor, call your LP-Gas Dealer.
- If you are not qualified, do not light pilot lights, perform service, or make adjustments to appliances on the LP-Gas system. If you are qualified, consciously think about the odor of LP-Gas prior to and while lighting pilot lights or performing service or making adjustments.
- Sometimes a basement or a closed-up house has a musty smell that can cover up the LP-Gas odor. Do not try to light pilot lights, perform service, or make adjustments in an area where the conditions are such that you may not detect the odor if there has been a leak of LP-Gas.
- Odor fade, due to oxidation by rust or adsorption on walls of new cylinders and tanks, is possible. Therefore, people should be particularly alert and careful when new tanks or cylinders are placed in service. Odor fade can occur in new tanks, or reinstalled old tanks, if they are filled and allowed to set too long before refilling. Cylinders and tanks which have been out of service for a time may develop internal rust which will cause odor fade. If such conditions are suspected to exist, a periodic sniff test of the gas is advisable. **If you have any question about the gas odor, call your LP-Gas dealer. A periodic sniff test of the LP-Gas is a good safety measure under any condition.**
- If, at any time, you do not smell the LP-Gas odorant and you think you should, assume you have a leak. Then take the same immediate action recommended above for the occasion when you do detect the odorized LP-Gas.
- If you experience a complete "gas out," (the container is under no vapor pressure), turn the tank valve off immediately. If the container valve is left on, the container may draw in some air through openings such as pilot light orifices. If this occurs, some new internal rusting could occur. If the valve is left open, then treat the container as a new tank. Always be sure your container is under vapor pressure by turning it off at the container before it goes completely empty or having it refilled before it is completely empty.

INTRODUCTION

Instructions to Installer

1. Leave instruction manual with owner after installation.
2. Have owner fill out and mail registration card supplied with the fireplace.
3. Show owner how to start and operate the fireplace.

This direct-vent gas fireplace heater is designed to operate with all combustion air being siphoned from the outside of the building and all exhaust gases expelled to the outside of the building. The information contained in this manual pertains to all models and gas control systems unless otherwise noted.

⚠ WARNING

This unit is not for use with solid fuels

Appliance Certification

This fireplace is design certified in accordance with American National Standard/CSA Standard ANSI Z.21-88/CSA 2.33 and by Underwriters Laboratories as a Direct Vent Gas Fireplace Heater and shall be installed according to these instructions.

Consult your local building code agency, prior to installation, to ensure compliance with local codes-including permits and inspections.

The fireplace insert, when installed, must be electrically grounded in accordance with local codes or, in absence of local codes, with the *National Electric Code ANSI/NFPA 70* or Canadian Electric code, CSA C22.1, if an external electrical source is utilized.

These models may be installed in a bedroom or bed-sitting room in the U.S.A. and Canada.

Qualified Installing Agency

Installation and replacement of gas piping, gas utilization equipment or accessories and repair and servicing of equipment shall be performed only by a qualified agency. The term “qualified agency” means any individual, firm, corporation or company which either in person or through a representative is engaged in and is responsible for (a) the installation or replacement of gas piping or (b) the connection, installation, repair or servicing of equipment, who is experienced in such work, familiar with all precautions required and has complied with all the requirements of the authority having jurisdiction.

State of Massachusetts: The installation must be made by a licensed plumber or gas fitter in the Commonwealth of Massachusetts.

The installation must conform with local codes or, in the absence of local codes, with the *National Fuel Gas Code ANSI Z223.1/NFPA 54* Natural Gas and Propane Installation Code, or CSA B149.1 in Canada. *Available from the American National Standards Institute, Inc. 11 West 42nd St., New York, N.Y. 10036.*

NOTICE: Prior to operating this unit, be sure to clean the interior porcelain coated liner panels and glass door with a soft clean cloth. Due to normal manufacturing processes, fingerprints and excess sealing materials may be present and should be removed. When cleaning, do not use abrasives.

⚠ WARNING

ANY CHANGE TO THIS FIREPLACE OR ITS CONTROLS CAN BE DANGEROUS.
Improper installation or use of the fireplace can cause serious injury or death from fire, burns, explosions, or carbon monoxide poisoning

Any alteration of the original design, installed other than as shown in these instructions or use with a type of gas not shown on the rating plate is the responsibility of the person and company making the change.

Important

All correspondence should refer to complete Model Number, Serial Number and type of gas.

High Altitude

When installing this unit at an elevation above 2000 feet (in the United States) it may be necessary to decrease the input rating by changing the existing burner orifice to a smaller size. Generally, input should be reduced 4 percent for each 1000 feet above sea level. However, if the heating value of the gas has been reduced, this general rule may not apply. Check with local gas utility for proper orifice size identification.

Canadian High Altitude

Altitude: 0-4500 feet (0-1370 m)

When installing this unit at an elevation above 4500 feet (in Canada), check with local authorities.

Consult your local gas utility for assistance in determining the proper orifice for location.

Preparation

This direct vent gas fireplace insert and its components are tested and safe when installed in accordance with this Installation Manual. Report to your dealer any parts damaged in shipment, specifically check glass condition. Do not install unit with damaged, incomplete, or substitute parts. Read all instructions before starting installation and follow these instructions carefully during installation to insure maximum benefit and safety. Failure to follow them will void your warranty and may present a fire hazard.

The warranty will be voided by, and the warranter disclaims any responsibility for the following actions:

- Installation of any damaged fireplace insert or vent system component.
- Modification of the fireplace insert or direct vent system.
- Installation other than as instructed by Empire Comfort Systems, Inc.
- Improper positioning of the optional decorative glass or glass door assembly.
- Installation and/or use of any component part not manufactured or approved by manufacturer.
- This appliance comes standard with a 120 VAC cord assembly to accommodate control options and the blower accessory. An outlet box may be installed in a bottom back corner of the existing solid fuel masonry or factory built fireplace to plug in the cord assembly, or the supplied power cord may be routed out onto the hearth to a nearby outlet.
- A 120 VAC circuit for this product must be protected with ground-fault circuit-interrupter protection, in compliance with the applicable electrical codes, when it is installed in locations such as in bathrooms nor near sinks.
- Low voltage and 120 VAC voltage cannot be shared within the same wall box.
- Once the appliance installation is completed, the installer should check that control compartment wiring is secured in a manner as to not interfere with door latches, valve controls, or the louver assembly.

SPECIFICATIONS

DVL25IN(3,7)3L MODELS	LP	Nat
Input Btu/hr Maximum	20,000	20,000
Btu/hr Minimum	16,000	14,000
KWH (Maximum)	5.9	5.9
(Minimum)	4.4	4.4
Orifice	1.35mm	2.20mm
Air Shutter Opening	5/16”	CLOSED

DVL33IN(3,7)3L MODELS	LP	Nat
Input Btu/hr Maximum	27,000	27,000
Btu/hr Minimum	22,000	19,000
KWH (Maximum)	7.83	7.83
(Minimum)	6.5	5.51
Orifice	1.55mm	#39 (.0995)
Air Shutter Opening	5/16”	3/32”

Remote Control Accessories	Description
FRBC	Millivolt Battery Remote ON/OFF
FRBTC	Millivolt Battery Remote Thermostat
TRW	Millivolt WIRELESS Wall Thermostat
TMV	Millivolt Reed Switch Wall Thermostat
FWS-1	Millivolt Wall Switch

Surround Kits	Description
4 Sided Contemporary - Stainless Steel Top & Bottom, Black Sides	
S2562BLSS	Stainless Steel, Black, for use on DVL25IN models
S3362BLSS	Stainless Steel, Black for use on DVL33IN models
4 Sided Traditional Black	
S2562BL	Black for use on DVL25IN models
S3362BL	Black for use on DVL33IN models
3 Sided Black Surrounds	
DS25661BL	For use on DVL25IN 6 x 6 inch - Required to use any Decorative Doors, Fronts or Contemporary Frames
DS33661BL	For use on DVL33IN 6 x 6 inch - Required to use any Decorative Doors, Fronts or Contemporary Frames
Traditional Cast Iron Surrounds	
SC256BL	For use on DVL25IN 6 x 6 inch
SC336BL	For use on DVL33IN 6 x 6 inch

SH-1-BL	Shroud (For fireplace openings up to 48” x 36” - Requires surround.)

FIREPLACE BARRIER SCREENS		
SCREEN MODEL	**DESCRIPTION**	**MODELS USED ON**
DVFQ25H(BL,HP,SS)	Lancaster Surround with Barrier - Black, Hammered Pewter, Stainless Steel	DVL25IN
DVFQ33H(BL,HP,SS)	Lancaster Surround with Barrier - Black, Hammered Pewter, Stainless Steel	DVL33IN
DVFQ25R(BL,HP,SS)	Eclipse Surround with Barrier - Black, Hammered Pewter, Stainless Steel	DVL25IN
DVFQ33R(BL,HP,SS)	Eclipse Surround with Barrier - Black, Hammered Pewter,Stainless Steel	DVL33IN
SQ2562(BL,BLSS)	Barrier Front - Black, Stainless Steel	DVL25IN
SQ3362(BL,BLSS)	Barrier Front - Black, Stainless Steel	DVL33IN

Note: A firescreen is required for operation of the appliance, but are sold separately. Follow the instructions that come with your firescreen for proper installation.

Venting Kits	Description	Contents
DVKI	Vertical Vent Kit - 17 1/2’	One piece of 35’ FlexVent (split for 17 1/2’ vent run), Round Cap, Flashing, connectors, and clamps. Recommended when installing to an existing round fireplace chimney pipe.
DVVK3FV	Vertical Vent Kit - 25’	Two pieces of 25’ FlexVent, Rectangle Cap, Flashing, connectors, and clamps Recommended when installing to a square or rectangular clay flue.
DVK35	Vent Extension Kit	35’ flex vent extension section with 2 connectors and 4 clamps

***NOTICE*:** When installing vent caps, special locally made flashings may be required to properly seal the vent system to the existing chimney termination.

FIREPLACE INSERT DIMENSIONS

When planning a fireplace insert installation, it's necessary to determine:

- The vent system configuration to be used.
- Gas supply piping.
- Whether optional accessories - devices such as a wall switch or remote control - are desired.
- Electrical supply requirements for blower.
- Proper opening size of fireplace required for installation of the fireplace insert.

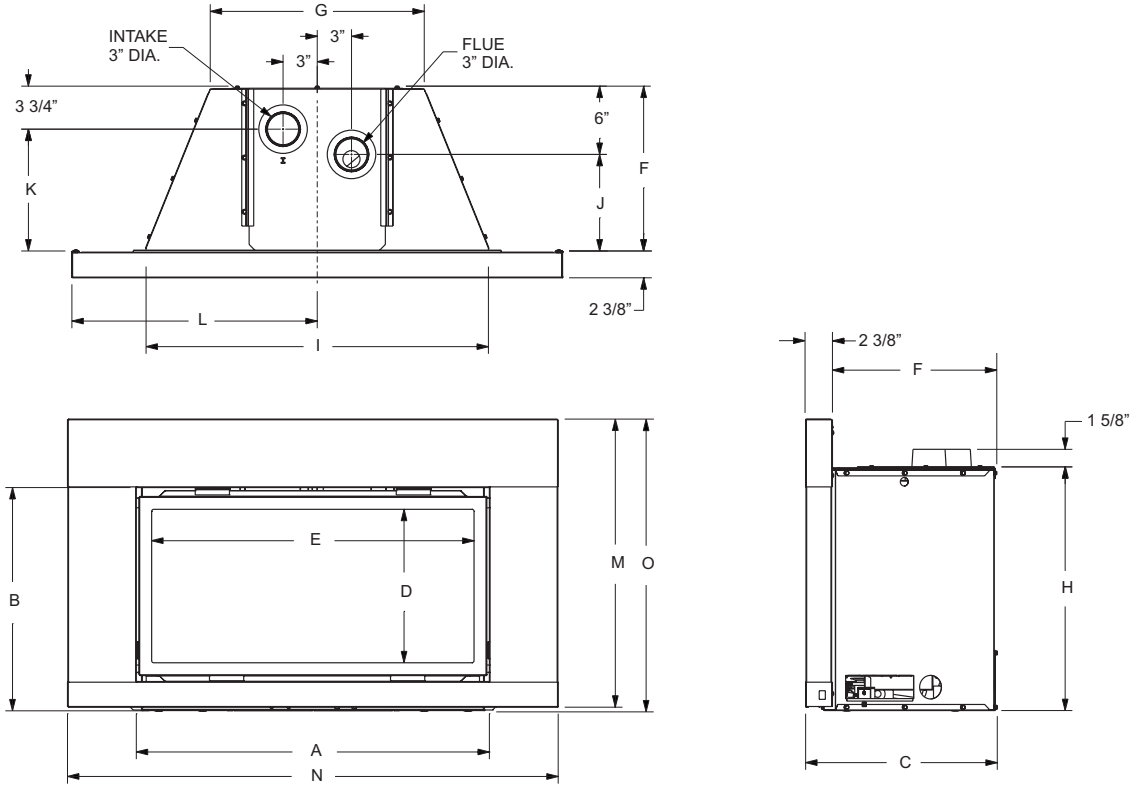

DV FIREPLACE INSERT DIMENSIONS (all dimensions in inches)															
MODEL	A	B	C	D	E	F	G	H	I	J	K	L	M	N	O
DVL25IN	28	16-1/2	15	10-1/2	25-1/4	12-3/4	17	18-5/16	27	6-7/8	9-1/4	20	22-1/4	40	22-1/2
DVL33IN	31	19-1/2	16-1/2	13-1/2	28-1/4	14-1/4	18-3/4	21-5/16	30	8-3/8	10-3/4	21-1/2	25-1/4	43	25-1/2

Figure 1

Fireplace Opening Dimensional Information/Sizing				
MINIMUM FIREPLACE OPENING DIMENSIONS (inches)				
MODEL NO.	HEIGHT A*	FRONT WIDTH B	DEPTH C	REAR WIDTH D
DVL25IN	18-3/8	27-1/2	12-3/4	17-1/4
DVL33IN	21-3/8	30-1/2	14-1/4	19

***NOTICE**: If the fireplace lintel is wider than 8" (203mm), the height of the fireplace opening must be increased a few inches to allow for a gradual offset in the exhaust and/or intake vent pipes.

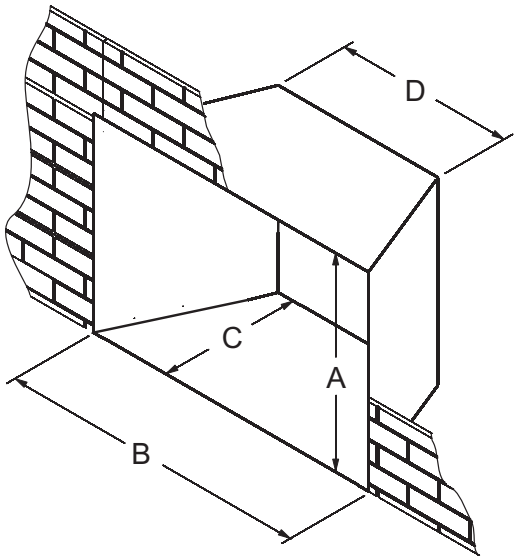

Figure 2

MANTLE AND TRIM CLEARANCES

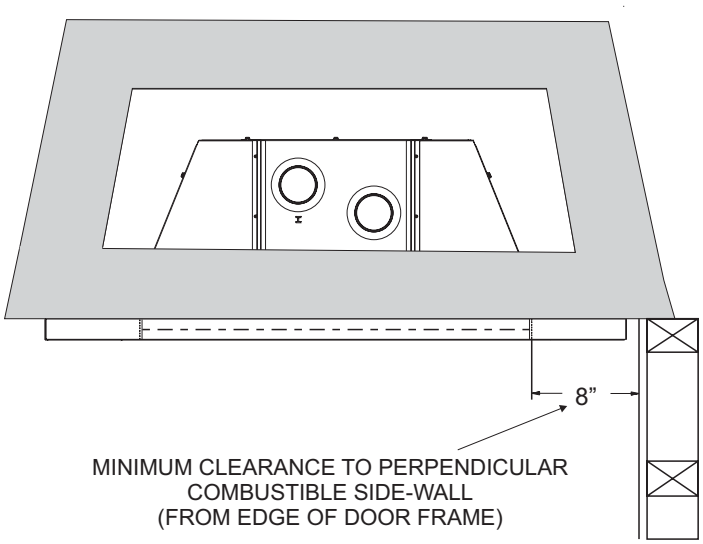

Figure 3

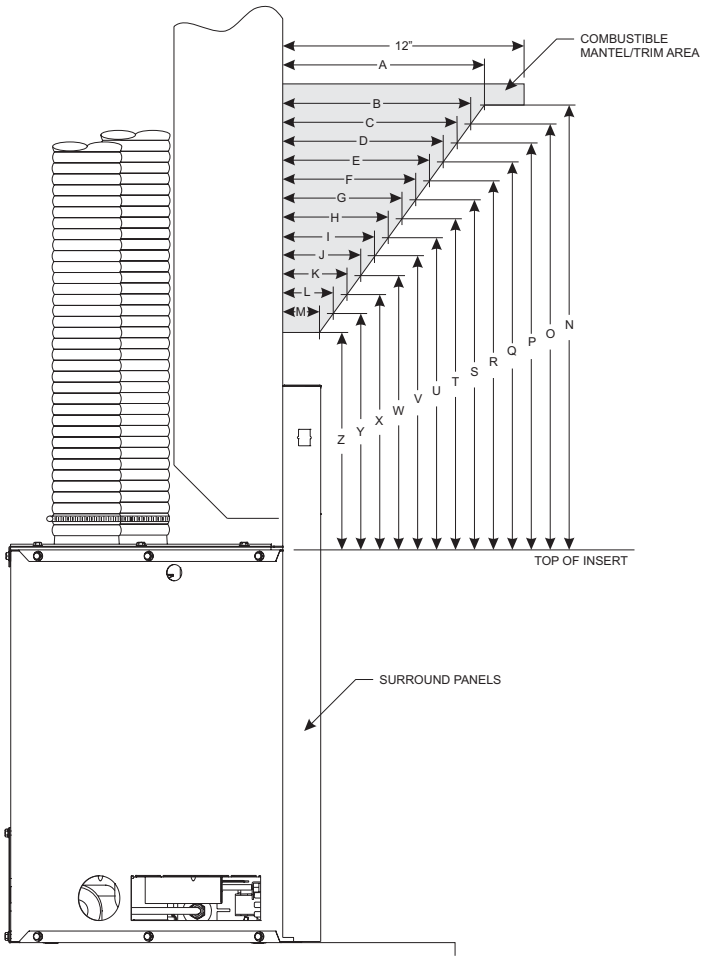

Distance from Face of Fireplace		Height Above Top of Insert	
A	10”	N	23”
B	9-1/4”	O	22”
C	8-3/4”	P	21”
D	8”	Q	20”
E	7-1/4”	R	19”
F	6-1/2”	S	18”
G	6”	T	17”
H	5-1/4”	U	16”
I	4-1/2”	V	15”
J	3-3/4”	W	14”
K	3”	X	13”
L	2-1/2”	Y	12”
M	1-3/4”	Z	11”

Figure 4

Combustible Material
No greeting cards, stockings or ornamentation of any type should be placed on or attached to the fireplace. The flow of heat can ignite combustibles.

GAS SUPPLY

The gas pipeline can be brought in through the right or left side of the appliance. The insert has a Flexline with shutoff valve located on the right side when facing the unit. **See Figures 5 and 6.** Consult the current National Fuel Gas Code, ANSI Z223.1 CAN/CGA-B149 (.1 or .2) installation code.

Recommended Gas Pipe Diameter				
Pipe Length	**Schedule 40 Pipe Inside Diameter**		**Tubing, Type L Outside Diameter**	
	Nat.	L.P.	Nat.	L.P.
0-10ft 0-3m	1/2" 12.7mm	3/8" 9.5mm	1/2" 12.7mm	3/8" 9.5mm
11-40ft 4-12m	1/2" 12.7mm	1/2" 12.7mm	5/8" 15.9mm	1/2" 12.7mm
41-100ft 13-30m	1/2" 12.7mm	1/2" 12.7mm	3/4" 19mm	1/2" 12.7mm
101-150ft 31-46m	3/4" 19mm	1/2" 12.7mm	7/8" 22.2mm	3/4" 1.9 mm

NOTICE: Never use plastic pipe. Check to confirm whether your local codes allow copper tubing or galvanized.
NOTICE: Since some municipalities have additional local codes, it is always best to consult your local authority and installation code.

The use of the following gas connectors is recommended:

— ANS Z21.24 Appliance Connectors of Corrugated Metal Tubing and Fittings.

— ANS Z21.45 Assembled Flexible Appliance Connectors of Other Than All-Metal Construction

The above connectors may be used if acceptable by the authority having jurisdiction. The state of Massachusetts requires that a flexible appliance connector cannot exceed three feet in length.

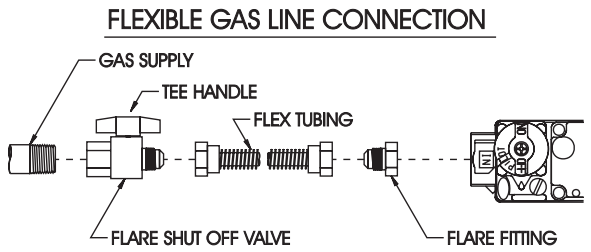

Figure 5

	Gas Supply Pressure (inches w.c.)		
	Minimum	Normal	Maximum
Natural Gas	4.5"	7.0"	14.0"
LP (Propane)	10.8"	11.0"	14.0"
	Manifold Pressure (inches w.c.)		
	Normal (HI)		
Natural Gas	3.5"		
LP (Propane)	10.0"		

Installing the Main Gas Cock

Each appliance should have its own manual gas cock.
A manual main gas cock should be located in the vicinity of the unit. Where none exists, or where its size or location is not adequate, contact your local authorized installer for installation or relocation. Compounds used on threaded joints of gas piping shall be resistant to the action of liquefied petroleum gases. The gas lines must be checked for leaks by the installer. This should be done with a soap solution watching for bubbles on all exposed connections, and if unexposed, a pressure test should be made.

Never use an exposed flame to check for leaks. Appliance must be disconnected from piping at inlet of control valve and pipe capped or plugged for pressure test. Never pressure test with appliance connected; control valve will sustain damage!

NOTICE: The millivolt gas controls are equipped with a captured screw type pressure test point, therefore it is not necessary to provide a 1/8" test point up stream of the control.

When using copper or flex connector use only approved fittings.
The appliance and it's individual shut off valve must be disconnected from supply piping system during any pressure testing of that system at test pressures in excess of 1/2 psig (3.5kPa).
The appliance must be isolated from the gas supply piping system by closing its individual manual shut off valve during any pressure testing of the gas supply piping system at test pressures equal to or less than 1/2 psig (3.5kPa).
Attention! If one of the procedures results in pressures in excess of 1/2 psig (14" w.c.) (3.5 kPa) on the fireplace gas valve, it will result in a hazardous condition.

Checking Manifold Pressures

Both Propane and Natural gas valves have a built-in pressure regulator in the gas valve. Natural gas models will have a manifold pressure of approximately 3.5" w.c. (.871kPa) at the valve outlet with the inlet pressure to the valve from a minimum of 4.5" w.c. (1.120kPa) for the purpose of input adjustment to a maximum of 14.0" w.c. (3.484kPa). Propane gas models will have a manifold pressure approximately 10.0" w.c. (2.49kPa) at the valve outlet with the inlet pressure to the valve from a minimum of 10.8" w.c. (2.68kPa) for the purpose of input adjustment to a maximum of 14.0" w.c. (3.484kPa).

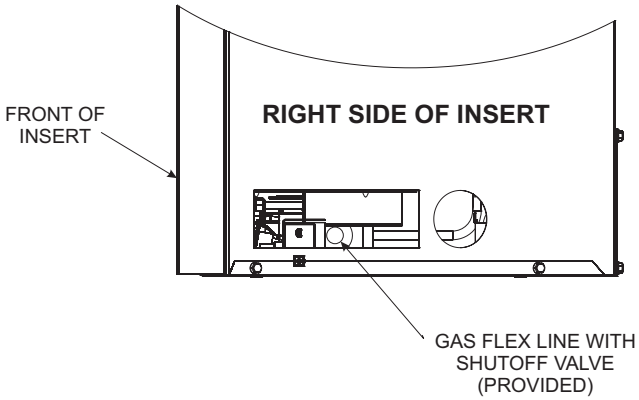

Figure 6

VENTING AND INSTALLATION

1. To begin, remove the glass door from the unit. Note: The glass door assembly is secured to the firebox with two (2) spring clamps at the top of the door, and two (2) spring clamps at the bottom of the door. Check to make sure there is no hidden damage to the unit. Take a minute and plan out the gas, venting and electrical route. It is best to start with the gas line first, followed by the chimney liner and electrical supply requirements.
2. Minimum fireplace opening requirements are shown in **Figure 2** of this installation manual. The firebrick (refractory), glass doors, screen rails, screen mesh and log grates can be removed from a factory built fireplace in order to gain minimum gas insert opening requirements prior to installing the gas fireplace insert.
3. Although the insert does not require a hearth extension, only heat resistant materials such as stone, metal, tile, etc. should be used. Do not use vinyl, carpet, or wood based products within 16 inches of the insert face. Do not obstruct the lower louver (if included), or other vented openings on the insert. Note: The original fireplace cannot be returned to solid fuel use without returning the hearth extension to the specification required for a solid fuel fireplace.
4. The metal floor of the solid fuel firebox may be removed to facilitate the installation of the insert. CLEARANCE TO COMBUSTIBLE MATERIAL UNDER THE INSERT IS 1/4". YOU MUST USE THE LEVELING LEGS TO RAISE THE INSERT A MINIMUM OF 1/4" IF THE INSERT IS TO SIT ON COMBUSTIBLE MATERIAL. The side walls and top structure of the firebox may not be altered with the exception of removable baffles and dampers. Smoke shields, shelves and baffles may be removed if attached with mechanical fasteners. The original fireplace cannot be returned to solid fuel in this condition.
5. The original specified clearances of a factory-built fireplace must be maintained, with the exception of the hearth. Clearances on a masonry fireplace must be maintained at 12" from the opening for combustible projections over 1 1/2". Clearances for combustible projections under 1 1/2" must be maintained at 6" from the opening per NFPA211. Plan the surround size accordingly. A surround must be used with the insert.

⚠ WARNING

Under no circumstance can combustible material be placed behind the surround.

6. All manufacturer supplied surrounds, shrouds, and decorative front options have been tested and are approved for use with the fireplace insert and may cover existing air circulation vents or grills on the solid fuel fireplace it is installed into..

***NOTICE*: Surround panel kits have been tested and approved to cover existing air circulation vents or grills.**

⚠ WARNING

Only surrounds, shrouds, and decorative front components supplied by the manufacturer may be used to cover integral grills on the solid-fuel burning fireplace. No other components such as sheet metal plates may be used to seal off vents

7. To assure top performance, safety and efficiency, inserts must be installed with an approved flue liner as per CAN/CGA B-149 or National Fuel Code ANSI Z223 and these instructions.

***NOTICE*: The following statement is also provided on a separate label plate in the instruction packet. Prior to installation of the fireplace insert, the installer must mechanically secure this warning plate to the inside of the fireplace for future reference as required.**

⚠ WARNING

The solid fuel fireplace has been converted for use with gas only and cannot be used for burning wood or solid fuels unless all original parts have been replaced and the fireplace has been reapproved by the authority having jurisdiction.

8. The solid fuel fireplace's flue damper must be fully locked in the open position or removed for installation of the gas fireplace insert.
9. The fireplace and fireplace chimney must be cleaned and in good working order and constructed of noncombustible materials.
10. Make sure that all chimney cleanouts fit properly so air cannot leak into the chimney.
11. Install the insert without the surround panels attached and make all gas, venting, and electrical connections.
12. To complete the installation reinstall the glass door assembly, then install the surround panel assembly. Please refer to instructions included with the surround panel kit.

⚠ WARNING

The glass door assembly must be secured with all four (4) spring latches for proper operation of the fireplace insert. Do NOT operate without the glass door installed.

⚠ CAUTION

Ensure there are no obstructions to side air passages of decorative trim once installed on insert.

INSTALLING THE VENT SYSTEM

Vent System Installation Precautions

Before starting installation of vent kits, the installer should read these instructions and the Vent Kit Instructions to ensure that a proper vent installation is completed. Consult your local Building Codes before beginning the Installation.

⚠ WARNING

THIS GAS INSERT AND VENT ASSEMBLY MUST BE VENTED DIRECTLY TO THE OUTSIDE AND MUST NEVER BE ATTACHED TO A CHIMNEY SERVING A SEPARATE SOLID FUEL BURNING APPLIANCE. EACH GAS APPLIANCE MUST USE A SEPARATE VENT SYSTEM. COMMON VENT SYSTEMS ARE PROHIBITED.

VENTING AND INSTALLATION

Vent System Approvals

Figure 8 shows the vent termination caps and systems approved for use with these models. Approved vent system terminations are labeled for identification. 3-inch diameter listed flexible aluminum or stainless steel gas vent is used for both the incoming combustion air and exhaust vent pipes. NO OTHER VENTING SYSTEMS OR COMPONENTS MAY BE USED. Detailed installation instructions are included with each vent termination kit and should be used in conjunction with this manual.

Horizontal Venting

The vent system on this model **CANNOT** be terminated horizontally.

Vertical Venting

The inlet and exhaust vent pipes **MUST** be connected to the proper collars on the unit **AND** to the termination cap or the unit will not operate. The intake vent collar is identified by a stamped "I" on the top collar sliding vent plate assembly.

⚠ WARNING

MAJOR U.S. BUILDING CODES SPECIFY MINIMUM CHIMNEY AND/OR VENT HEIGHT ABOVE THE ROOF TOP. THESE MINIMUM HEIGHTS ARE NECESSARY IN THE INTEREST OF SAFETY. SEE FIGURES 8 THROUGH 10 FOR MINIMUM HEIGHTS, PROVIDED THE TERMINATION CAP IS AT LEAST 2-FEET FROM A VERTICAL WALL AND 2-FEET BELOW A HORIZONTAL OVERHANG.

Note: This also pertains to vertical vent systems installed on the outside of the building.

⚠ WARNING

THE EXHAUST PIPE MUST ONLY BE CONNECTED TO THE EXHAUST STARTING COLLAR OF THE UNIT AND TO THE EXHAUST COLLAR OF THE TERMINATION CAP.

THE INLET AIR PIPE MUST ONLY BE CONNECTED TO THE INLET AIR STARTING COLLAR OF THE UNIT AND TO THE INLET AIR COLLAR OF THE TERMINATION CAP. BOTH THE INLET VENT AND THE FLUE VENT MUST BE CONNECTED FROM THE INSERT TO THE VENT TERMINATION CAP.

***NOTICE*:** The minimum vertical vent rise is 10 feet and the maximum vertical vent rise is 35 feet. These dimensions are measured from the starting collars of the unit to the end of the last section of vent pipe. **See Figure 8.**

***NOTICE*:** The damper of the masonry chimney may need to be removed to allow installation of the flexible-vent pipe.

When installing into a zero clearance, factory built wood-burning fireplace, the use of the DVKI Round Vertical Termination Kit should allow you to mount the vent adaptor and cap to the exposed round chimney pipe easily.

Connecting the Vent Pipe

⚠ CAUTION

Sharp edges. Always use gloves when installing.

Install the 3-inch flexible vent pipes down through the chimney.

Attach the pipe-to-cap adaptor to the termination cap and the top of the flexible vent pipe, then install the cap to the top of the chimney.

Remove the vent slide plate assembly from the top of the insert. **See Figure 7.** Trim off excess venting then attach and secure the bottom ends of the flex pipes to the starting collars with the adjustable band clamps provided. Slide the gas insert into place, and position any excess flex vent pipe back up into the chimney. Begin installation of the insert into the fireplace opening. Align the vent slide plate assembly with the guides located on top of the insert. Work the insert inch by inch into the fireplace cavity as you pull forward on the vent slide plate assembly. Do not use excessive force on the vent slide plate. Once the vent slide plate is close to seating, install the black button head 5/16-18 x 2 1/2" long bolt through the center hole of the insert top flange, and into the vent slide plate nut. Using the hex key wrench provided, tighten the bolt until the vent slide plate is seated forward completely.

Positioning, Leveling, and Securing Insert

1. Place the insert into position.

***NOTICE*:** The front flanges of the insert (without surround panels) should be set at approximately 1"(inch) in front of the face of the fireplace.

2. Level the insert from side to side and front to back.
3. If necessary, use the leveling bolts included in the instruction pack. Screw the legs into the nuts installed in the bottom of the insert. Turn legs in until insert is level.

⚠ CAUTION

TO AVOID DOWNDRAFTS AND/OR COLD AIR PROBLEMS, IT IS RECOMMENDED TO SEAL OFF THE AREA BETWEEN THE TERMINATION CAP AND THE TOP OF THE SOLID-FUEL CHIMNEY OPENING INTO WHICH THE VENT CAP HAS BEEN INSTALLED.

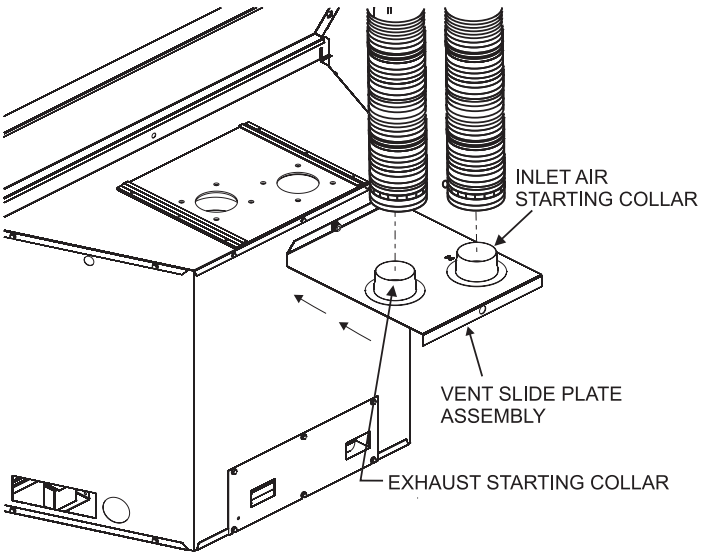

Figure 7

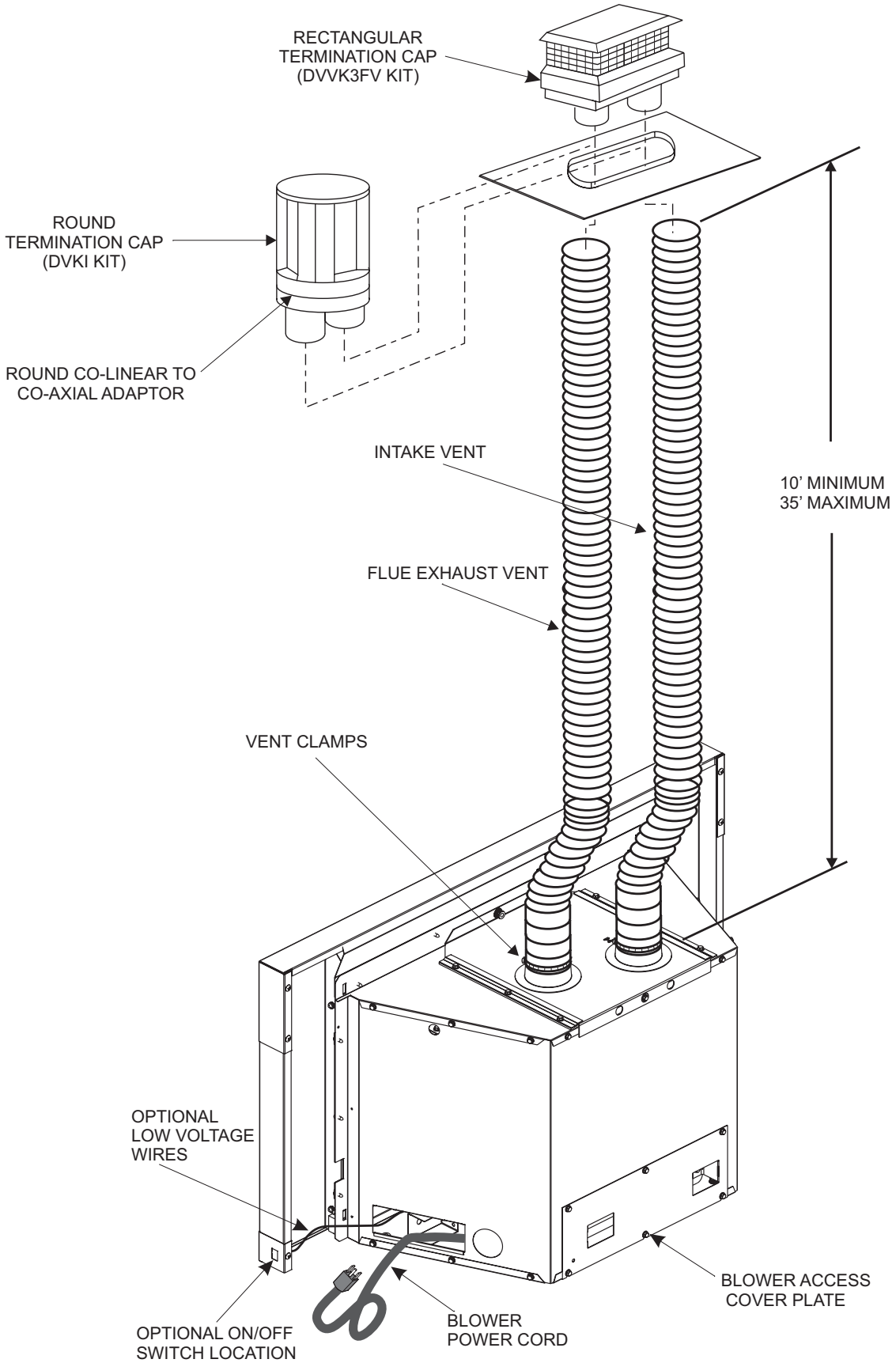
RECTANGULAR
TERMINATION CAP
(DVVK3FV KIT)
ROUND
TERMINATION CAP
(DVKI KIT)
ROUND CO-LINEAR TO
CO-AXIAL ADAPTOR
INTAKE VENT
10' MINIMUM
35' MAXIMUM
FLUE EXHAUST VENT
VENT CLAMPS
OPTIONAL
LOW VOLTAGE
WIRES
BLOWER ACCESS
COVER PLATE
OPTIONAL ON/OFF
SWITCH LOCATION
BLOWER
POWER CORD

Figure 8

VERTICAL TERMINATION

Determining Minimum Vent Height Above the Roof.

⚠ WARNING

Major U.S. building codes specify minimum chimney and/or vent height above the roof top. These minimum heights are necessary in the interest of safety. These specifications are summarized in Figure 9.

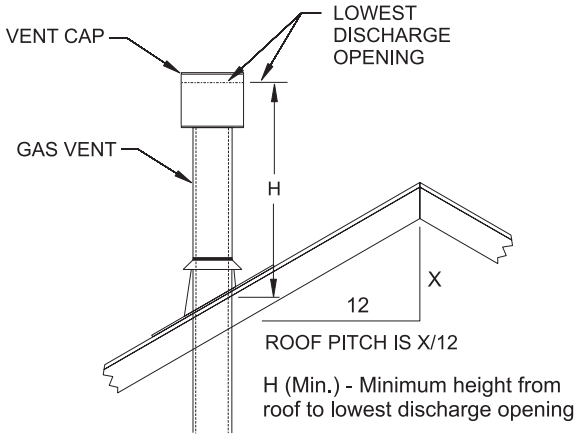

ROOF PITCH	H (Min.)
Flat to 6/12	12" (305 mm)
6/12 to 7/12	15" (381 mm)
Over 7/12 to 8/12	18" (457 mm)
Over 8/12 to 16/12	24" (610 mm)
Over 16/12 to 21/12	36" (914 mm)

Figure 9

Note that for steep roof pitches, the vent height must be increased. In high wind conditions, nearby trees, adjoining roof lines, steep pitched roofs, and other similar factors can result in poor draft, or down-drafting. In these cases, increasing the vent height may solve this problem.

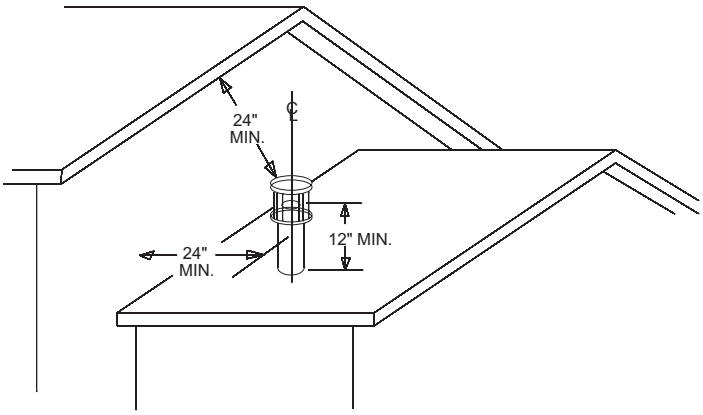

Figure 10

When terminating the vent cap near an exterior wall or overhang, maintain minimum clearances as shown in **Figure 10.**

Vertical Through the Roof Applications

The Gas Fireplace Insert has been approved for:

a) Vertical installations up to 35 feet in height (top of insert to cap).
b) Two sets of 45 degree elbow offsets (bends in flexvent) within the vertical installation. From 0 to a maximum of 8 ft. of vent pipe can be used between elbows.
c) Wall straps must be used to support offset pipe every 4'.

This application will require that you first determine the roof pitch and use the appropriate venting components.

General Maintenance

Conduct an inspection of the venting system semi-annually. Recommended areas to inspect are as follows:

1. Check areas of the venting system which are exposed to the elements for corrosion. These will appear as rust spots or streaks and, in extreme cases, holes. These components should immediately be replaced.
2. Remove the cap and shine a flashlight down the vent. Remove any bird nests or other foreign material.
3. Check for evidence of excessive condensate, such as water droplets forming in the flex venting and subsequently dripping out at joints or seams. Condensate can cause corrosion of caps, pipe and fittings. It may be caused by having excessive lateral runs, or having exterior portions of the system exposed to cold weather.
4. Inspect joints to verify that no pipe sections or fittings have been disturbed and, consequently, loosened. Also, check mechanical supports, such as wall straps or plumbers' tape for rigidity.

Tall Vent Heights

In some circumstances when venting vertically (20 to 30 feet), it may require that the flue baffle vent door be opened to improve performance. It is especially important during initial cold start-ups. To adjust, rotate the vent door enough to encourage better draft for improved combustion.

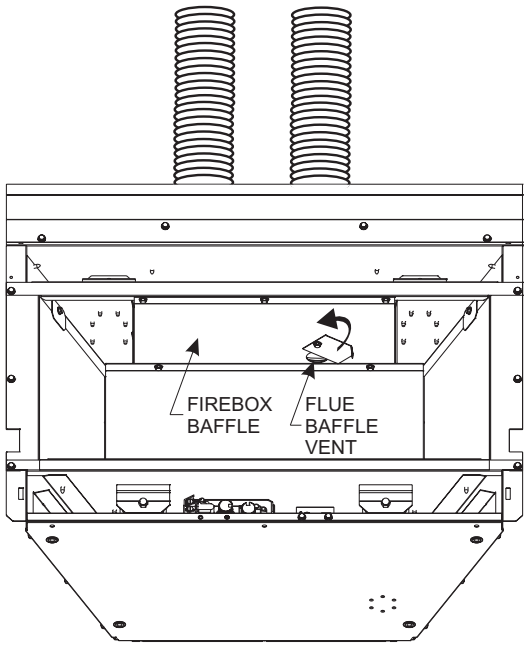

Figure 11

Optional Inlet Air Restrictor Plate Installation

Note: For certain installations wtih 20 to 35 feet vertical venting, or in high wind areas, the installation of the inlet air restrictor plate may be required. The optional restrictor plate is included in the instruction packet.

1. If applicable, remove glass door, rear liner panel, burner cover and side liner panels.
2. Remove log shelf bracket by removing the three screws securing it to the back of the firebox.
3. Locate the inlet air duct opening.
4. Loosen the two bottom screws that secure the inlet air duct collar at the rear of the firebox. See Figure 12.
5. Place the restrictor plate over the intake opening, align the plate with the loosened screws, shift the plate on the keyhole slots, then re-tighten the two screws. See Figure 12 for locating the Inlet Air Duct opening.
6. Reinstall the log support bracket using the three screws removed in step 2.
7. Reinstall the side liner panels, burner cover, rear liner panel and glass door.

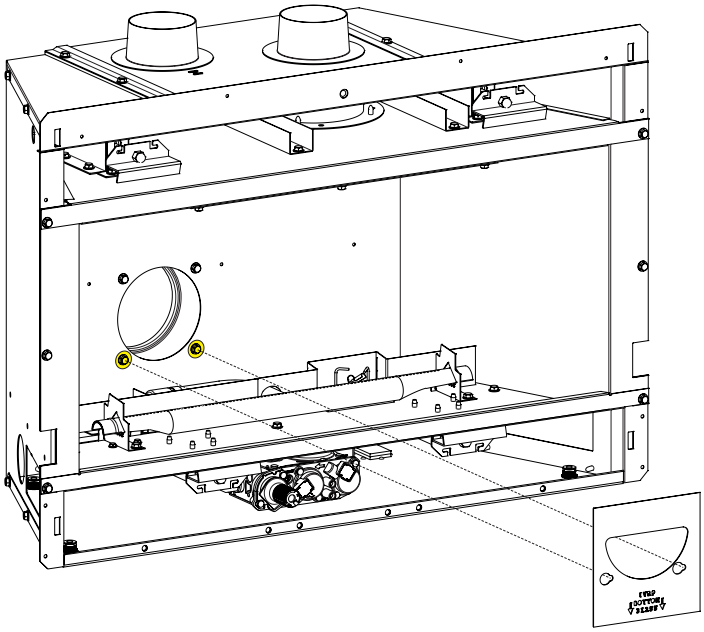

Figure 12

ALTERNATE ON/OFF SWITCH INSTALLATION

WIRING THE INSERT

***NOTICE*: Electrical wiring must be installed by a licensed electrician.**

⚠ CAUTION

DISCONNECT REMOTE CONTROLS IF YOU ARE ABSENT FOR EXTENDED TIME PERIODS. THIS WILL PREVENT ACCIDENTAL FIREPLACE OPERATION.

Installation of Alternate Surround Panel ON/OFF Switch

An ON/OFF switch and wire assembly are provided. They are included in the instruction packet.
Do not cut wire or insulation on metal edges.
***NOTICE*: Refer to surround panel installation section on page 16 for additional information on attachment.**

Contemporary Surrounds

1. Find the coiled low voltage wire assembly and ON/OFF switch located in the instruction packet.

2a. Millivolt Units: Attach the flag terminal ends to the "TH/TP" and "TH" terminals on the front terminal block of the gas valve. **See Figure 14.**

2b. IP Units: Disconnect the (2) black wires from the green and white wire connectors. Connect alternate On/Off switch wires to the green and white wires. **Note:** This bypasses the On/Off switch located on the front of the control module tray.

3. Run the low voltage alternate switch wires over to the right or left surround panel. Then secure the wires with wire clips provided. **See Figure 13.**

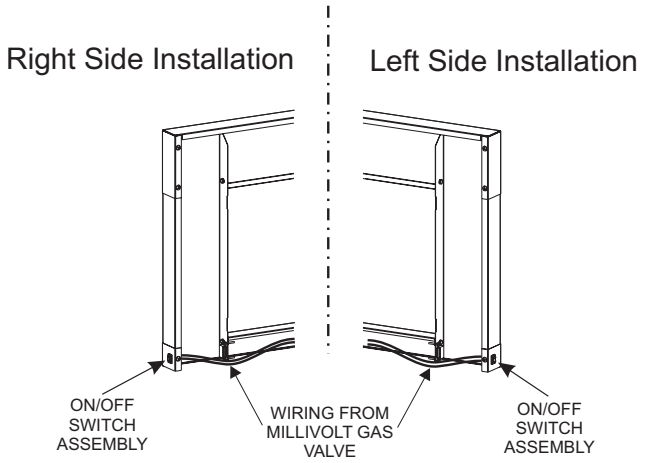

Figure 13

Insert ON/OFF switch into side panel then attach wire assembly from valve terminals on millivolt units, or from the green and white wire connectors on IP units.

4. Remove the switch knockout on the side surround panel, then install the ON/OFF switch. **See Figure 13.**

5. Connect the low voltage wires from the gas valve to the ON/OFF switch.

6. Attach the surround panel assembly to the insert. Hang the surround panel assembly on the face of the insert and center left to right.
   For S(25,33)62 (BL,BLSS) Surrounds: Swing the surround panel assembly inward until the bottom magnets contact the insert body side flanges.
   For DS(25,33)66BL Surrounds: Switn the surround assembly inward, then lift each leg slightly to engage the retainer hooks into the side flange notches of the insert.

   This secures the surround panel assembly to the insert without screws.

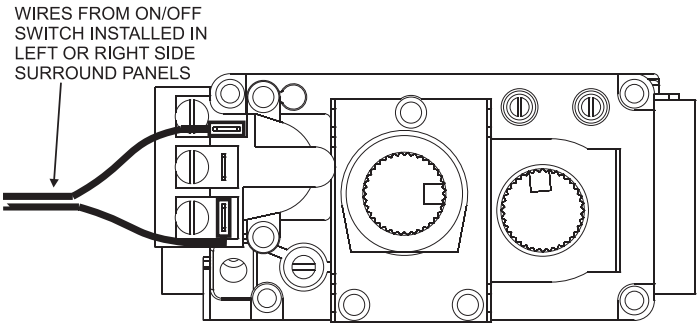

NOTE: TO OPERATE INSERT WITH SIDE PANEL ON/OFF SWITCH, BE SURE TO PLACE THE MAIN SWITCH (TO THE RIGHT SIDE OF GAS VALVE) TO "**OFF**" POSITION.

Figure 14

SURROUND PANEL INSTALLATION

INSTALLING THE TRIM SURROUNDS

Combustible materials MUST NEVER overlap onto the front face.

⚠ WARNING

WHEN FINISHING THE FIREPLACE INSERT, NEVER OBSTRUCT OR MODIFY THE AIR INLET/OUTLET LOUVERS ON THE FIREPLACE INSERT IN ANY MANNER.

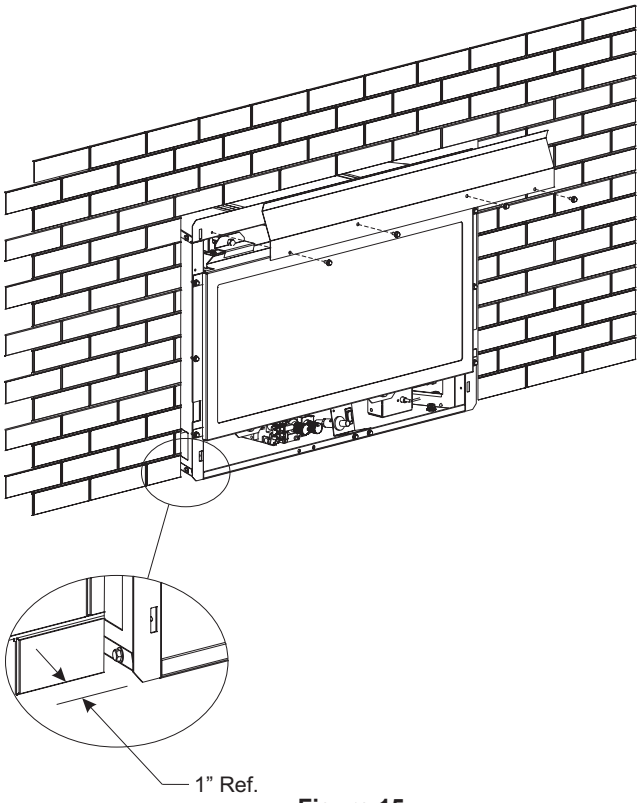

Figure 15

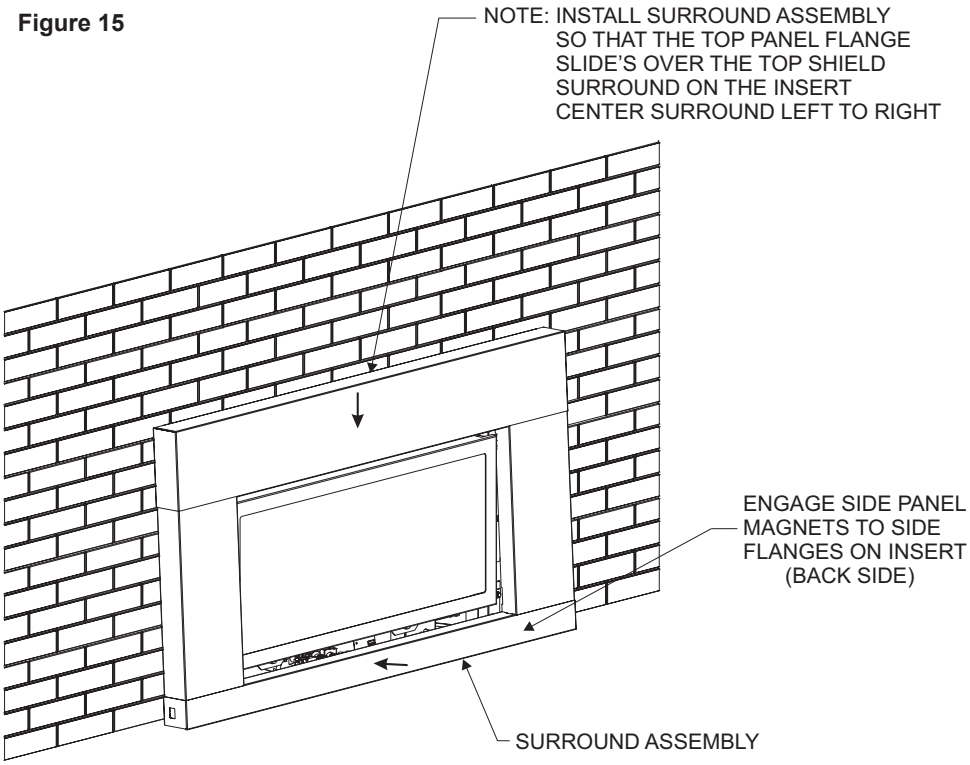

Figure 16

BLOWER ACCESSORY INFORMATION

The appliance, when installed must be electrically connected and grounded in accordance with local codes or, in the absence of local codes, with the current CSA C22.1 Canadian Electrical Code.

U.S. Installations, follow local codes and the National Electrical Code, ANSI/NFPA No. 70.

Should this blower require servicing, the power supply must be disconnected. For rewiring of any replacement components, refer to Figures 17 and 18 and the parts list on pages 32-33.

BLOWER ACCESSORY

Operation

The fireplace insert is equipped with a factory installed blower accessory that includes a fan control switch, plus a rheostat (speed control).

The speed control knob is located in the lower compartment at the right side of the insert.

From a cold start, the temperature activated fan control switch will normally take 5-10 minutes to heat up and energize the blower.

Once the blower is energized, adjust the blower speed control as desired.

When the insert is shut off, it may take 30-40 minutes for the heated unit to dissipate (cool down) enough for the blower to shut off automatically. ***NOTICE***: The blower shut off times will vary on blower speed and BTU input level setting control by adjustment of the HI/LO knob located on the gas valve.

Blower removal instructions

Servicing or removal of the blower system must be performed by a qualified service person.

If the blower assembly must be replaced, the following steps are recommended for removal:

1. Turn off gas and disconnect the electrical supply.
2. Remove the front surround panel assembly by pulling bottom forward, then upward to detach.
3. Release the two (2) spring latches at the top and two (2) spring latches at the bottom to remove the glass door assembly.
4. Remove decorative glass from burner cover if used.
5. Remove the 5/16” x 2-1/2” center bolt that retains the Vent Slide plate assembly.
6. Remove the insert from the fireplace cavity by pulling forward on the insert, and at the same time, sliding the vent plate rearward until disengaged.
7. As the insert is moved outward, the gas line may need to be disconnected at the insert shut off valve. If so, make sure the main gas line is shut off that supplies gas to the insert.
8. Once the insert is pulled out, the blower assembly can be removed by locating the (6) screws on the lower back of the insert that retains the blower base plate.
9. When the screws are removed, gently pull the blower assembly outward.
10. Disconnect the two ¼” wire terminals from the motor.
11. Remove the (4) screws that retain the blower assembly to the base plate, and set blower aside.
12. Install the replacement blower, and re-install the insert by reversing above steps.

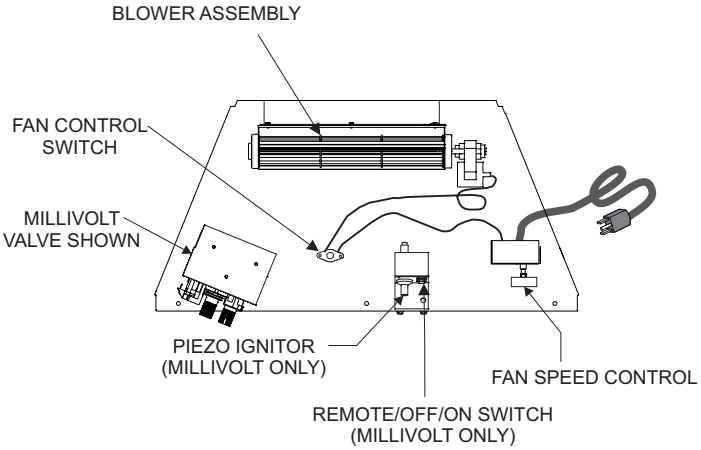

Figure 17

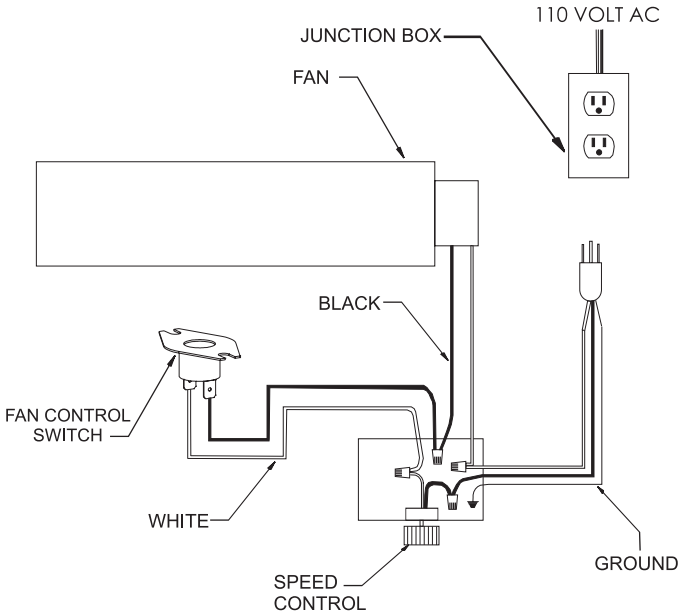

Figure 18

OPTIONAL DECORATIVE GLASS PLACEMENT

WARNING: Failure to position the parts in accordance with the diagrams and instructions below or failure to use only parts specifically approved for use with this heater may result in property damage or personal injury.

NOTE: The DVL Fireplace Insert may be operated with or without the Decorative glass accessory options. Follow the directions below should you choose to enhance your Loft Fireplace Insert with any one of the available decorative glass options.

DECORATIVE GLASS ACCESSORY PLACEMENT

The Decorative Glass options are available in various colors and package sizes. Choose the proper size kit for use with your particular Loft Fireplace Insert. See Page 31.

CAUTION: Use of gloves and eye protection is required while applying the decorative glass.

INSTALLATION

1. Application of the Decorative Glass should only be performed after the DVL Fireplace Insert has been fully installed, secured and tested for leaks. If operating the burner with a Remote Control, make sure all batteries are installed and that the burner operates with the remote correctly.

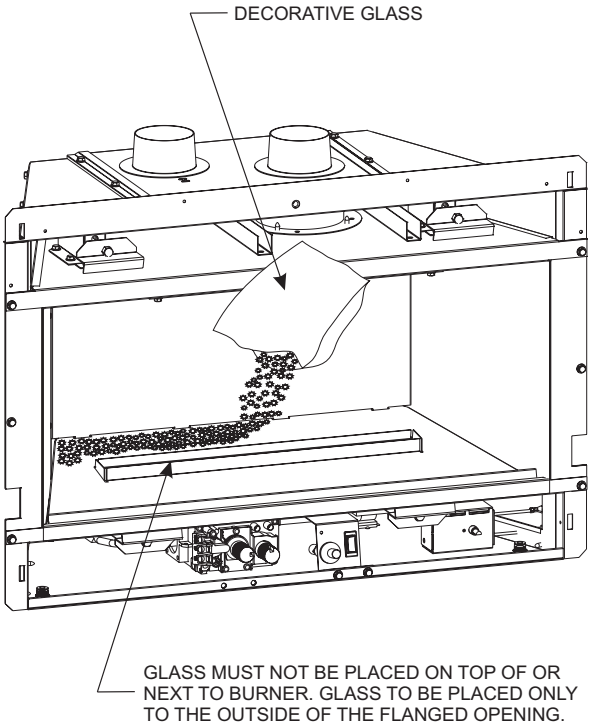

Figure 19

2. To install the Decorative Glass, cut off a corner of the plastic bag and proceed to apply the glass to the rear shelf on the Loft burner (area behind the burner). Apply only enough glass to the Top Cover to cover the black metal surfaces. Do not allow the glass to fall around the burner tube. See Figure 19. Apply the remaining decorative glass to the front sloped surface of the Top Cover. Start by placing the glass along the front edge of the top cover, then gradually place the glass up the sloped top until completely covered. Do not allow the glass to fall around the burner tube. See Figure 20.

CAUTION: Glass must not be placed on the burner.

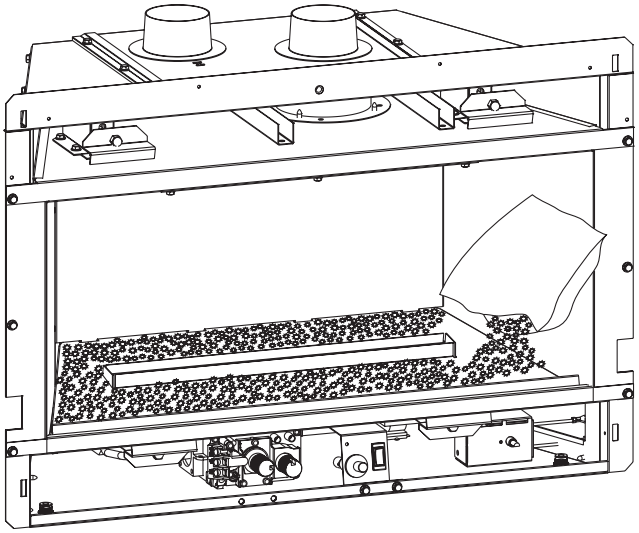

Figure 20

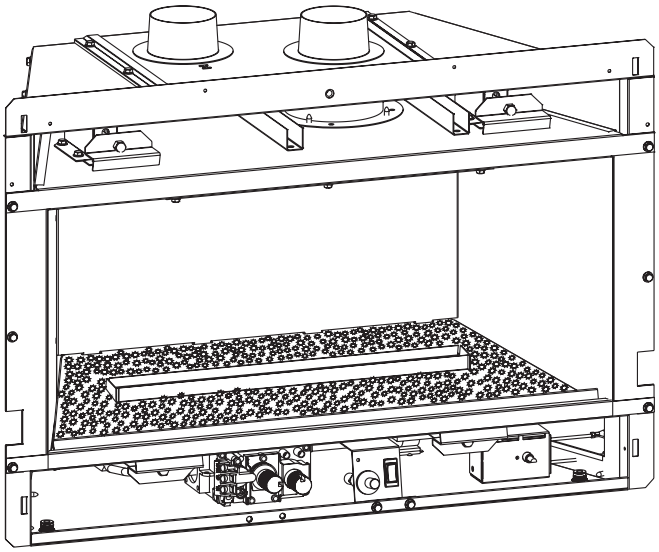

Figure 21

MILLIVOLT OPERATING INSTRUCTIONS

750 Millivolt System

The standing pilot (750 millivolt system) is a continuous burning pilot. The pilot remains ON even when the main burner is OFF.

When you ignite the pilot, the thermopile produces millivolts (electrical current) which energizes the magnet in the gas valve. After 30 seconds to 1 minute time period you can release the gas control knob and the pilot will stay ON. Allow your pilot flame to operate an additional one (1) to two (2) minutes before you turn the gas control knob from the PILOT position to the ON position. This time period allows the millivolts (electrical current) to build-up to a sufficient level allowing the gas control to operate properly.

1. Follow the SAFETY and LIGHTING INSTRUCTIONS for standing pilot controls found in this manual and on labels found in control compartment behind the door assembly.

⚠ WARNING

During the initial purging and subsequent lightings, never allow the gas valve control knob to remain depressed in the "pilot" position without pushing the piezo ignitor button at least once every second.

2. During the operating season, leave the control valve knob in the "ON" position. This will allow the pilot flame to remain lit. Turn the burner flame on or off with the fireplace REMOTE/OFF/ON switch, wall switch or remote controls.

***NOTICE*:** The gas control valve allows you to increase or decrease the height of the main burner flame. The control valve has a pressure regulator with a knob as shown in **Figure 22**. Rotate the knob clockwise to "HI" to increase the flame height and counterclockwise to "LO" to decrease the flame height.

3. When the operating season is over, turn the REMOTE/OFF/ON switch to "OFF" and the control valve to "OFF". The system, including the pilot light, will be shut down.

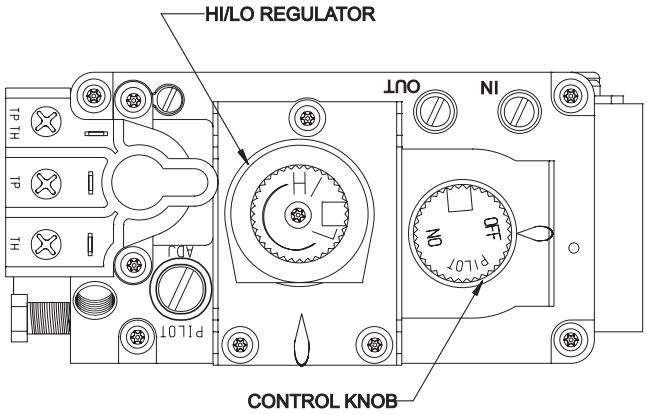

Figure 22

The OWNER should carefully read and follow these operating instructions at all times. Lower the door assembly to view the gas controls for the fireplace.

Initial Lighting

Upon completing the gas line or turning the gas valve on after it has been in the "OFF" position, a small amount of air will be in the lines. When first lighting the fireplace, it will take a few minutes for the lines to purge themselves of this air. Once the purging is complete, the fireplace will light and operate satisfactorily.

Subsequent lightings of the appliance will not require such purging if the gas valve is not turned to "OFF."

Pilot Flame

The thermopile/thermocouple (standing pilot) tips should be covered with flame.

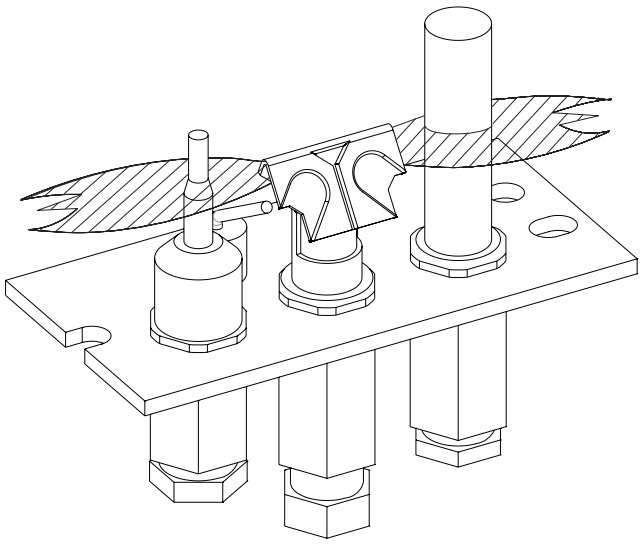

Figure 23

***NOTICE*:** During initial cold start-ups, it is recommended that the pilot be operated only for a period of 3 to 5 minutes (burner off) in order to encourage proper draft in the flue vent. Refer to the "Tall Vent Height" section on page 13 for additional information on adjustment of the flue baffle vent door in order ro imporve cold start-up conditions.

***NOTICE*:** On Propane (LP) gas models, when the burner shuts off, a small secondary flash may occur as the burner flame is extinguished. This is a normal occurence with LP gas and does not affect the performance or safety of the appliance.

STANDING PILOT LIGHTING INSTRUCTIONS

FOR YOUR SAFETY READ BEFORE LIGHTING

⚠ WARNING: If you do not follow these instructions exactly, a fire or explosion may result causing property damage, personal injury or loss of life.

A. This appliance has a pilot which must be lighted by hand. When lighting the pilot, follow these instructions exactly.

B. Before lighting smell all around the appliance area for gas. Be sure to smell next to the floor because some gas is heavier than air and will settle on the floor.

What To Do If You Smell Gas
- Do not try to light any appliance.
- Do not touch any electrical switch;
- Do not use any phone in your building.
- Immediately call your gas supplier from a neighbor's phone. Follow the gas supplier's instructions.
- If you cannot reach your gas supplier, call the fire department.

C. Use only your hand to push in or turn the gas control knob. Never use tools. If the knob will not push in or turn by hand, don't try to repair it; call a qualified service technician. Force or attempted repair may result in a fire or explosion.

D. Do not use this appliance if any part has been under water. Immediately call a qualified service technician to inspect the appliance and to replace any part of the control system and any gas control which has been under water.

LIGHTING INSTRUCTIONS

1. Stop! Read the safety information above.
2. Set REMOTE/OFF/ON switch to OFF.
3. Turn off all electric power to the appliance (if applicable).
4. Lower bottom louver assembly.
5. Push in gas control knob slightly and turn clockwise to "OFF."

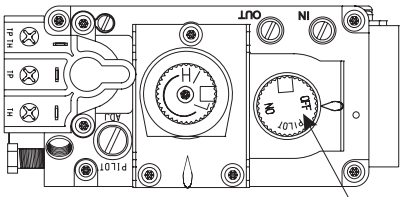

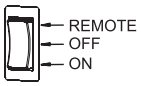

Note: Knob cannot be turned from "PILOT" to "OFF" unless knob is pushed in slightly. Do not force.

6. Wait ten (10) minutes to clear out any gas. Then smell for gas, including near the floor. If you then smell gas, STOP! Follow "B" in the safety information above. If you do not smell gas, go to the next step.
7. Find pilot - Follow metal tube from gas control. The pilot is behind the burner on the right side.
8. Turn gas control knob counterclockwise to "PILOT."

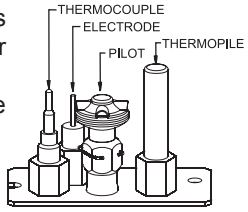

9. Push in control knob all the way and hold in. Repeatedly push the piezo ignitor button until the pilot is lit. Continue to hold the control knob in the for about one (1) minute after the pilot is lit. Release knob, and it will pop back up. Pilot should remain lit. If it goes out, repeat steps 5 through 9.
   - If the control knob does not pop up when released, STOP and IMMEDIATELY call a qualified service technician or gas supplier.
   - If the pilot will not stay lit after several tries, turn the gas control knob to "OFF" and call your service technician or gas supplier.
10. Turn gas control knob counterclockwise to "ON."
11. Close bottom louver assembly.
12. Turn on all electric power to the appliance (if applicable).
13. Set REMOTE/OFF/ON switch to desired setting.

TO TURN OFF GAS TO FIREPLACE

1. Set REMOTE/OFF/ON switch to OFF.
2. Turn off all electric power to the appliance if service is to be performed (if applicable).
3. Lower bottom louver assembly.
4. Push in gas control knob slightly and turn clockwise to "OFF." Do not force.
5. Close bottom louver assembly.

STANDING PILOT WIRING

For Standing Pilot Ignition Wiring

Appliance Requirements

> **⚠ WARNING**
>
> **DO NOT CONNECT 110-120 VAC TO THE GAS CONTROL VALVE OR THE APPLIANCE WILL MALFUNCTION AND THE VALVE WILL BE DESTROYED.**

Optional Wall Switch

Position the wall switch in the desired position on a wall. Run a maximum of 25 feet (7.8m) or less length of 18 A.W.G. minimum wire and connect it to the fireplace valve pigtails.

> **⚠ WARNING**
>
> **DO NOT CONNECT THE 110-120 VAC TO THE WALL SWITCH OR THE CONTROL VALVE WILL BE DESTROYED.**

> **⚠ WARNING**
>
> **LABEL ALL WIRES PRIOR TO DISCONNECTION WHEN SERVICING CONTROL. WIRING ERRORS CAN CAUSE IMPROPER AND DANGEROUS OPERATION. VERIFY PROPER OPERATION AFTER SERVICING.**

STANDING PILOT WIRING DIAGRAM

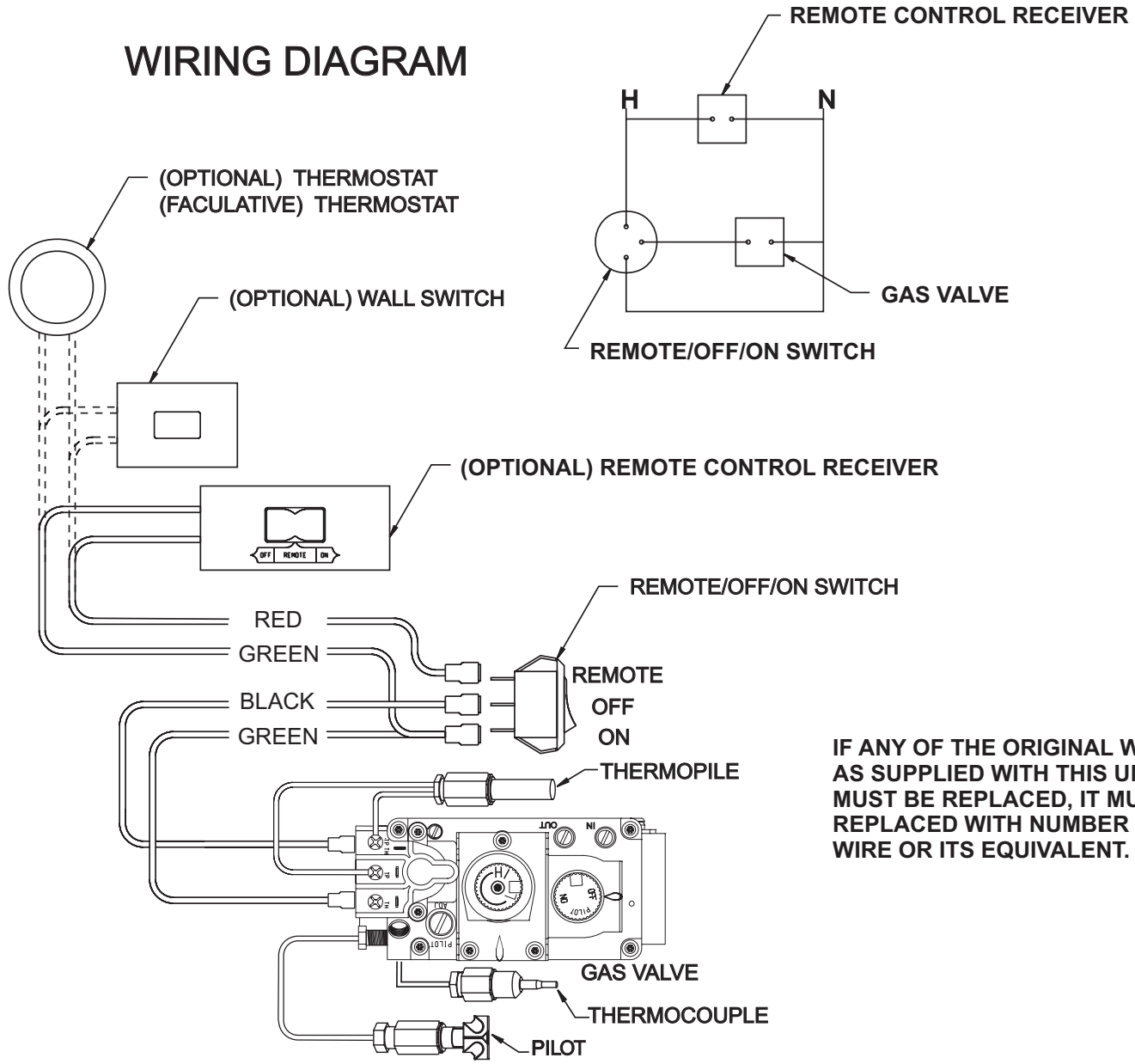

IF ANY OF THE ORIGINAL WIRE AS SUPPLIED WITH THIS UNIT MUST BE REPLACED, IT MUST BE REPLACED WITH NUMBER 18, 150°C WIRE OR ITS EQUIVALENT.

STANDING PILOT TROUBLESHOOTING

With proper installation and maintenance, your new Direct Vent Gas Fireplace will provide years of trouble-free service. If you do experience a problem, refer to the Trouble Shooting Guide below. This guide will assist a qualified service person in the diagnosis of problems and the corrective action to be taken.

1. **Spark ignitor will not light pilot after repeated triggering of piezo ignitor button.**
   a. Defective ignitor (no spark electrode)
      — Check for spark at electrode and pilot; if no spark and electrode wire is properly connected, replace ignitor.
   b. No gas or low gas pressure.
      — Check remote shut off valves from fireplace. Usually there is a valve near the main. There can be more than one (1) valve between the fireplace and main.
      — Low pressure can be caused by a variety of situations such as a bent line, too narrow diameter of pipe, or low line pressure. Consult with plumber or gas supplier.
   c. No LP in tank.
      — Check LP (propane) tank. Refill tank.
2. **Pilot will not stay lit after carefully following lighting instructions.**
   a. Defective thermocouple.
      — Check that pilot flame impinges on thermocouple. Clean and/or adjust pilot for maximum flame impingement.
      — Ensure the thermocouple connection at the gas valve is fully inserted and tight (hand tight plus 1/4 turn). Faulty thermocouple if reading is below specified minimum of 15 millivolts.
      — Disconnect the thermocouple from the valve, place one millivolt meter lead wire on the end of the thermocouple and the other millivolt meter lead wire on the thermocouple copper wire. Start the pilot and hold the valve knob in. If the millivolt reading is less than 15 millivolt, replace the thermocouple.
   b. Defective valve.
      — If thermocouple is producing more than 15 millivolts, replace faulty valve.
3. **Pilot burning, no gas to burner, valve knob "ON", REMOTE/OFF/ON switch "ON."**
   a. REMOTE/OFF/ON switch, wall switch, remote control or wires defective.
      — Check REMOTE/OFF/ON switch and wires for proper connections. Place jumper wires across terminal at switch. If burner comes on, replace defective switch. If OK, place jumper wires across switch wires at gas valve-if burner comes on, wires are faulty or connections are bad.
   b. Thermopile may not be generating sufficient millivolts.
      — If the pilot flame is not close enough physically to the thermopile, adjust the pilot flame.
      — Be sure the wire connections from the thermopile at the gas valve terminals are tight and the thermopile is fully inserted into the pilot bracket.
      — Check the thermopile with a millivolt meter. Take the reading at TH-TP & TP terminals of the gas valve. The meter should read 350 millivolts minimum, while holding the valve knob depressed in the PILOT position, with the pilot lit, and the REMOTE/OFF/ON switch in the OFF position. Replace the faulty thermopile if the reading is below the specified minimum.
      — With the pilot in the ON position, disconnect the thermopile leads from the valve. Take a reading at the thermopile leads. The reading should be 350 millivolts minimum. Replace the thermopile if the reading is below the minimum.
   c. Defective valve.
      — Turn valve knob to ON. Place REMOTE/OFF/ON switch to ON. Check with millivolt meter at thermopile terminals. Millivolt meter should read greater than 200 millivolts. If the reading is okay and the main burner does not ignite, replace the gas valve.
   d. Plugged main burner orifice.
      — Check main burner orifice for blockage and remove.
4. **Frequent pilot outage problem.**
   a. Pilot flame may be too high or too low, or blowing (high), causing pilot safety to drop out.
      — Clean and adjust flame for maximum flame impingement on the thermocouple. Follow lighting instructions carefully.
5. **The pilot and main burner extinguish while in operation.**
   a. No LP (Propane) in tank.
      Check LP (Propane) tank. Refill fuel tank.
   b. Inner vent pipe leaking exhaust gases back into system.
      — Check for leaks.
   c. Glass too loose, gasket leaks in corners after usage.
      — Be certain glass assembly is installed correctly.
   d. Horizontal vent improperly pitched.
      — The horizontal vent cap should slope down only enough to prevent any water from entering the unit. The maximum downwards slope is 1/4 inch.
   e. Bad thermopile or thermocouple.
      — Replace if necessary.
   f. Improper vent cap installation.
      — Check for proper installation and freedom from debris or blockage.
6. **Glass soots, and/or soot deposits collected internally.**
   a. Flame impingement on decorative glass.
      — Check and adjust glass positioning. See Page 16. Contact Empire Comfort Systems, Inc.
   b. Debris around throat of main burner.
      — Inspect the opening at the base of the main burner. It is imperative that NO material be placed in this opening.
7. **Flame burns blue and lifts off main burner.**
   a. Insufficient oxygen being supplied.
      — Check to make sure vent cap is installed properly and free of debris. Make sure that vent system joints are tight and have no leaks.
      — Check to make sure that no material has been placed at the main burner base.
   b. On taller vent heights (20-35 feet) it may help to open the small flue baffle vent located directly above the pilot. This will help maintain a positive vent draft and balance the required combustion air flow.

5.25 VDC ELECTRONIC CONTROL VALVE

The electronic control valve system includes the ability to switch the pilot from a standing pilot mode to an intermittent pilot mode.

- **IPI Mode** - In the Intermittent Pilot mode, when the unit is turned ON, it will cause spark to the pilot, light the pilot, then allow the burner to light. When the unit is turned to OFF, both the burner and pilot will be OFF.
- **CPI Mode** - In the Continuess Pilot mode, the pilot remains ON continuously even when the burner is turned OFF.

Note: A small toggle switch is located on the front of the module tray that is used to switch from IPI (left) to the CPI (right). **See Figure 24.**

When the unit is turned to ON, the electrical current will energize a spark to the pilot igniter. Once the pilot sensor heats up (after a few seconds), the valve will be energized, allowing gas to flow to the burner.

1. Follow the SAFETY and LIGHTING INSTRUCTIONS for Intermittent Pilot controls found in this manual, and on labels found in the control compartment located in the lower cavity of the appliance.
2. During the operating season (or in power outage periods), it is recommended that the pilot remain in the CPI (standing pilot mode) to reduce cold start issues, and/or conserve battery backup power during a power outage.
3. The gas valve has inlet and outlet pressure taps as shown in Figure 24. Refer to page 9 for gas pressure requirements.

Note: The gas control has a manual HI/LO flame adjustment knob (regulator) that allows you to increase or decrease the height of the burner flame. **See Figure 24.** Rotate the HI/LO knob counterclockwise to “HI” to increase the flame height, and clockwise to “LO” to decrease the flame height.

OPTIONAL REMOTE CONTROLS

Optional remote controls are available for use with this appliance. It is recommended that the remote receiver be placed either in a wall outlet box with extended wiring, on the fireplace hearth, behind the left side surround panel, or in the control compartment area as far forward in the insert as possible.

The placement options for the remote receiver are given to allow flexibility, however battery life will be extended when the receiver is placed in cooler areas.

To connect the remote receiver to the appliance, first disconnect the ON/OFF switch wires from the white and green wire connectors and connect the wires from the remote receiver to the green and white wire connectors. **See Figure 24.**

Follow the instructions included with the remote control for programming and other operational information.

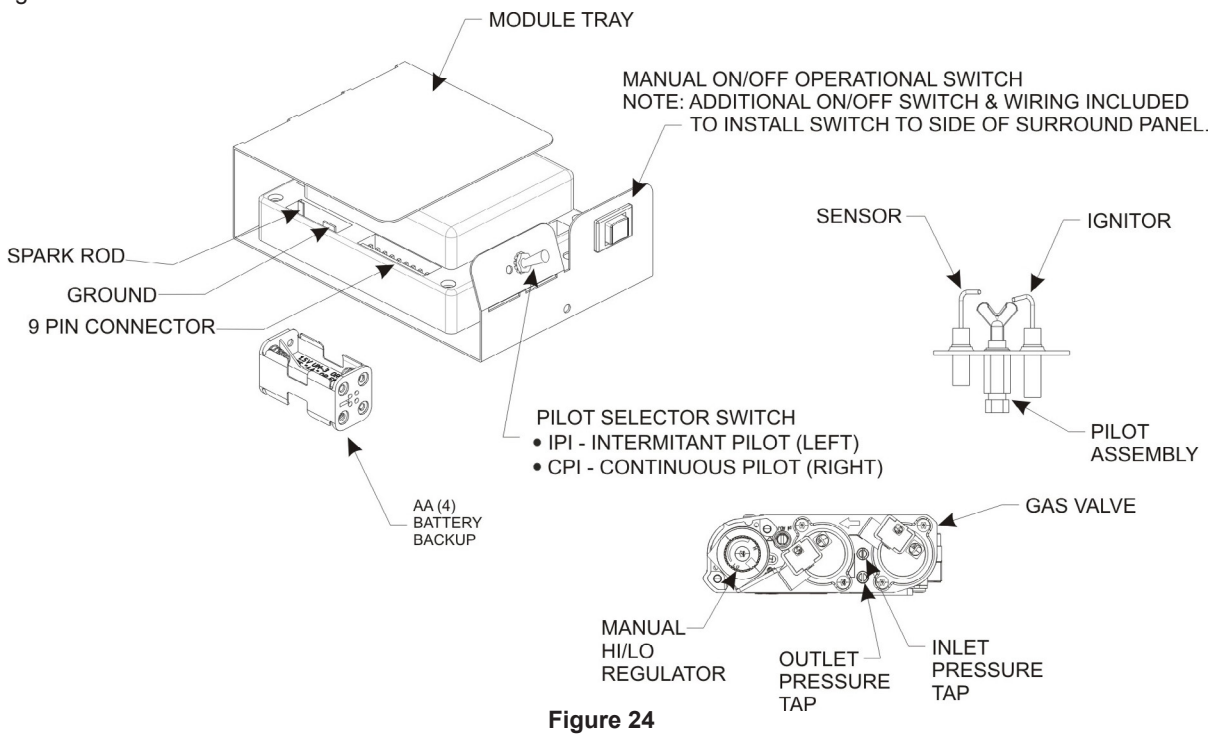

Figure 24

IPI ELECTRONIC SYSTEM WIRING DIAGRAM

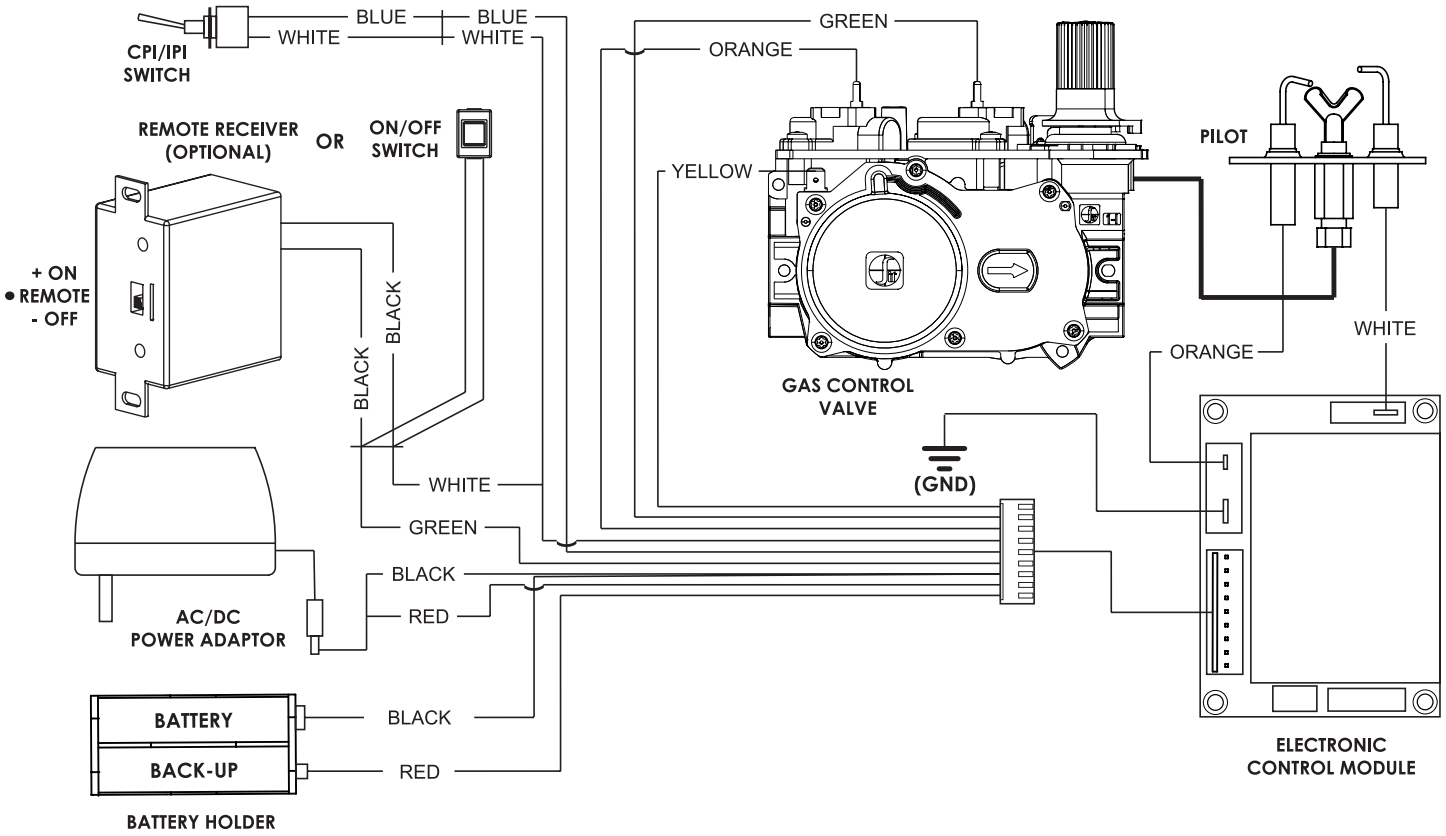

If any of the original wire as supplied with this unit must be replaced, it must be replaced with equivalent gauge and temperature rated wire.

This appliance is only for use with the type of gas indicated on the rating plate and may be installed in an aftermarket, permanently located, manufactured (mobile) home where not prohibited by local codes. This appliance is not convertible for use with other gases, unless a certified kit is used.

CAUTION: Do not operate the appliance with panel(s) removed, cracked or broken. Replacement of the panel(s) should be done by a licensed or qualified service person.

WARNING: Improper installation, adjustment, alteration, service or maintenance can cause property damage, personal injury or loss of life. Installation and service must be performed by a qualified installer, service agency or the gas supplier.

INTERMITTENT PILOT LIGHTING INSTRUCTIONS

FOR YOUR SAFETY READ BEFORE LIGHTING

⚠ WARNING: If you do not follow these instructions exactly, a fire or explosion may result causing property damage, personal injury or loss of life.

A. This appliance has a pilot which can be lighted with the manual on/off switch, a remote control, or by switching the receiver switch to the “ON” position. When lighting the pilot, follow these instructions exactly.

B. BEFORE LIGHTING smell all around the appliance area for gas. Be sure to smell next to the floor because some gas is heavier than air and will settle on the floor.
WHAT TO DO IF YOU SMELL GAS
Do not try to light any appliance. Do not touch any electrical switch. Do not use any phone in your building. Immediately call your gas supplier from a neighbor’s phone. Follow the gas supplier’s instructions. If you can not reach your gas supplier, call the fire department.

C. Use only the remote control or manual remote receiver switch to operate the gas valve. Never use tools. If valve does not operate, don’t try to repair it, call a qualified service technician. Force or attempted repair may result in a fire or explosion.

D. Do not use this appliance if any part has been under water. Immediately call a qualified service technician to inspect the appliance and to replace any part of the control system and any gas control which has been under water.

LIGHTING INSTRUCTIONS

1. STOP! Read the safety information above.
2. Turn OFF electric power to the appliance.
3. Remove front surround panel assembly or bottom louver if included.
4. Turn gas cock counterclockwise ↺ to “On” position.
5. Wait ten (10) minutes to clear out any gas. Then smell for gas, including near the floor. If you smell gas, STOP! Follow “B” in the safety information above on this page. If you do not smell gas, go to the next step.
6. Turn ON electric power to the appliance.
7. Find pilot - Follow metal tube from gas control. The pilot is behind the burner on the right side.
8. Turn main flame to on. If the pilot does not light within 60 seconds, stop and go to Step 5.
9. Refer to remote control instructions for detailed information, control features, and operation. Note: There is a CPI/IPI switch that allows for a continuous standing pilot mode or an intermittent pilot mode. See appliance manual for location of this switch. If the pilot or burner does not stay lit (in the standing pilot mode), stop and immediately call a qualified service technician or gas supplier.
10. If the burner or pilot does not operate properly after several tries, turn the gas cock clockwise ↻ to “OFF” and call your service technician or gas supplier.
11. Replace the front surround assembly or close bottom louver assembly.
12. Operation of the gas valve is controlled by a manual on/off switch or a hand held remote control. Refer to remote instructions for detailed operation information.

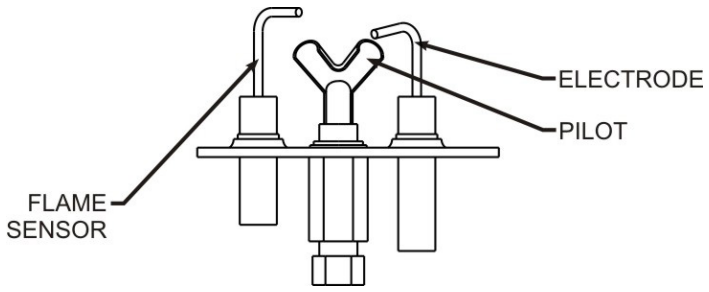

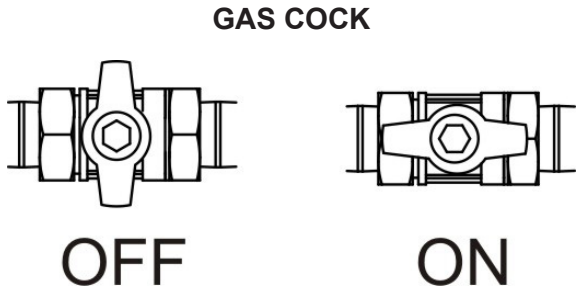

TO TURN OFF GAS TO FIREPLACE

1. Turn off all electric power to the appliance if service is to be performed (if applicable).
2. Gain access to control compart. Remove surround panel assembly if necessary.
3. Locate On/Off gas cock and turn clockwise to ↻ “OFF”. Do not force.
4. Close bottom louver assembly, if included.

INTERMITTENT PILOT CONTROL SYSTEM TROUBLESHOOTING

Brief Description of the Components

The gas valve is fitted with a manual HI/LO knob to allow for manual modulation of the gas outlet pressure to the appliance burner. The controls are designed to be used with either LPG or Natural Gas and can be converted by use of an OEM supplied conversion kit.

The Digital Fireplace Control (DFC) is an automatic gas ignition system based on a single microcontroller core. This control manages all functions related to ignition, flame sensing and supervision for atmospheric applications.

The DFC can be set to provide continuous or intermittent ignition control sequences and flame monitoring with safety shutdown in case of failure.

The DFC is set up as a stand alone (AC powered system with battery back up. See Lighting Instructions on page 25 and Wiring Diagram on page 24.

Troubleshooting

Before proceeding with the procedures in the following troubleshooting table, verify that the power supply (AC/DC adapter) is present and that the batteries inside the receiver and/or optional battery pack are fresh and installed with correct polarity.

Make sure all the connections between the wire harnesses and system components are proper and positive.

Verify that the static inlet pressure meets the manufacturer's recommended inlet pressure. If necessary adjust the line pressure regulator.

If the recommended actions for the following troubleshooting chart do not help to address the problem consider replacing wiring harnesses.

WARNING:
Any actions performed on the gas valve must be performed in accordance with this instruction manual. Likewise, any actions performed on the DFC or other system components must be done in accordance with the individual component instructions.
Replacement of components must be performed in accordance with this instructions manual.

INTERMITTENT PILOT CONTROL SYSTEM TROUBLESHOOTING

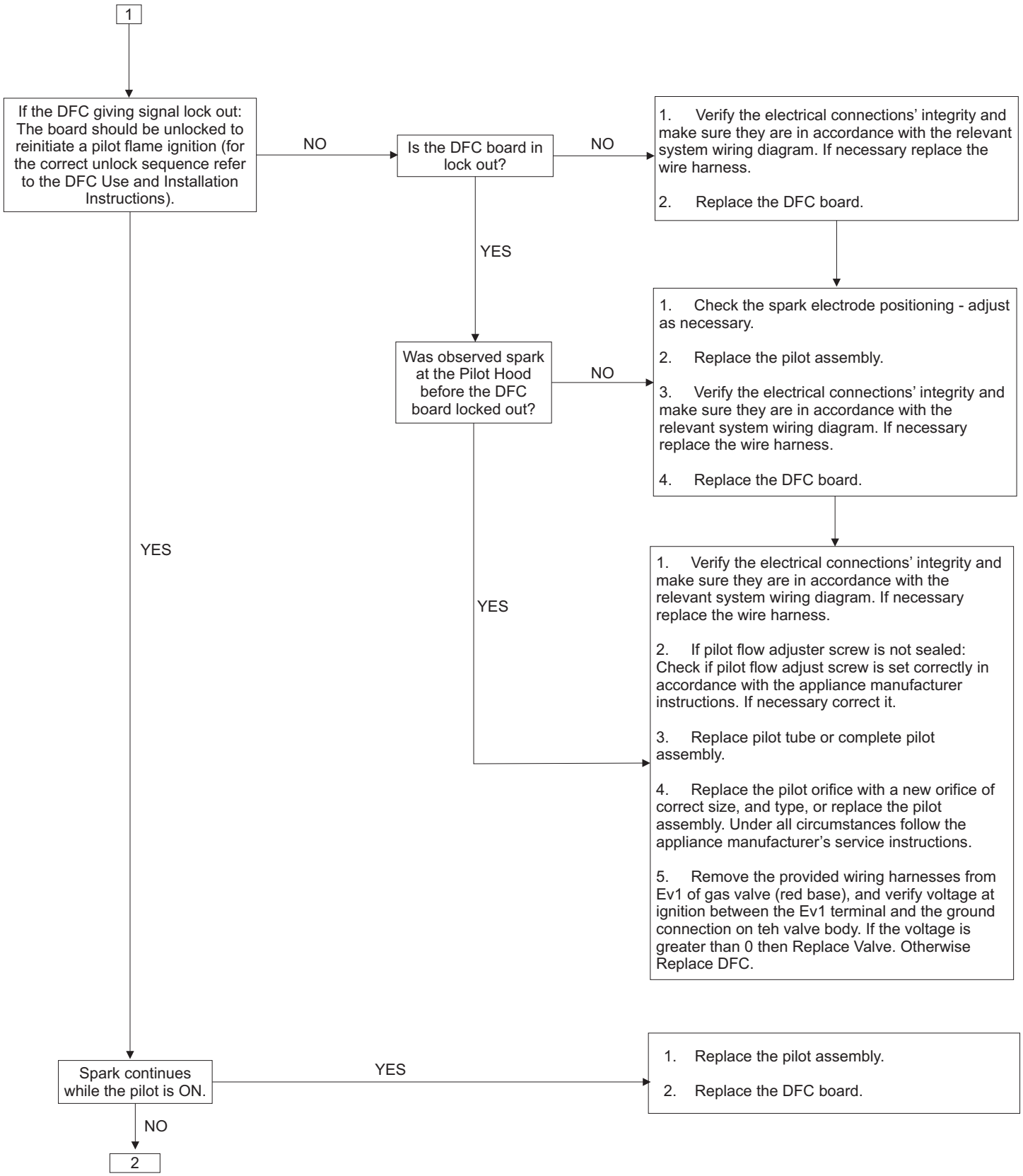

INTERMITTENT PILOT CONTROL SYSTEM TROUBLESHOOTING

2

Main burner lights when the pilot only should light.

YES →

1. Replace DFC board.
2. Replace the gas valve.

NO ↓

Pilot holds the flame?.

NO →

1. Verify the pilot flame fully engulfs the tip of the sense electrode. If not replace the pilot assembly.
2. Replace the pilot assembly.
3. Carefully clean the electrical connections of the sense cable, and the DFC board sense cable connection.
4. Replace the sense cable, or the cable-sense electrode assembly, or the pilot assembly.
5. Verify the pilot is properly grounded.
6. Replace the pilot orifice with a new orifice of correct size, and type, or replace the pilot assembly.
7. If pilot flow adjuster screw is not sealed, correct it.

YES ↓

Main burner ignites?

NO →

1. Verify the electrical connections' integrity and make sure they are in accordance with the relevant system wiring diagram. If necessary replace the wire harness.
2. Check if the optional remote transmitter is in "thermostat" or "on" mode and verifyt there is a call for heat (f using a thermostat remote). Adjust the setting for heat.
3. Verify that the pilot hood is properly fitted and a pilot flame is directed to properly ignite the main appliance burner.
4. Replace the main burner orifice with a new orifice of correct size and type, or replace the pilot assembly. Under all circumstances follow the service instructions.
5. Remove the provided wiring harnesses from EV2 of gas valve (red base), and verify voltage at ignition between the EV1 terminal and the ground connection on the valve body.
   5.1 If the voltage is greater than 0 then Replace Valve.
   5.2 Or Replace DFC.
6. Check the pressure at the outlet pressure test point out according to the manufacturer's instruction. If not in accordance, replace the gas valve.

YES ↓

Main burner remains ON

NO →

1. Verify the electrical connections' integrity and make sure they are in accordance with the relevant system wiring diagram. If necessary replace the wire harness.
2. Check the pressure at the outlet pressure test point out according the manufacturer's instruction. If not in accordance replace the gas valve.
3. With the system in the OFF position, connect the voltmeter between the EV2 terminal (green base) on the valve, and the ground on the valve body.
   Turn the system ON, let pilot light, and observe the following voltage sequence: once the pilot flame is proved, the voltage on EV2 should spike to approx. 5 VdC for approx. 2 sec and then drop to approx. 0.6 VdC continuously.
   3.1 If the sequence is respected, replace the gas valve.
   3.2 If the sequence is not respected, replace the DFC board.

↓

Main burner modulates properly?

→

1. Replace the main burner orifice with a new orifice of correct size (partial blockage possible). Verify that the main burner flame modulates. If it does not modulate replace the gas valve.
2. Verify that the gas valve outlet pressure limits are in accordance with the manufacturer specifications. If not replace the gas valve.

FOR MANUAL HI/LO VERSION

3. Verify the flame changes while rotating the HI/LO knob on the front of the gas valve. If there is no change replace the gas valve.

INSERT MAINTENANCE AND SERVICE

Although the frequency of servicing and maintenance will depend on use and the type of installation, you should have a qualified service technician perform an appliance checkup at the beginning of each heating season. Specific guidelines regarding each appliance maintenance task are listed below.

IMPORTANT: TURN OFF THE GAS BEFORE SERVICING YOUR APPLIANCE.

Cleaning Burner and Controls

Frequency: Once annually.

By: Qualified service technician.

Task: Brush or vacuum the control compartment, fireplace logs and burner areas surrounding the logs.

Checking Flame Patterns, Flame Height

Frequency: Periodically.

By: Qualified service technician/Home owner.

Task: Make a visual check of your fireplace's flame patterns.

Make sure the flames are steady - not lifting or floating. The thermopile/thermocouple (standing pilot) tips should be covered with flame. **See Figure 22.**

Checking Vent System

Frequency: Before initial use and at least annually thereafter, more frequently if possible.

By: Qualified service technician/Home owner.

Task: Inspect the external vent cap on a regular basis to ensure that no debris is interfering with the flow of air. Inspect entire vent system for proper function.

Cleaning

Use a soft brush attachment on a vacuum cleaner to gently remove dust or soot deposits from liners and burner.

Cleaning Glass Door

Frequency: After the first 3 to 4 hours of use. As necessary after initial cleaning.

By: Home owner.

Task: Remove and clean glass after the first 3 to 4 hours of use. After the initial cleaning, clean as necessary. Film deposits on the inside of the glass door should be cleaned off using a household glass cleaner.

⚠ CAUTION

DO NOT handle or attempt to clean the door when it is hot and DO NOT use abrasive cleaners.

Glass Door Replacement

Do not operate the fireplace insert if the high-temperature ceramic glass is cracked or broken.

Do not attempt to replace the ceramic glass panel. A complete replacement glass door assembly should be ordered as listed in the Parts List on pages 32-33, if needed.

Do not use substitute materials for replacement of glass door components.

Do not abuse the glass door by striking the glass.

Do not abuse the glass door by slamming or forcing the door shut.

When installing the glass door assembly, place the top door flange over the firebox top, center left to right, then gently swing the door bottom inward. Secure the door with the two (2) spring loaded door latches to the top door frame flange and the two (2) spring loaded door latches to the bottom door frame flange.

NOTICE: Prior to operating this unit, be sure to clean the interior porcelain coated liner panels and glass door with a soft clean cloth. Due to normal manufacturing processes, fingerprints along with excess sealing materials may be present and should be removed. When cleaning, do not use abrasives on the porcelain liners or the glass door assembly.

DECORATIVE ACCESSORIES

Decorative Fronts

Style	Model Number	Style	Model Number
Transom 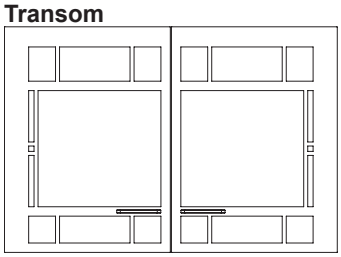	DVDB(25,33,35) D(BL,HP,SS) • Black • Hammered Pewter • Stainless Steel Note: Must also use a 3-sided or an Empire Comfort Systems Custom surround.	**Eclipse** 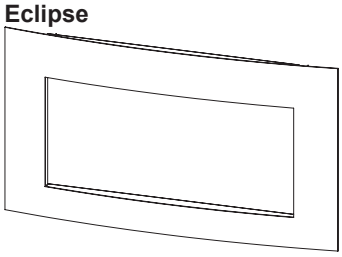	DVFQ(25,33,35)R(BL,HP,SS) • Black • Hammered Pewter • Stainless Steel Note: Must also use a 3-sided or an Empire Comfort Systems Custom surround.
Lancaster 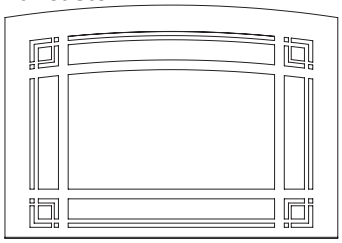	DVFQ(25,33,35) H(BL,HP,SS) • Black • Hammered Pewter • Stainless Steel Note: Must also use a 3-sided or an Empire Comfort Systems Custom surround.	**3 Sided Surround** 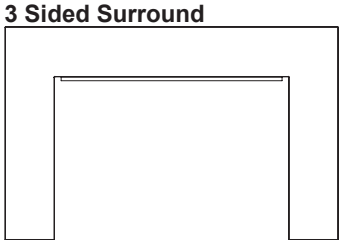	DS(25,33,35)661BL • Black

DECORATIVEACCESSORIES

The following accessory parts can be obtained from your Empire Comfort Systems dealer. If you need additional information beyond what your dealer can furnish, contact Empire Comfort Systems Inc., Nine Eighteen Freeburg Ave., Belleville, Illinois 62220.

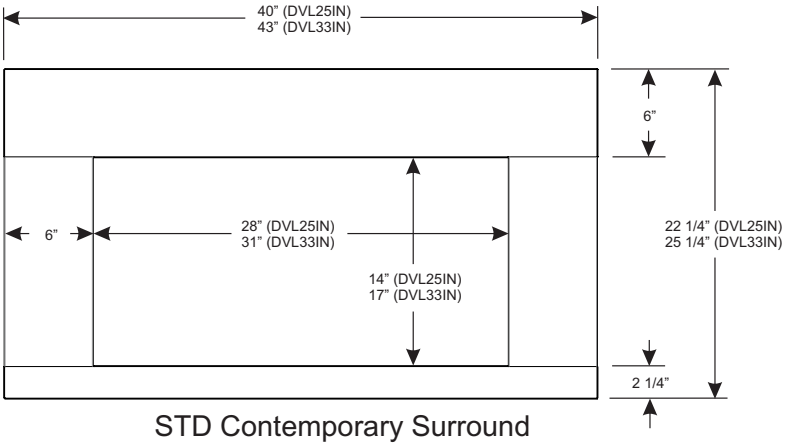

STD Contemporary Surround

- Black
- Black & Stainless

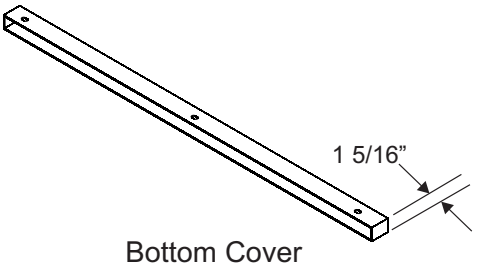

Bottom Cover

- Black
- Used to raise insert and surround panels when installed in a fireplace without a flush hearth extension. Can be used with contemporary surround kits.

OPTIONAL DECORATIVE GLASS ACCESSORIES

Contact your dealer for available optional decorative glass media recommended for use with the fireplace insert model. See below for the square foot area of the burner cover. Use the square foot area information as a guide to order the proper amount of media material recommended.

Model	Burner Cover Area (Sq. Ft.)
DVL25IN	1.25
DVL33IN	1.60

INSERT PARTS VIEW

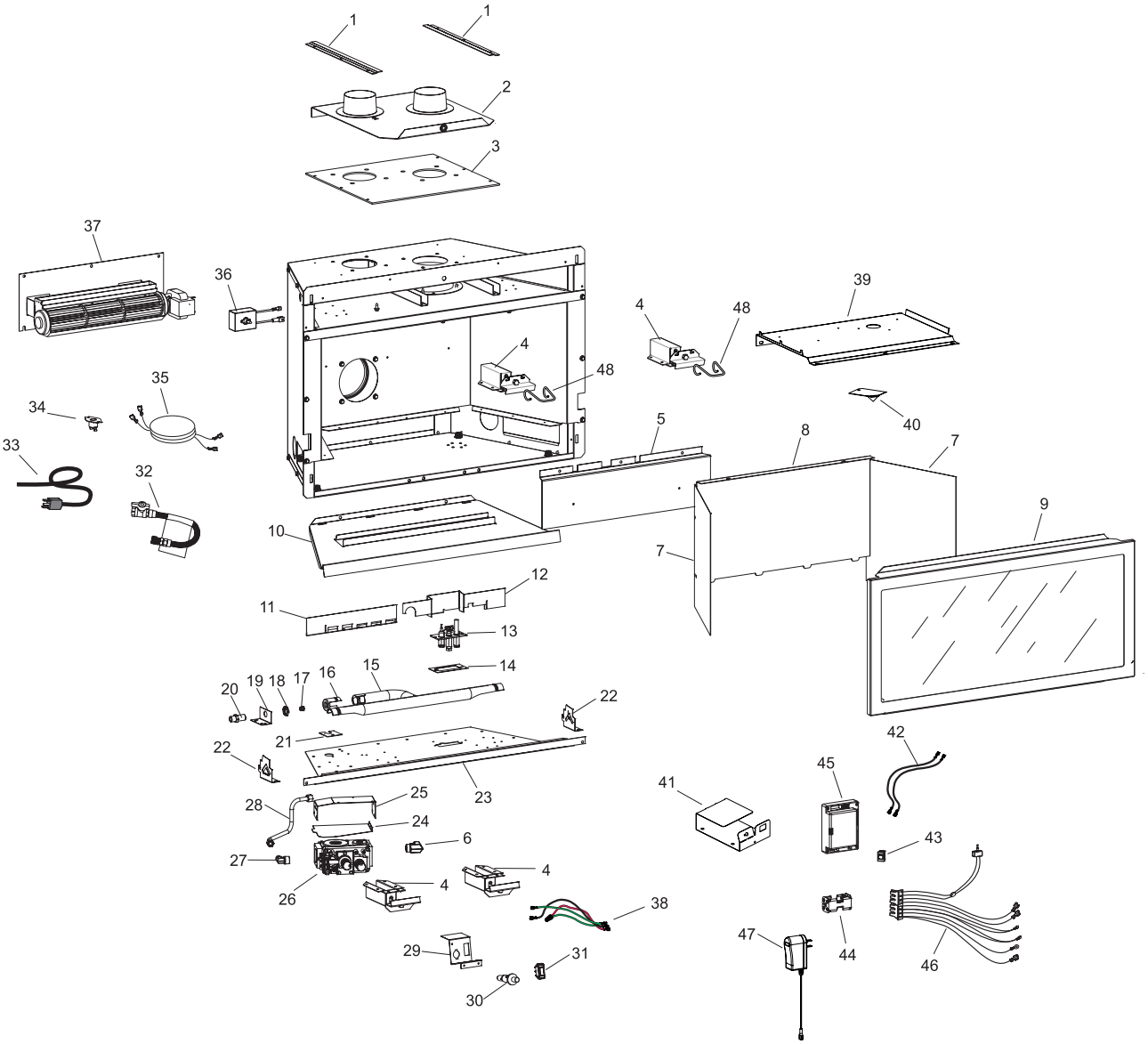

INSERT PARTS LIST

INDEX NO.	PART NUMBER				DESCRIPTION
	DVL25IN33	DVL33IN33	DVL25IN73	DVL33IN73	
1	22950	22950	22950	22950	FLUE CONNECTOR GUIDE
2	23309	23211	23309	23211	SLIDE PLATE ASSEMBLY
3	R9188	R9188	R9188	R9188	GASKET, TOP
4	16223	29057	16223	29057	SPRING RETAINER ASSEMBLY
5	27666	27691	27666	27691	LOG SHELF
6	R10882	R10882	R10882	R10882	ELBOW 90° BRASS - 3/8 NPT X 3/8 FLARE
7	27667BL	27678BL	27667BL	27678BL	LINER SIDE - PORCELAIN
8	27669BL	27680BL	27669BL	27680BL	LINER REAR - PORCELAIN
9	27712	27713	27712	27713	GLASS DOOR FRAME ASSEMBLY
10	27661BL	27688BL	277261BL	27688BL	BURNER COVER, PORCELAIN
11	27731	27856	27731	27856	RESTRICTOR, BURNER - LEFT

INSERT PARTS LIST

INDEX NO.	PART NUMBER				DESCRIPTION
	DVL25IN33	DVL33IN33	DVL25IN73	DVL33IN73	
12	27855	27857	27855	27857	RESTRICTOR, BURNER - RIGHT
13a	R10737	R10737	R10423	R10423	PILOT ASSEMBLY, PSE NAT
13b	R10738	R10738	R10424	R10424	PILOT ASSEMBLY, PSE LP
14	M173	M173	M173	M173	GASKET, PILOT
15	R10732	R10733	R10732	R10733	TUBE BURNER
16	R7624	R7624	R7624	R7624	AIR SHUTTER
17a	P310	-	P310	-	ORIFICE #2.20mm (NAT)
17b	P289	-	P289	-	ORIFICE 1.35mm (LP)
17c	-	P285	-	P285	ORIFICE #39 (NAT)
17d	-	P258	-	P258	ORIFICE 1.55mm (LP)
18	R7572	R7572	R7572	R7572	JAMB NUT
19	27086	27086	27086	27086	BURNER END SUPPORT
20	P212	P212	P212	P212	FITTING, ORIFICE
21	11269	11269	11269	11269	GAS LINE BRACKET
22	27662	27662	27662	27662	BURNER SUPPORT
23	27659	27686	30590	30592	BURNER BASE
24	28064	28064	30588	30588	VALVE, SHIELD
25	28063	28063	29400	29400	VALVE BRACKET
26a	R7577	R7577	R11125	R11125	VALVE, SIT - NAT
26b	R7578	R7578	R11126	R11126	VALVE, SIT - LP
27	R6207	R6207	R6207	R6207	ELBOW, 5/16 X 3/8 NPT 90°
28	27147	27672	30584	30584	TUBING ASSEMBLY - INLET
29	22953	22953	-	-	PIEZO BRACKET
30	R9760	R9760	-	-	PIEZO IGNITOR
31	R3436	R3436	-	-	SWITCH, REMOTE OFF/ON
32	R10961	R10961	R10961	R10961	FLEXLINE W/SHUT OFF VALVE
33	R2204	R2204	R2204	R2204	CORD SET
34	33411	33411	33411	33411	SWITCH ASSEMBLY
35	R9268	R9268	R9268	R9268	WIRE ASSEMBLY-SWITCH
36	18879	18879	18879	18879	RHEOSTAT ASSEMBLY
37	24925	24925	24925	24925	BLOWER SUB-ASSEMBLY (INCLUDES MOUNTING PLATE, PAD)
38	R3435	R3435	-	-	WIRE ASSEMBLY SWITCH
39	27660	27687	27660	27687	FIREBOX BAFFLE
40	27860	27860	27860	27860	PLATE, FIREBOX BAFFLE
41	-	-	29382	29382	TRAY, CONTROL MODULE
42	-	-	R2667	R2667	WIRE 5 1/2” BLACK (QTY. 2)
43	-	-	R2522	R2522	ON/OFF SWITCH
44	-	-	R11122	R11122	BATTERY HOLDER
45	-	-	R11127	R11127	DFC CONTROL BOARD
46	-	-	R11123	R11123	WIRE HARNESS
47	-	-	R11128	R11128	AC ADAPTOR, 7.0 VDC
48	R11181	R11181	R11181	R11181	LATCH EXTENSION (QTY 2)
N/S	R9212	R9212	R9212	R9212	BOLT, 5/16-18 X 2 1/2 HEX HEAD (QTY 4)
N/S	R11497	R11497	R11497	R11497	BOLT, 5/16-18 X 2/12 BUTTON HEAD
N/S	31255	31255	31255	31255	PLATE, INLET AIR RESTRICTOR

N/S - NOT SHOWN

USE ONLY MANUFACTURER’S REPLACEMENT PARTS. USE OF ANY OTHER PARTS COULD CAUSE INJURY OR DEATH.

MASTER PARTS DISTRIBUTOR LIST

To Order Parts Under Warranty, please contact your local Empire dealer. See the dealer locator at www.empirecomfort.com. To provide warranty service, your dealer will need your name and address, purchase date and serial number, and the nature of the problem with the unit.

To Order Parts After the Warranty Period, please contact your dealer or one of the Master Parts Distributors listed below. This list changes from time to time. For the current list, please click on the Master Parts button at www.empirecomfort.com. Please note: Master Parts Distributors are independent businesses that stock the most commonly ordered Original Equipment repair parts for Heaters, Grills, and Fireplaces manufactured by Empire Comfort Systems Inc.

Dey Distributing
1401 Willow Lake Boulevard
Vadnais Heights, MN 55101

Phone: 651-490-9191
Toll Free: 800-397-1339
Website: www.deydistributing.com
Parts: Heater, Hearth and Grills

Victor Division of F. W. Webb Company
200 Locust Street
Hartford, CT 06114

Phone: 860-722-2433
Toll Free: 800-243-9360
Fax: 860-293-0479
Toll Free Fax: 800-274-2004
Websites: www.fwwebb.com & www.victormfg.com
Parts: Heater, Hearth and Grills

East Coast Energy Products
10 East Route 36
West Long Branch, NJ 07764

Phone: 732-870-8809
Toll Free: 800-755-8809
Fax: 732-870-8811
Website: www.eastcoastenergy.com
Parts: Heater, Hearth and Grills

HOW TO ORDER REPAIR PARTS

Parts Not Under Warranty

Parts can be ordered through your Service Person, Dealer, or a Master Parts Distributor. See this page for the Master Parts Distributors list. For best results, the **service person or dealer** should order parts through the distributor. Parts can be shipped directly to the **service person/dealer**.

Warranty Parts

Warranty parts will need a proof of purchase and can be ordered by your Service Person or Dealer. Proof of purchase is **required** for warranty parts.

All parts listed in the Parts List have a Part Number. When ordering parts, first obtain the Model Number and Serial Number from the name plate on your equipment. Then determine the Part Number (**not** the Index Number) and the Description of each part from the following illustration and part list. Be sure to give all this information . . .

Appliance Model Number _____ Part Description _____

Appliance Serial Number _____ Part Number _____

Type of Gas (Propane or Natural) _____

Do not order bolts, screws, washers or nuts. They are standard hardware items and can be purchased at any local hardware store.

Shipments contingent upon strikes, fires and all causes beyond our control.

WARRANTY TERMS

Empire Comfort Systems Inc. warranties this hearth product to be free from defects at the time of purchase and for the periods specified below. Hearth products must be installed by a qualified technician and must be maintained and operated safely, in accordance with the instructions in the owner's manual. This warranty applies to the original purchaser only and is not transferable. All warranty repairs must be accomplished by a qualified gas appliance technician.

Limited Lifetime Parts Warranty – Combustion Chamber, Heat Exchanger, and Factory-Installed Glass

If the combustion chamber, heat exchanger (see parts list) or factory-installed glass fails because of defective workmanship or material, Empire will repair or replace at Empire's option.

Limited Three-Year Parts Warranty – All Other Components

(Except Remote Controls, Thermostats, Accessories and Replacement Parts)

Should any part fail because of defective workmanship or material within three years from the date of purchase, Empire will repair or replace at Empire's option..

Limited One-Year Parts Warranty – Remote Controls, Thermostats, Accessories, and Parts

Should any remote control, thermostat, accessory, or other part fail because of defective workmanship within one year from the date of purchase, Empire will repair or replace at Empire's option.

Duties Of The Owner

The appliance must be installed by a qualified installer and operated in accordance with the instructions furnished with the appliance.

A bill of sale, cancelled check, or payment record should be kept to verify purchase date and establish warranty period.

Ready access to the appliance for service.

What Is Not Covered

Damages that might result from the use, misuse, or improper installation of this appliance.

Travel, diagnostic costs and freight charges on warranted parts to and from the factory.

Claims that do not involve defective workmanship or materials.

Unauthorized service or parts replacements.

Removal and reinstallation cost.

Inoperable due to improper or lack of maintenance.

How To Get Service

To make a claim under this warranty, please have your receipt available and contact your installing dealer. Provide the dealer with the model number, serial number, type of gas, and purchase verification. The installing dealer is responsible for providing service and will contact the factory to initiate any warranted parts replacements. Empire will make replacement parts available at the factory. Shipping expenses are not covered.

If, after contacting your Empire dealer, service received has not been satisfactory, contact: Consumer Relations Department, Empire Comfort Systems Inc., PO Box 529, Belleville, Illinois 62222, or send an e-mail to info@empirecomfort.com with "Consumer Relations" in the subject line.

Your Rights Under State Law

This warranty gives your specific legal rights, and you may also have other rights, which vary from state to state.

Empire Comfort Systems Inc.
918 Freeburg Ave. Belleville, IL 62220

If you have a general question about our products, please e-mail us at info@empirecomfort.com.
If you have a service or repair question, please contact your dealer.

www.empirecomfort.com