This Owner's Manual is provided and hosted by Appliance Factory Parts.

Appliance Factory Parts
Experts in BBQ, Humidifier, & Appliance Parts
1-800-955-7075

White Mountain Hearth DVCX42FP30P-2 Owner's Manual

Shop genuine replacement parts for White Mountain Hearth DVCX42FP30P-2

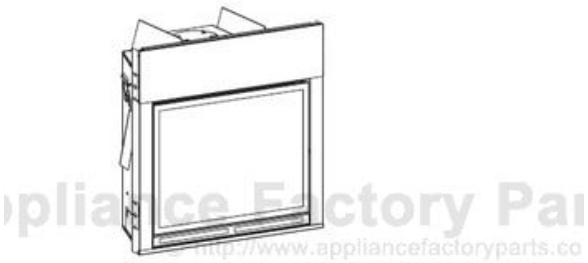

Find Your White Mountain Hearth Fireplace Parts - Select From 539 Models

-------- Manual continues below --------

INSTALLATION INSTRUCTIONS AND OWNER'S MANUAL

INSTALLER: Leave this manual with the appliance.
CONSUMER: Retain this manual for future reference.

⚠ WARNING

If not installed, operated and maintained in accordance with the manufacturer's instructions, this product could expose you to substances in fuel or from fuel combustion which can cause death or serious illness.

⚠ WARNING

If the information in these instructions are not followed exactly, a fire or explosion may result causing property damage, personal injury or loss of life.

- **Do not store or use gasoline or other flammable vapors and liquids in the vicinity of this or any other appliance.**
- **WHAT TO DO IF YOU SMELL GAS**
  - **Do not try to light any appliance.**
  - **Do not touch any electrical switch; do not use any phone in your building.**
  - **Immediately call your gas supplier from a neighbor's phone. Follow the gas supplier's instructions.**
  - **If you cannot reach your gas supplier, call the fire department.**
- **Installation and service must be performed by a qualified installer, service agency or the gas supplier.**

DIRECT VENT ZERO CLEARANCE GAS FIREPLACE HEATER MODEL SERIES:

MILLIVOLT (MV)
DVCX(36,42)FP30(N,P)-2

INTERMITTENT PILOT (IPI)
DVCX(36,42)FP70(N,P)-2

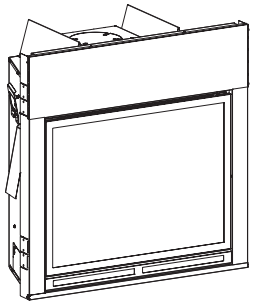

MH30033

GAS-FIRED
C UL US
LISTED

This appliance may be installed in an aftermarket, permanently located, manufactured home (USA only) or mobile home, where not prohibited by state or local codes.

This appliance is only for use with the type of gas indicated on the rating plate. This appliance is not convertible for use with other gases, unless a certified kit is used.

⚠ WARNING

HOT GLASS WILL CAUSE BURNS.
DO NOT TOUCH GLASS UNTIL COOLED.
NEVER ALLOW CHILDREN TO TOUCH GLASS.

A barrier designed to reduce the risk of burns from the hot viewing glass is provided with this appliance and shall be installed for the protection of children and other at-risk individuals.

Note: Barrier required, but may be sold separately.

NATIONAL FIREPLACE INSTITUTE
NFI
CERTIFIED
www.nficertified.org

We suggest that our gas hearth products be installed and serviced by professionals who are certified in the U.S. by the National Fireplace Institute® (NFI) as NFI Gas Specialists.

BEFORE YOU START

1. Read the safety information on Pages 64 - 65.
2. If located in the Commonwealth of Massachusetts, please note the special requirements on Page 66.
3. Where are you going to install the unit? See Pages 8-10 & 14.
4. Frame the opening. See Page 16.
5. Install the gas lines. See Page 13.
6. Install the wiring. See Pages 15, 46, and 53.
7. Install the venting. See Pages 11-12.
8. Install the fireplace. See Pages 16-19.
9. Connect the gas. See Page 13.
10. Connect the electricity. See Page 15.
11. Connect the venting system. See Page 20.
12. Install the optional remote system. See Page 46 for Millivolt Systems and Page 52 for Intermittent Pilot Systems.
13. Install the logs. See Page 32 - 43.
14. Light the fireplace and troubleshoot. See Pages 47 - 48 for Millivolt Systems and 54 - 57 for Intermittent Pilot Systems.
15. Install trim and other accessories. See Page 7.
16. Show the homeowner how to operate the fireplace.
17. Show the homeowner how to do the basic maintenance.

TABLE OF CONTENTS

SECTION	PAGE
All Appliances	**4-43**
Carton Contents	4
Introduction	5
Specifications	6
Hardware Package	7
Accessories	7
Fireplace Dimensions	8
Clearances	9-10
Combustible Material	10
Vent Termination Clearances	11-12
Gas Supply	13
Locating Fireplace	14
Electrical Considerations	15
Installation	16-19
Vent System Identification	20
Vent Systems	20
Venting Fireplace	21-23
Top Vent - Horizontal Termination	24
Top Vent - Vertical Termination	25
Vertical Termination	26-27
Framing and Finishing	28-29
DVVK-5F Flex Vent Instructions	30-31
Liner Placement	32
Glowing Embers	32
Log Identification	33
Log Placement	34-43
Millivolt System Appliances	**44-51**
Operating Instructions	44-45
Wiring Diagram	46
Lighting Instructions	47
Troubleshooting	48
Parts View	50
Parts List	51
Intermittent Pilot Appliances	**52-59**
Operating Instructions	52
Wiring Diagram	53
Lighting Instructions	54
Troubleshooting	55-57
Parts View	58
Parts List	59
All Appliances	**60-68**
Fireplace - All Units Parts View	60
Fireplace - All Units Parts List	61
Maintenance and Service (Screen & Glass Removal)	62-63
Important Safety Information	64
Safety Information for Users of LP Gas	65
Requirements for Massachusetts	66
Master Parts Distributor List	67
How To Order Repair Parts	67
Warranty	68

CARTON CONTENTS

DVCX(36,42)FP3 SERIES

INDEX NUMBER	DESCRIPTION	QTY SUPPLIED
1	Rock Wool	2
2	Receptical Cover	1
3	Receptical	1
4	Flue Restrictor Assembly - NAT or LP	1
5	Hardware Pack	1
Not Shown	Log Set (see Page 33)	1 set
Not Shown	Fireplace	1
Not Shown	Accessory Sheet	1
Not Shown	Product Registration Card	1

See Parts Lists on Pages 50 - 51 and 58 - 62 for ordering replacement parts. Do not order batteries, bolts, screws, washers or nuts. They are standard hardware items and can be purchased at any local hardware store.

DVCX(36,42)FP7 SERIES

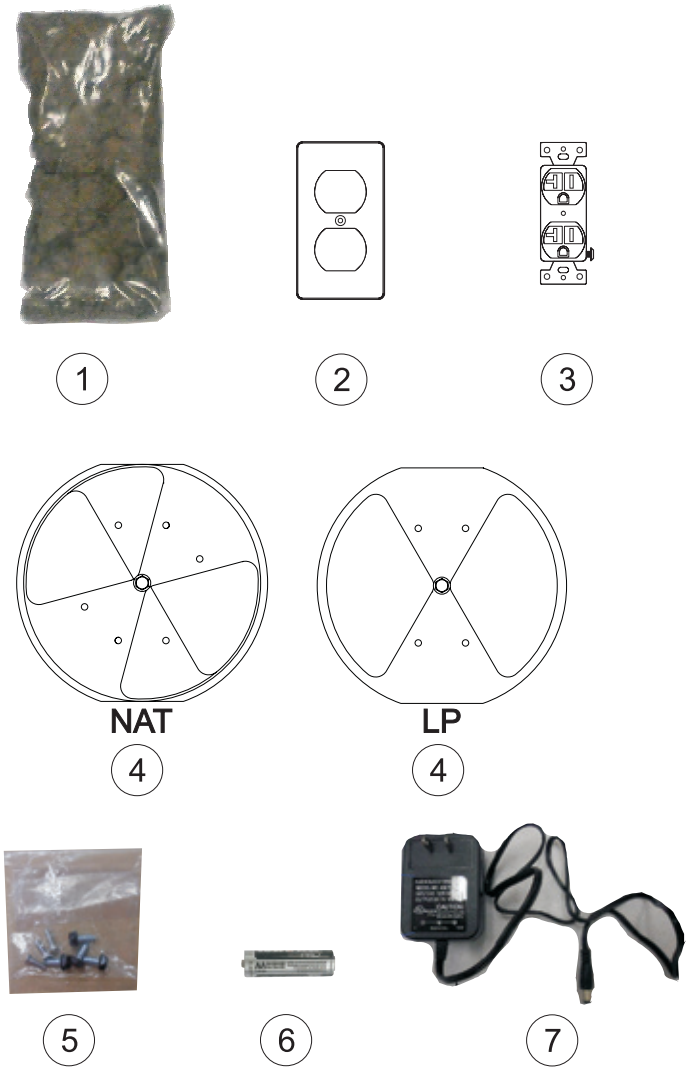

INDEX NUMBER	DESCRIPTION	QTY SUPPLIED
1	Rock Wool	2
2	Receptical Cover	2
3	Receptical	2
4	Flue Restrictor Assembly - NAT or LP	1
5	Hardware Pack	1
6	AA Battery	4
7	AC Adaptor	1
Not Shown	Log Set (see Page 33)	1 set
Not Shown	Fireplace	1
Not Shown	Accessory Sheet	1
Not Shown	Product Registration Card	1

See Parts Lists on Pages 50 - 51 and 58 - 62 for ordering replacement parts. Do not order batteries, bolts, screws, washers or nuts. They are standard hardware items and can be purchased at any local hardware store.

INTRODUCTION

Instructions to Installer

1. Installer must leave instruction manual with owner after installation.
2. Installer must have owner fill out and mail product registration card supplied with the fireplace.
3. Installer should show owner how to start and operate the fireplace.

This direct vent gas fireplace heater is designed to operate with all combustion air being siphoned from the outside of the building and all exhaust gases expelled to the outside of the building. The information contained in this manual pertains to all models and gas control systems unless otherwise noted.

Appliance Certification

⚠ WARNING
This unit is not for use with solid fuels.

This fireplace is design certified in accordance with American National Standard/CSA Standard ANSI Z21.88/CSA 2.33 and by Underwriters Laboratories as a Direct Vent Gas Fireplace Heater and shall be installed according to these instructions.

Consult your local building code agency, prior to installation, to ensure compliance with local codes-including permits and inspections.

The fireplace, when installed, must be electrically grounded in accordance with local codes or, in absence of local codes, with the *National Electric Code ANSI/NFPA 70* or Canadian Electric code, CSA C22.1, if an external electrical source is utilized.

These models may be installed in a bedroom or bed-sitting room in the U.S.A. and Canada.

Qualified Installing Agency

Installation and replacement of gas piping, gas utilization equipment or accessories and repair and servicing of equipment shall be performed only by a qualified agency. The term "qualified agency" means any individual, firm, corporation or company which either in person or through a representative is engaged in and is responsible for (a) the installation or replacement of gas piping or (b) the connection, installation, repair or servicing of equipment, who is experienced in such work, familiar with all precautions required and has complied with all the requirements of the authority having jurisdiction.

State of Massachusetts: The installation must be made by a licensed plumber or gas fitter in the Commonwealth of Massachusetts.

⚠ WARNING
ANY CHANGE TO THIS FIREPLACE OR ITS CONTROLS CAN BE DANGEROUS. Improper installation or use of the fireplace can cause serious injury or death from fire, burns, explosions, or carbon monoxide poisoning.

The installation must conform with local codes or, in the absence of local codes, with the *National Fuel Gas Code ANSI Z223.1/NFPA 54* Natural Gas and Propane Installation Code, or CSA B149.1 in Canada.* **Available from the American National Standards Institute, Inc. 11 West 42nd St., New York, N.Y. 10036.*

Any alteration of the original design, installed other than as shown in these instructions or use with a type of gas not shown on the rating plate is the responsibility of the person and company making the change.

Important

All correspondence should refer to complete Model Number, Serial Number and type of gas.

High Altitude

When installing this unit at an elevation above 2000 feet (in the United States) it may be necessary to decrease the input rating by changing the existing burner orifice to a smaller size. Generally, input should be reduced 4 percent for each 1000 feet above sea level. However, if the heating value of the gas has been reduced, this general rule may not apply. Check with Empire Comfort Systems for proper orifice size identification.

Canadian High Altitude

Altitude: 0-4500 feet (0-1370 m)

When installing this unit at an elevation above 4500 feet (in Canada), check with Empire Comfort Systems.

Consult your Empire Comfort Systems for assistance in determining the proper orifice for location.

Preparation

This direct vent gas fireplace and its components are tested and safe when installed in accordance with this Installation Manual. Report to your dealer any parts damaged in shipment, specifically check glass condition. Do not install unit with damaged, incomplete, or substitute parts. Read all instructions before starting installation and follow these instructions carefully during installation to insure maximum benefit and safety. Failure to follow them will void your warranty and may present a fire hazard.

The warranty will be voided by, and the warranter disclaims any responsibility for the following actions:

- Installation of any damaged fireplace or vent system component.
- Modification of the fireplace or direct vent system.
- Installation other than as instructed by Empire Comfort Systems Inc.
- Improper positioning of the logs, glass door or decorative rock.
- Installation and/or use of any component part not manufactured or approved by manufacturer.

SPECIFICATIONS

	DVCX36NAT	DVCX36LP	DVCX42NAT	DVCX42LP
Input BTU/Hr Maximum	37,000	34,000	40,000	36,000
Input BTU/Hr Minimum	26,000	27,000	27,000	29,000
KWH (Maximum)	10.84	9.96	11.72	10.55
KWH (Minimum)	7.62	7.91	7.91	8.5
Orifice (Front / Rear)	47 / 42	58 / 1.45	44 / 40	57 / 1.45
Air Shutter Opening	3/16	FULL OPEN	3/16	FULL OPEN
Height without standoff	36-7/8	36-7/8	36-7/8	36-7/8
Width	39-5/16	39-5/16	43-5/16	43-5/16
Depth	21-1/16	21-1/16	21-1/16	21-1/16
Gas Inlet Shutoff Valve (pipe)	1/2 NPT	1/2 NPT	1/2 NPT	1/2 NPT
Vent Size	5 x 8	5 x 8	5 x 8	5 x 8

NOTE: Air shutter settings are factory minimum settings. Some venting configurations may require minor air shutter adjustments for optimum performance.

NOTE: The glass used in your fireplace is ceramic glass. If the glass is cracked or damaged in any way, it should be replaced only with a complete glass frame assembly from Empire. See parts list on Pages 60 - 61 for ordering.

GAS SUPPLY PRESSURES			
GAS TYPE	MAXIMUM	MINIMUM	MANIFOLD
NAT	14	4.5	3.5
LP	14	11	10

NOTE: For gas pipe dimensions, see Page 13.

HARDWARE PACKAGE

DVCX(36,42)FP(3,7) SERIES

HEX HEAD SCREW 10 X 1/2

ACCESSORIES

The following accessory parts can be obtained from your Empire Comfort Systems dealer. Contact your Empire Dealer for more accessory options. If you need additional information beyond what your dealer can furnish, contact Empire Comfort Systems Inc., 918 Freeburg Ave., Belleville, Illinois 62220-2623.

MODEL NUMBER	DESCRIPTION	USED ON
DF362NB	Beveled Window Frame, Brushed Nickel	DVCX36
DF422NB	Beveled Window Frame, Brushed Nickel	DVCX42
DF362BZ	Beveled Window Frame, Oil Rubbed Bronze	DVCX36
DF422BZ	Beveled Window Frame, Oil Rubbed Bronze	DVCX42
DVD36XBLNB	Decorative Door, Brushed Nickel	DVCX36
DVD42XBLNB	Decorative Door, Brushed Nickel	DVCX42
DVP36XRB	Ceramic Fiber Liner, Rustic Brick	DVCX36
DVP42XRB	Ceramic Fiber Liner, Rustic Brick	DVCX42
DVP36XWS	Ceramic Fiber Liner and Floor, Old World Stone	DVCX36
DVP42XWS	Ceramic Fiber Liner and Floor, Old World Stone	DVCX42
DVP36XKR	Reflective Liner, Black	DVCX36
DVP42XKR	Reflective Liner, Black	DVCX42
DVF36XKR	Reflective Floor, Black	DVCX36
DVF42XKQ	Reflective Floor, Black	DVCX42
FBB10	Blower, Auto Variable Speed	DVCX(36,42)
LK6	Lighting Kit, 120V	DVCX(36,42)
DCA1ABL	Decorative Forged Andirons, Black	DVCX(36,42)

REMOTE CONTROL ACCESSORIES	DESCRIPTION	MODELS USED ON
FRBC	Battery Remote ON/OFF	DVCX(36,42)FP(3,7)
FRBTC	Battery Remote Thermostat	DVCX(36,42)FP(3,7)
TMW	Wireless Wall Thermostat	DVCX(36,42)FP(3,7)
TRW	Reed Switch Wall Thermostat	DVCX(36,42)FP(3,7)
FWS-1	Wall Switch	DVCX(36,42)FP(3,7)
FRBTP	Battery Operated Remote Control with Programmable Thermostat	DVCX(36,42)FP(3,7)
RVKN-1	Remote Kit, Nat (Stepper Motor) - IP Appliances Only	DVCX(36,42)FP7N
RVKP-1	Remote Kit, LP (Stepper Motor) - IP Appliances Only	DVCX(36,42)FP7P

CONVERSION KITS	DESCRIPTION	USED ON
33768	Conversion Kit, DV (Natural to Propane)	DVCX36FP30
33769	Conversion Kit, DV (Propane to Natural)	DVCX36FP30
33770	Conversion Kit, DV (Natural to Propane)	DVCX42FP30
33771	Conversion Kit, DV (Propane to Natural)	DVCX42FP30
32941	Conversion Kit, DV (Natural to Propane)	DVCX36FP30
32942	Conversion Kit, DV (Propane to Natural)	DVCX36FP30
32943	Conversion Kit, DV (Natural to Propane)	DVCX42FP30
32944	Conversion Kit, DV (Propane to Natural)	DVCX42FP30

FIREPLACE DIMENSIONS

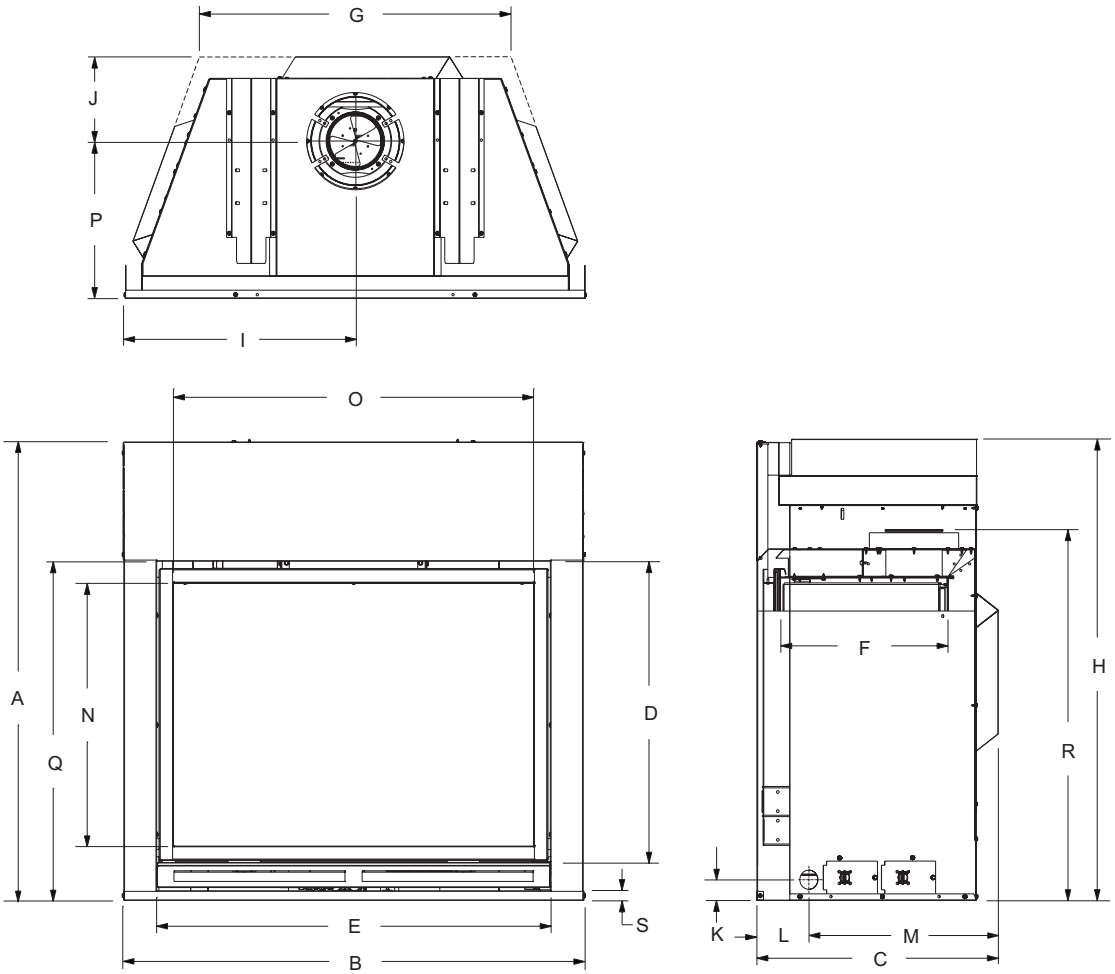

INDEX LETTER	DIMENSION DESCRIPTION	DIMENSIONS (in inches)	
		DVCX36FP	DVCX42FP
A	The maximum height of firebox face (excluding standoffs)	41-7/8	41-7/8
B	The maximum width of the firebox face (excluding nailing flanges)	42-1/4	46-1/4
C	The maximum depth of the firebox	22-1/16	22-1/16
D	The height of the firebox opening	27-1/2	27-1/2
E	The width of the firebox opening	35-9/16	39-15/16
F	The interior depth of the firebox	15-1/4	15-1/4
G	The rear exterior width of the firebox	28-3/8	32-3/8
H	The height to the firebox standoffs	42-1/8	42-1/8
I	Width from the left side of the box to the centerline of vent	19-1/8	23-1/8
J	Depth from back of box to centerline of top vent	7-11/16	7-11/16
K	Height from the bottom of the box to the gas line opening	2	2
L	Depth from the front of the box to gas line opening	11-3/16	11-3/16
M	Depth from rear of box to gas line opening	10-7/8	10-7/8
N	Glass frame opening height	24	24
O	Glass frame opening width	32-7/8	36-7/8
P	Depth from front of box to centerline of vent	14-3/8	14-3/8
Q	Distance from floor to fireplace opening	31	31
R	Height from floor to vent collar	33-9/16	33-9/16
S	Maximum hearth size	1	1

CLEARANCES

Clearance to Combustibles	
Back Stand-off	0" (0 mm)
Side Stand-off	0" (0 mm)
Floor	0" (0 mm)
Top Stand-off	0" (0 mm)
Top Framing Edge	6” (152 mm)

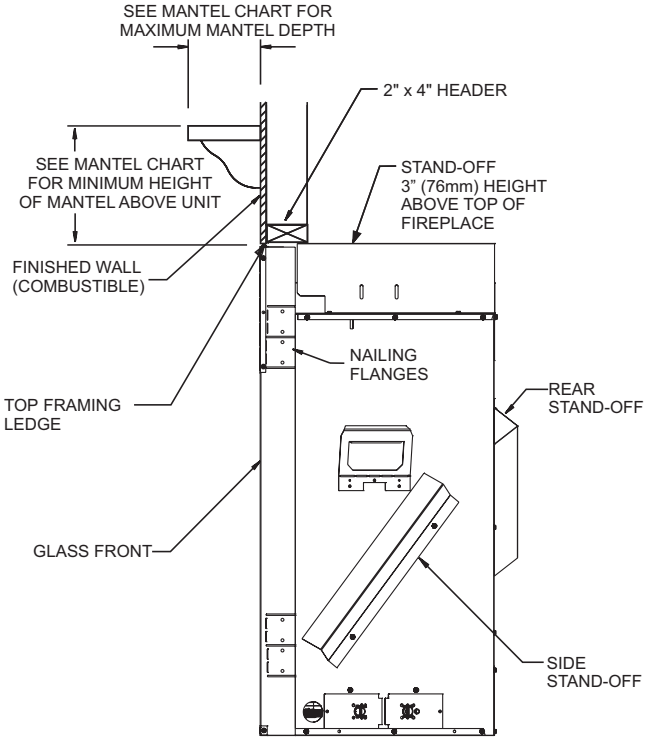

Figure 1
Note: Generic Firebox shown.

Mantel Chart

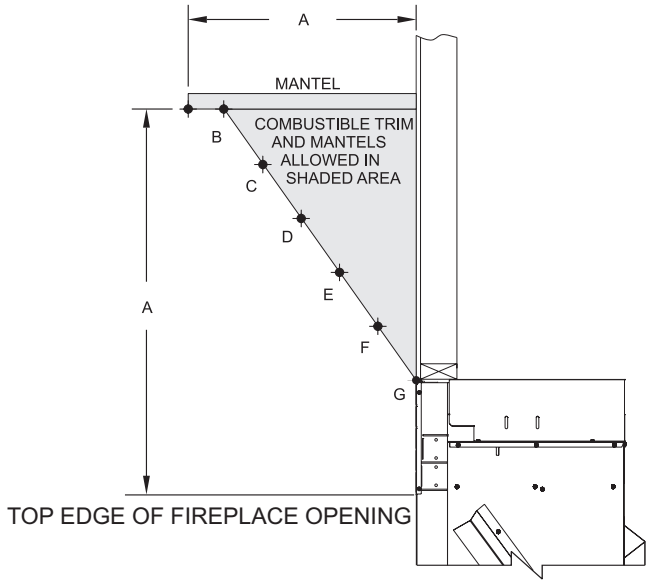

INDEX LETTER	DIMENSIONS (in inches)	
	DISTANCE FROM TOP EDGE OF FIREPLACE OPENING (HORIZONTAL)	DISTANCE FROM FIREPLACE FRONT (VERTICAL)
A	12	25-1/2
B	10	25-1/2
C	8	23-3/4
D	6	22-1/8
E	4	20-3/8
F	2	18-3/4
G	0	17

Figure 2

CLEARANCES

Clearances

⚠ WARNING
This fireplace is not been tested nor approved to have a television or other electrical appliance installed above it.

Clearance from bottom of fireplace to ceiling is 84”
Clearance from side of fireplace to adjacent sidewall is 6”.

Television Considerations
Installing a television above a fireplace has become increasingly popular; however, the area above any fireplace gets hot and most TV manufacturers recommend against placing their products near a heat source.
If you install a television above this fireplace, Empire Comfort Systems accepts no responsibility for damage or injuries. Follow the television manufacturer’s installation instructions, including any recommendations regarding proximity to heat sources.
If you have a TV above your fireplace, turn off the fireplace and let it cool completely before servicing or touching any buttons on the TV.

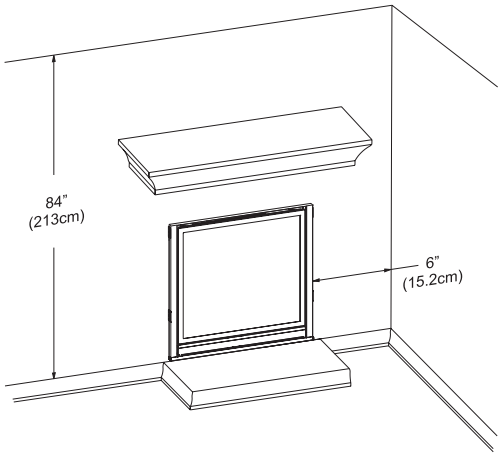

Figure 3

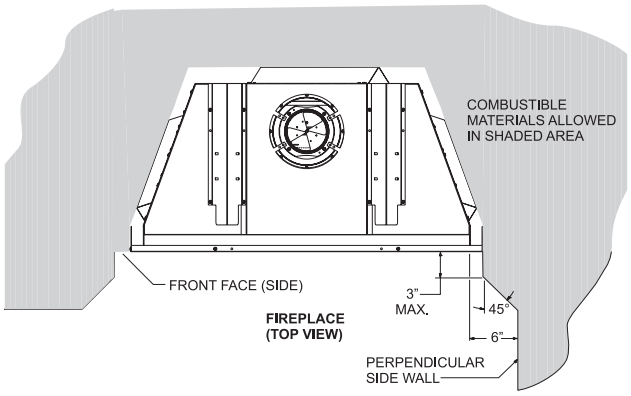

Figure 4

COMBUSTIBLE MATERIAL

Do not attach combustible material to the mantel of your fireplace. This is a fire hazard.

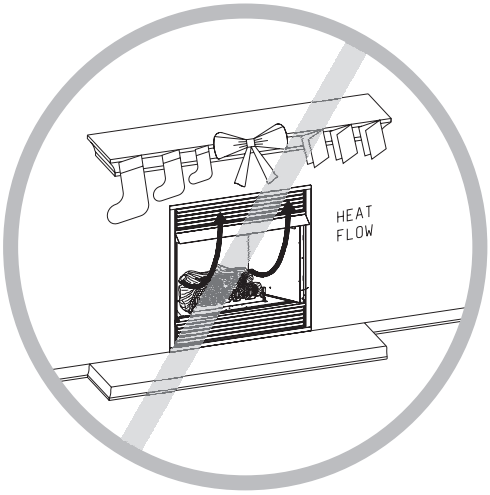

Figure 5
Note: Generic Firebox shown.

No greeting card, stockings or ornamentation of any type should be placed on or attached to the fireplace. This is a heating appliance. The flow of heat can ignite combustibles.

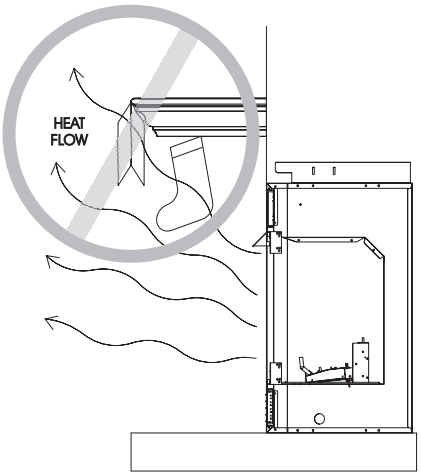

Figure 6
Note: Generic Firebox shown.

VENT TERMINATION CLEARANCES

Termination clearance for buildings with combustible and noncombustible exteriors.

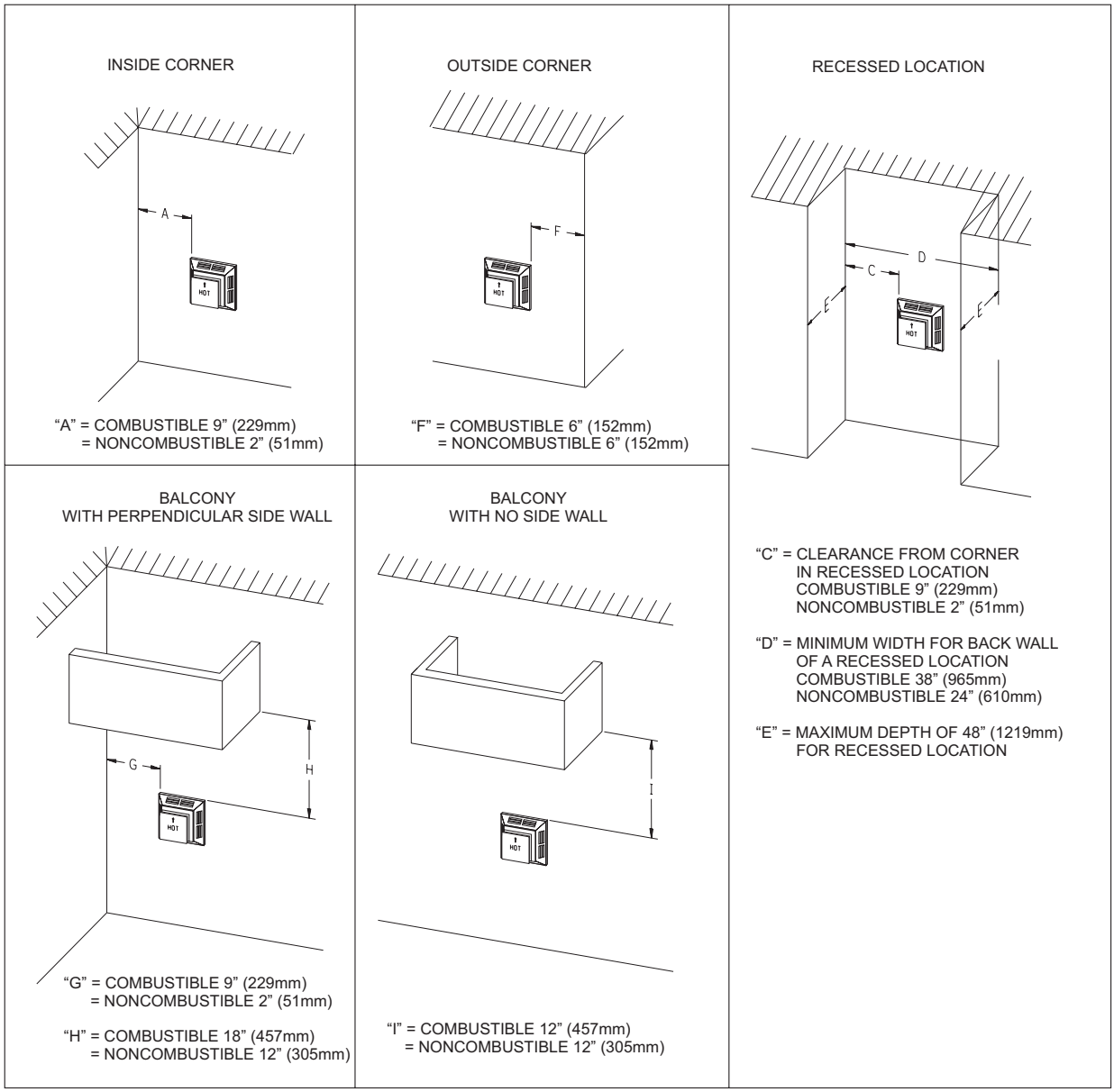

Figure 7

Vertical Sidewall Installations

Important! Minimum clearance between vent pipes and combustible materials is 3 inches (76 mm) on top, and 1 inch (25 mm) on bottom and sides.

Important! When vent termination exits through foundation less than 20 inches (508 mm) below siding outcrop, the vent pipe must extend outward so that the horizontal vent termination is located flush to, or beyond the outcrop siding.

Information on Various Venting Routes and Components

Important: It is always best to locate the fireplace in such a way that minimizes the number of offsets and horizontal vent length.

Since it is very important that the venting system maintain its balance between the combustion air intake and the flue gas exhaust, certain limitations as to vent configurations apply and must be strictly adhered to.

The graph showing the relationship between vertical and horizontal side wall venting will help to determine the various vent lengths allowable.

The horizontal vent run refers to the total length of vent pipe from the flue collar of the fireplace to the face of the outer wall.

The maximum horizontal vent run is 20 feet (6.10 m) when the vertical vent rise is 8 feet (2.44 m). **See Page 23, Figure 35.**

Venting termination shall not be recessed into wall or siding.

ATTENTION: Vinyl Soffit, Vinyl Ceiling, Vinyl Overhang Disclaimer

Clearances are to heat resistant material (i.e. wood, metal). This does not include vinyl. Empire Comfort Systems Inc. will not be held responsible for heat damage caused from terminating under vinyl overhangs, vinyl ceilings or vinyl ventilated/unventilated soffits.

VENT TERMINATION CLEARANCES

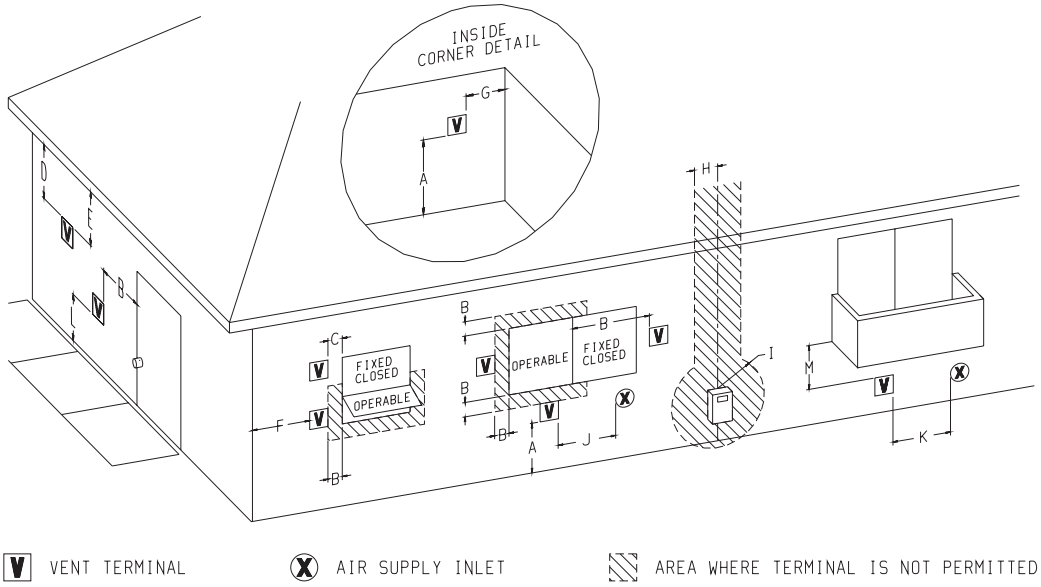

	Canadian Installations1	US Installations2
A= Clearance above grade, veranda, porch, deck, or balcony	12 in (30 cm)	12 in (30cm)
B= Clearance to window or door that may be open	6 in (15 cm) for appliances ≤ 10,000 Btuh (3 kW), 12 in (30 cm) for appliances > 10,000 Btuh (3 kW) and ≤ 100,000 Btuh (30 kW), 36 in (91 cm) for appliances > 100,000 Btuh (30 kW)	6 in (15 cm) for appliances ≤ 10,000 Btuh (3 kW), 9 in (23 cm) for appliances > 10,000 Btuh (3 kW) and ≤ 50,000 Btuh (15 kW), 12 in (30 cm) for appliances > 50,000 Btuh (15 kW)
C= Clearance to permanently closed window	12 in (30 cm)	12 in (30 cm)
D= Vertical clearance ventilated soffit located above the terminal within a horizontal distance of 2 feet (61 cm) from the center line of the terminal	24 in (61 cm)	24 in (61 cm)
E= Clearance to unventilated soffit	12 in (30 cm)	12 in (30 cm)
F= Clearance to outside corner	6 in (15 cm)	6 in (15 cm)
G= Clearance inside corner	9 in (23 cm)	9 in (23 cm)
H= Clearance to each side of center line extended above meter/regulator assembly	3 ft (91 cm) within a height 15 ft (4.5 m) above the meter/regulator assembly	3 ft (91 cm)

ATTENTION: Vinyl Soffit, Vinyl Ceiling, Vinyl Overhang Disclaimer
Clearances are to heat resistant material (i.e. wood, metal). This does not include vinyl. Empire Comfort Systems Inc. will not be held responsible for heat damage caused from terminating under vinyl overhangs, vinyl ceilings or vinyl ventilated/unventilated soffits.

	Canadian Installations1	US Installations2
I= Clearance to service regulator vent outlet	3 ft (91 cm)	6 ft
J= Clearance to nonmechanical air supply inlet to building or the combustion air inlet to any other appliance	6 in (15 cm) for appliances ≤ 10,000 Btuh (3 kW), 12 in (30 cm) for appliances > 10,000 Btuh (3 kW) and ≤ 100,000 Btuh (30 kW), 36 in (91 cm) for appliances > 100,000 Btuh (30 kW)	6 in (15 cm) for appliances ≤ 10,000 Btuh (3 kW), 9 in (23 cm) for appliances > 10,000 Btuh (3 kW) and ≤ 50,000 Btuh (15 kW), 12 in (30 cm) for appliances > 50,000 Btuh (15 kW)
K= Clearance to a mechanical air supply inlet	6 ft (1.83 m)	3 ft (91 cm) above if within 10 ft (3 m) horizontally
L= Clearance above paved sidewalk or paved driveway located on public property	7 ft (2.13 m) †	7 ft (2.13 m) †
M= Clearance under veranda, porch deck, or balcony	12 in (30 cm) ‡	12 in (30 cm) ‡

1	In accordance with the current CSA B149.1, Natural Gas and Propane Installation Code
2	In Accordance with the current ANSI Z223.1/NFPA 54, National Fuel Gas Code
†	A vent shall not terminate directly above a sidewalk or paved driveway that is located between two single family dwellings and serves both dwellings
‡	Permitted only if veranda,, porch, deck, or balcony is fully open on a minimum of two sides beneath the floor.
*	For clearances not specified in ANSI Z223.1/NFPA 54 or CSA B149.1, one of the following shall be indicated:

Clearance in accordance with local installation codes and the requirements of the gas supplier.

Figure 8

GAS SUPPLY

The gas pipeline can be brought in through the right or left side of the appliance. Consult the current National Fuel Gas Code, ANSI Z223.1 CAN/CGA-B149 (.1 or .2) installation code.

Recommended Gas Pipe Diameter

Pipe Length	Schedule 40 Pipe Inside Diameter		Tubing, Type L Outside Diameter	
	Nat.	L.P.	Nat.	L.P.
0-10 feet	1/2”	3/8”	1/2”	3/8”
10-40 feet	1/2”	1/2”	5/8”	1/2”
40-100 feet	1/2”	1/2”	3/4”	1/2”
100-150 feet	3/4”	1/2”	7/8”	3/4”

Note: Never use plastic pipe. Check to confirm whether your local codes allow copper tubing or galvanized.
Note: Since some municipalities have additional local codes, it is always best to consult your local authority and installation code.
The use of the following gas connectors is recommended:

— ANS Z21.24 Appliance Connectors of Corrugated Metal Tubing and Fittings.
— ANS Z21.45 Assembled Flexible Appliance Connectors of Other Than All-Metal Construction

The above connectors may be used if acceptable by the authority having jurisdiction. The state of Massachusetts requires that a flexible appliance connector cannot exceed three feet in length.

FLEXIBLE GAS LINE CONNECTION

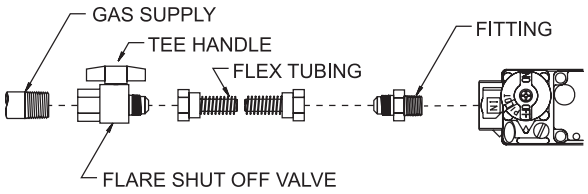

Figure 9

	Gas Supply Pressure (inches w.c.)		
	Minimum	Normal	Maximum
Natural Gas	4.5"	7.0"	14.0"
LP (Propane)	11”	11.0"	14.0"
	Manifold Pressure (inches w.c.)		
	Normal (HI)		
Natural Gas	3.5"		
LP (Propane)	10.0"		

Installing a New Main Gas Cock (Check Local Code)
Each appliance should have its own manual gas cock.
A manual main gas cock should be located in the vicinity of the unit. Where none exists, or where its size or location is not adequate, contact your local authorized installer for installation or relocation. Compounds used on threaded joints of gas piping shall be resistant to the action of liquefied petroleum gases. The gas lines must be checked for leaks by the installer. This should be done with a soap solution watching for bubbles on all exposed connections, and if unexposed, a pressure test should be made.

Never use an exposed flame to check for leaks. Appliance must be disconnected from piping at inlet of control valve and pipe capped or plugged for pressure test. Never pressure test with appliance connected; control valve will sustain damage!

NOTE: The millivolt gas controls are equipped with a captured screw type pressure test point, therefore it is not necessary to provide a 1/8 inch test point up stream of the control.

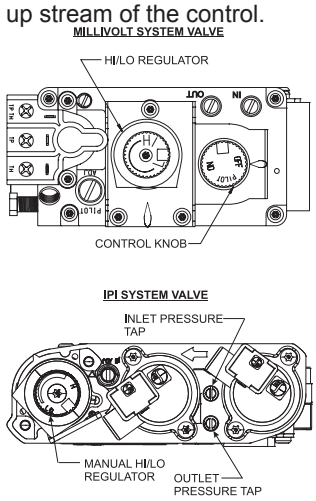

Figure 10

On direct ignition valves, hex plugs may be replaced with hose fittings for pressure checks, then reinstalled before operating fireplace.
When using copper or flex connector use only approved fittings.
The appliance and its individual shut off valve must be disconnected from supply piping system during any pressure testing of that system at test pressures in excess of 1/2 psig (3.5 kPa).
The appliance must be isolated from the gas supply piping system by closing its individual manual shut off valve during any pressure testing of the gas supply piping system at test pressures equal to or less than 1/2 psig (3.5 kPa).
Attention! If one of the procedures results in pressures in excess of 1/2 psig (14” w.c.) (3.5 kPa) on the fireplace gas valve, it will result in a hazardous condition.

Checking Manifold Pressures
Both Propane and Natural gas valves have a built-in pressure regulator in the gas valve. Natural gas models will have a manifold pressure of approximately 3.5 inch w.c. (.871 kPa) at the valve outlet with the inlet pressure to the valve from a minimum of 4.5 inch w.c. (1.120 kPa) for the purpose of input adjustment to a maximum of 14.0 inch w.c. (3.484 kPa). Propane gas models will have a manifold pressure approximately 10.0 inch w.c. (2.49 kPa) at the valve outlet with the inlet pressure to the valve from a minimum of 10.8 inch w.c. (2.68 kPa) for the purpose of input adjustment to a maximum of 14.0 inch w.c. (3.484 kPa).

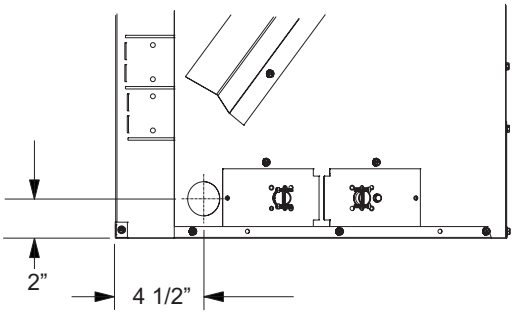

Figure 11

LOCATING FIREPLACE

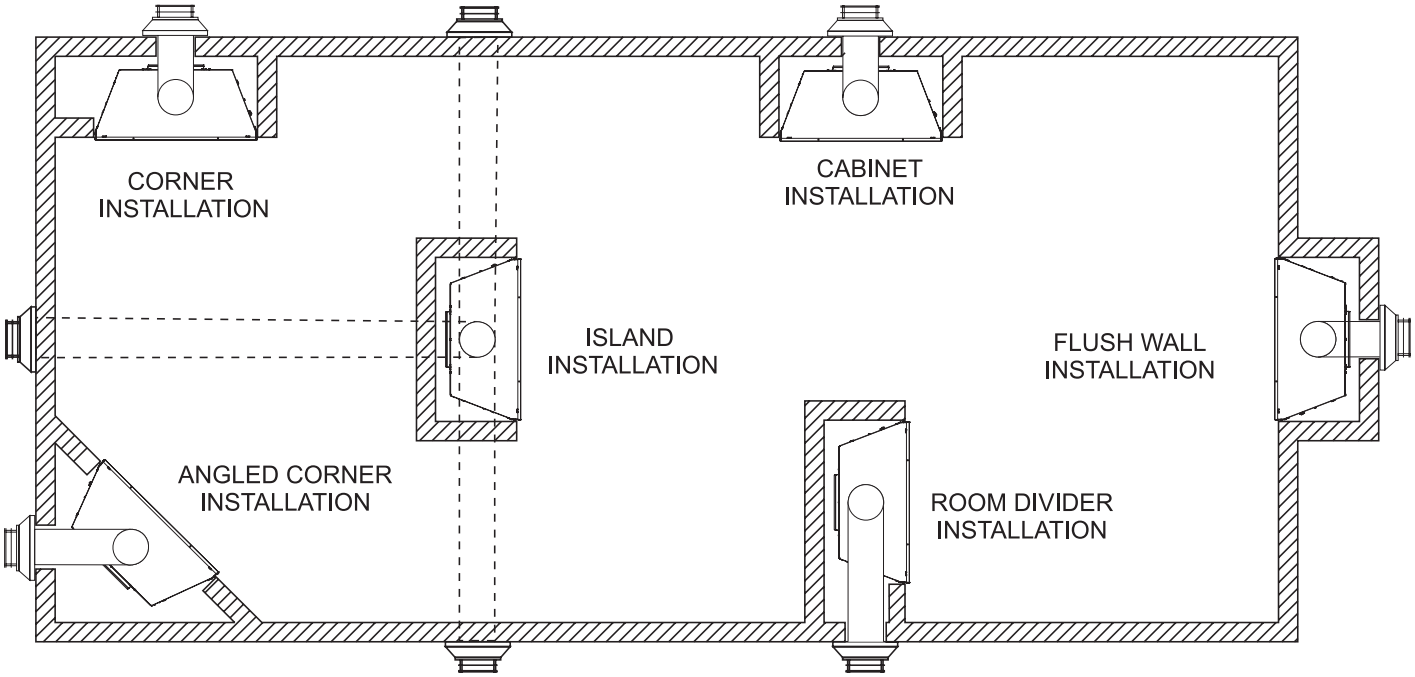

Note: Island and Room Divider installation is possible as long as the horizontal portion of the vent system does not exceed 20 feet with a minimum vertical run of 8 feet. See details in Venting Section.

Note: When installing this appliance against an exterior wall, insulate to applicable insulation codes.

When you install your Direct Vent Fireplace in Room divider or Flat on wall corner positions, a minimum of 6 inches clearance must be maintained from the perpendicular wall and the front edge of the appliance.

Figure 12

ELECTRICAL CONSIDERATIONS

⚠ CAUTION

All wiring should be done by a qualified electrician and shall be in compliance with all local, city and state building codes. Before making the electrical connection, make sure that the main power supply is disconnected. The appliance, when installed, must be electrically grounded in accordance with local codes, or in the absence of local codes, with the National Electrical Code ANSI/ NFPA 70 (Latest Edition).

Millivolt System Valve Models

A factory installed junction box is located on the lower right side of the fireplace. Wiring must be fed to the junction box and attached to the receptacle that is provided. Leave approximately 6" of wire in the junction box for connection.

Attach black wire to one side of the receptacle and white wire to opposite side of receptacle. The ground wire should be attached to the green (ground) screw.

Install the receptacle into the junction box. Attach cover plate.

JUNCTION BOX CONNECTIONS

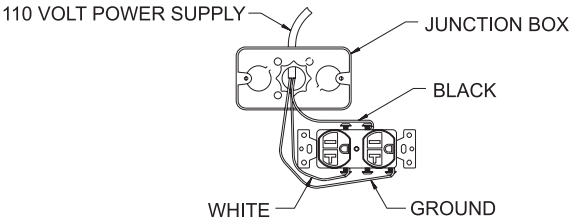

Figure 13

IPI System Valve Models

1. Power for switched and live sides of receptacle must come from the same power source. (One circuit breaker on main panel must switch all power off.)
2. From the wall box to the fireplace a 3-wire conductor with ground is recommended, however two 2-wire conductors with grounds may be used in place of a 3-wire conductor with a ground if the black wires from the thermostat and blower switch are identified.
3. Two wall switches may be used to activate the receptacle plugs independently.

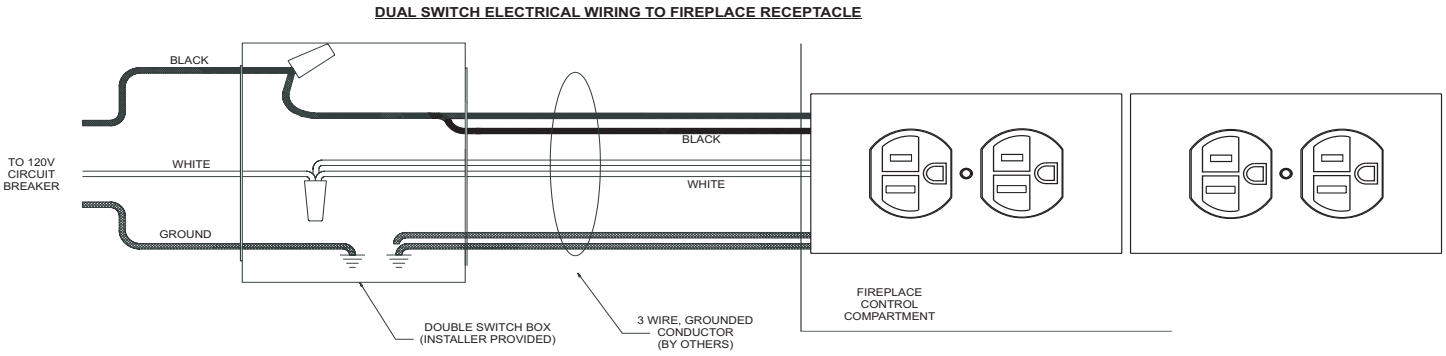

Figure 14

Framing

Fireplace framing can be built before or after the fireplace is set in place. Framing should be positioned to accommodate wall covering and fireplace facing material. The fireplace framing should be constructed of 2 x 4 lumber. The framing headers may rest on the fireplace standoffs. Refer to **Figure 15** for minimum framing dimensions.

ATTENTION: Measure fireplace dimensions and verify framing methods and wall covering details before framing construction begins.

Framing dimension "A" includes a six inch clearance for standoffs on firebox. After installing firebox into framing, the finished wall surface must cover the six inch opening above the firebox.

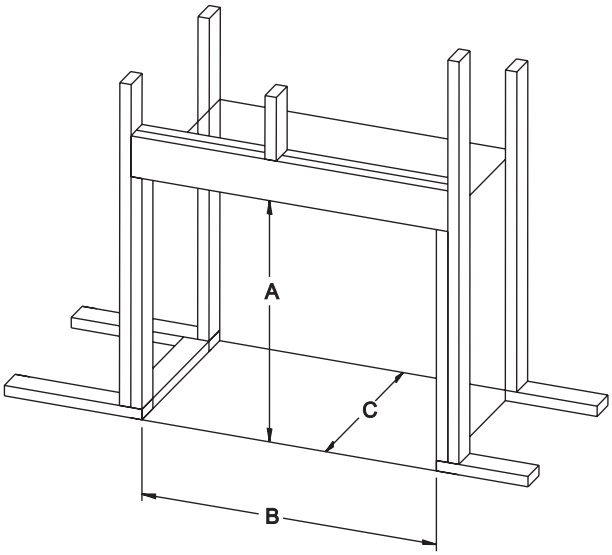

	DIMENSIONS (in inches)	
Dim.	DVCX36	DVCX42
A	42-5/16	42-5/16
B	42-3/8	46-3/8
C	21-1/2	21-1/2

Figure 15

Framing and Finishing

1. Choose unit location.
2. Frame in fireplace with a header across the top. It is important to allow for finished face when setting the depth of the frame.
3. Attach fireplace to frame using adjustable frame. Preset depth to suit facing material (adjustable to 1/2, 5/8 or 3/4-inch depths).
4. Locate the nailing flanges on the sides of the firebox (two each side).
6. Measure from face of fireplace to face of drywall strip to determine final depth and adjust nailing flanges as shown in **Figure 16**.

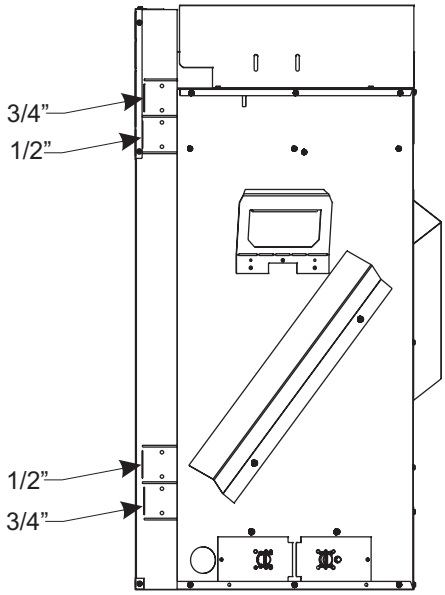

Figure 16

8. Bend the nailing flanges 90 degrees.

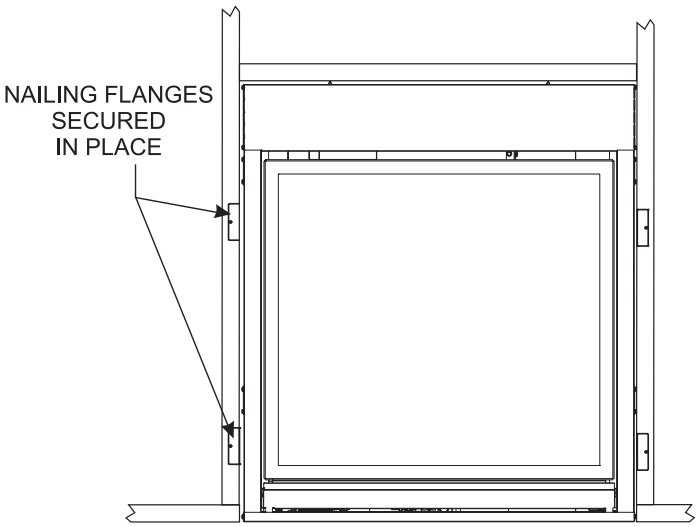

Figure 17

Vent Pipe Clearance

Note: Maintain two inches of clearance around vertical vent pipe on first twelve inches. **See Figure 18**.

For horizontal vent, maintain a minimum one-inch clearance to the bottom and sides of the vent, and three-inch clearance to combustibles above the vent pipe. **See Figure 19.**
NOTE: A two-inch clearance around pipe for the first twelve inches above the fireplace is required.

Finish the joint between the fireplace and wall with sealant rated at 300 degrees F, or tile/stone over the joint.

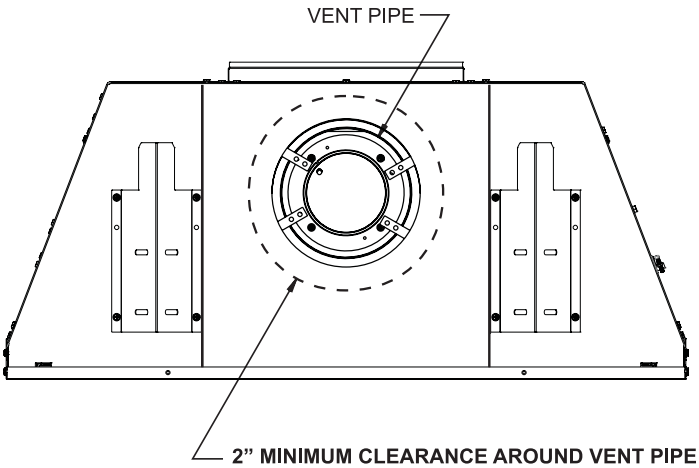

Figure 18

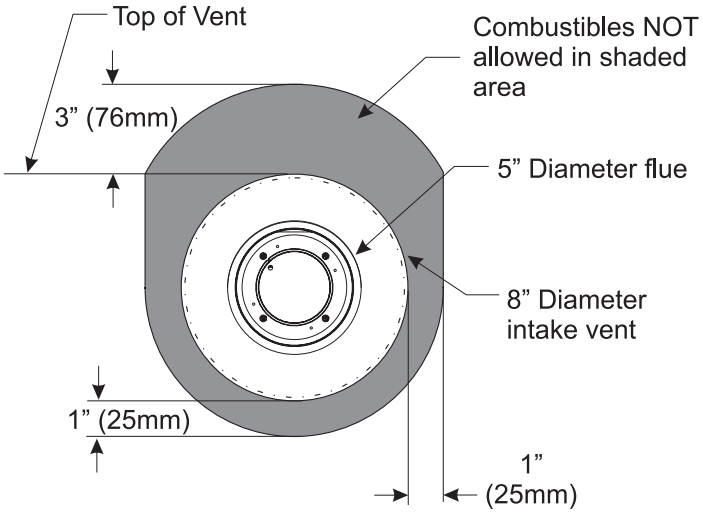

Horizontal Vent Clearances - Figure 19

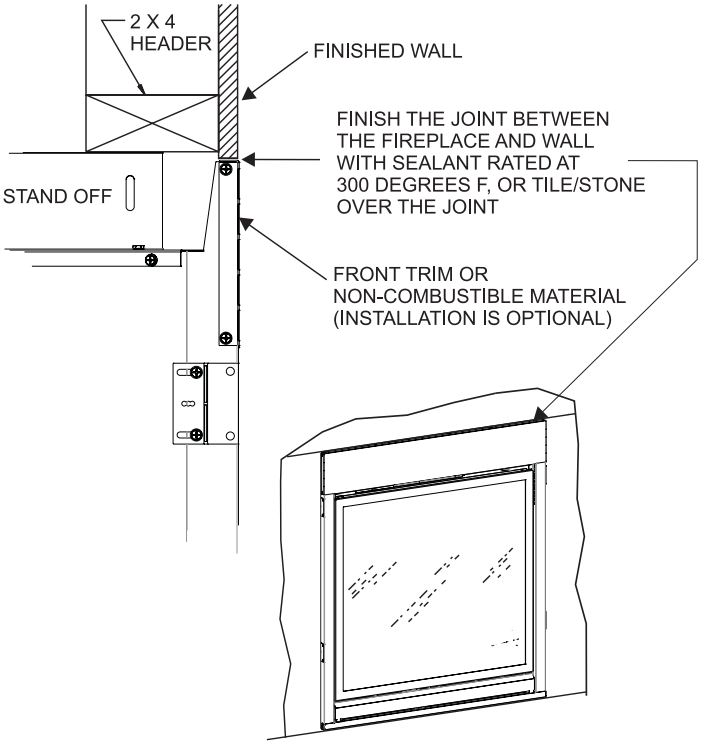

Flush Wall Installation - Figure 20

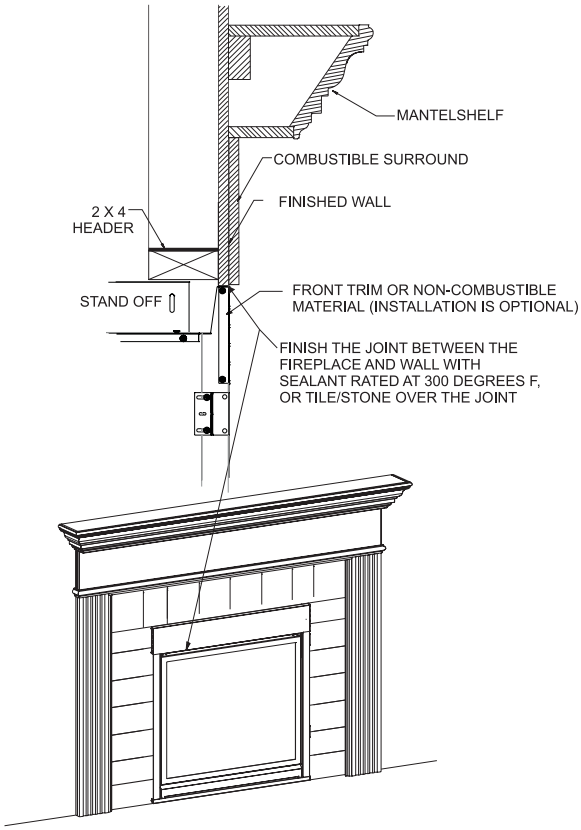

Combustible Surround Installation - Figure 21

Attention: Cold climate installation recommendation: When installing this unit against a non-insulated exterior wall, the outer walls should be insulated to conform to applicable codes.

Vent Runs

In planning the installation for the fireplace, it is necessary to install certain components before the appliance is completely positioned and installed. These include the direct vent system, gas piping for the appliance and the electrical wiring. (If the fan option is used.) The appliance can be mounted on any of the following surfaces:

1. A flat, hard combustible (burnable) surface.
2. A raised wooden platform.
3. Four corner supports. (Example: Four concrete masonry blocks.) These supports must be positioned so they contact all four perimeter edges on the bottom of the unit.

Securing the Vent Pipe to the Fireplace

1. Hand bend the tabs up on the Outer Wrapper Top Assembly as shown in Figure 22.

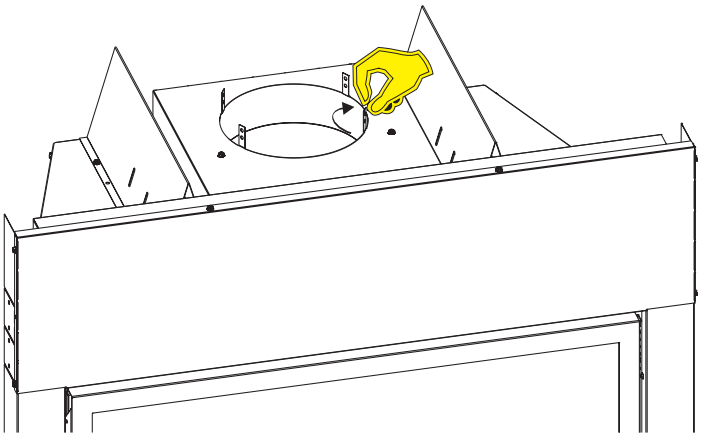

Figure 22

2. Insert the first piece of pipe and secure with 4 screws through the tabs and into the pipe. **See Figures 23 and 24.**

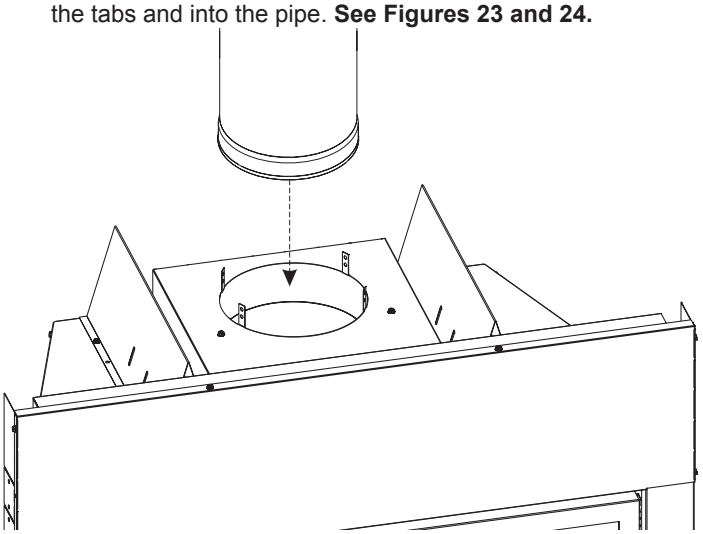

Figure 23

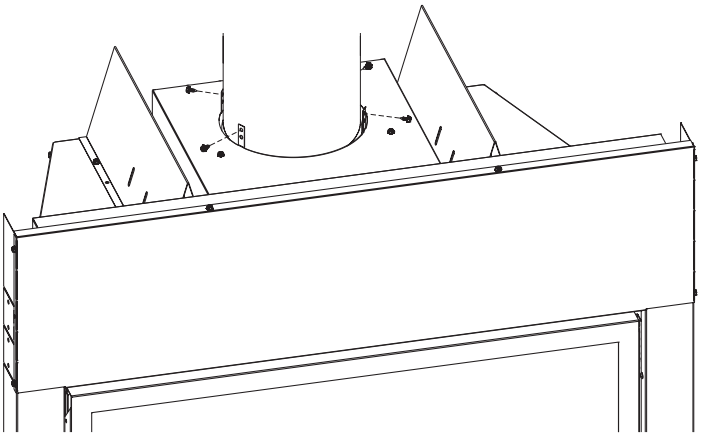

Figure 24

VERTICAL, 90 DEGREE ELBOW WITH HORIZONTAL TERMINATION

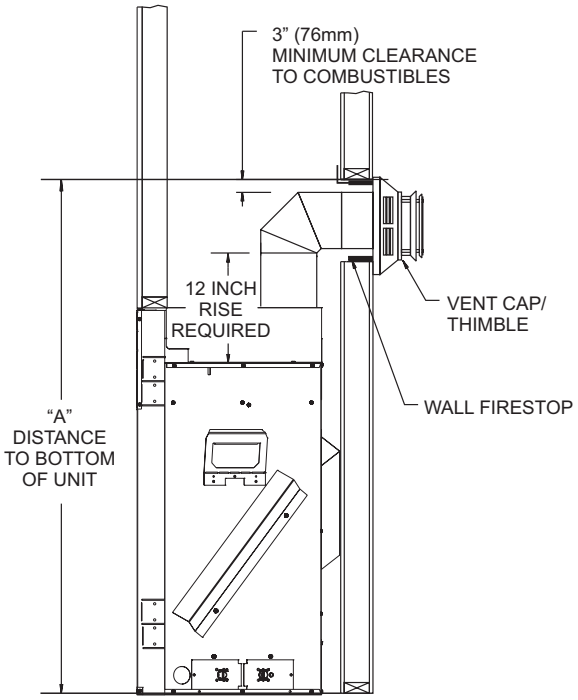

A DIMENSION (in inches)	
DVCX36	57-1/2
DVCX42	57-1/2

Figure 25

VERTICAL, 90 DEGREE ELBOW TO HORIZONTAL OUT THE WALL (12" minimum rise before elbow)

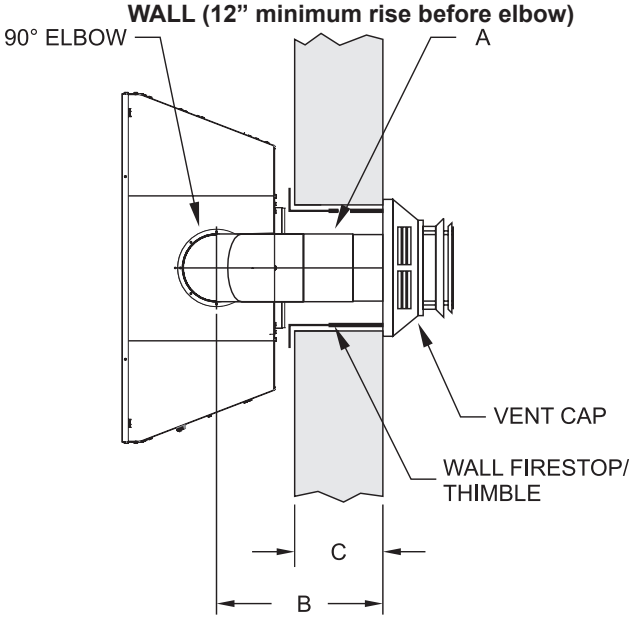

Dimensions (in inches)		
A	**B**	**C**
9	14 to 15-1/2	4-3/4 to 6-1/4
12	17 to 18-1/2	4-3/4 to 9-1/4
18	20 to 21-1/2	10-3/4 to 12-1/4

Figure 26

CORNER INSTALLATION - VERTICAL, 90 DEGREE ELBOW TO HORIZONTAL OUT THE WALL (12" minimum rise before elbow)

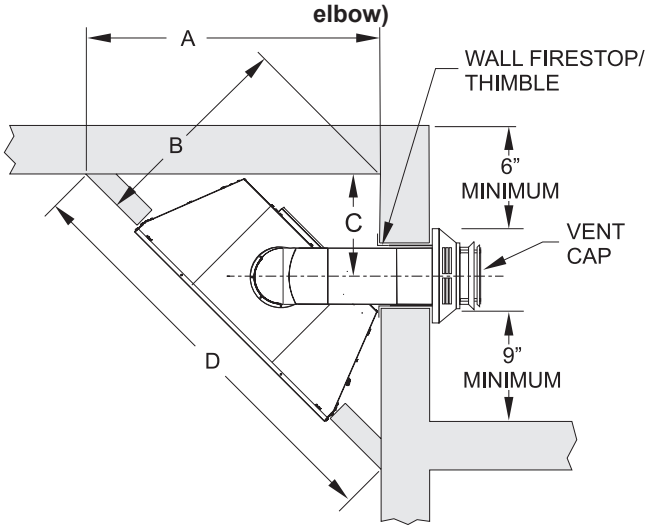

DIMENSIONS (in inches)		
Dim.	**DVCX36**	**DVCX42**
A	47	49-7/8
B	33-1/4	35-1/4
C	13-3/4	15-1/8
D	66-3/8	70-1/2

Figure 27

After installing the vent system, install flue heat shield.

1. Hand bend tabs on flue heat shield out 90°.
2. Attach to insulation box as shown in Figure 26.

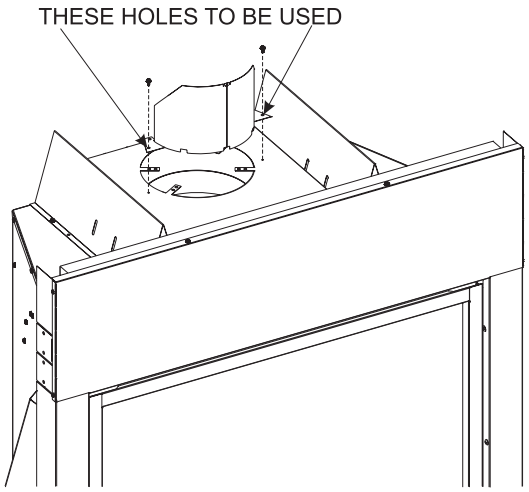

Figure 28 (vent pipe removed for clarity)

VENT SYSTEM IDENTIFICATION

Begin the vent system installation by selecting the type of venting to be installed and the path that it will take. Verify that clearances are met throughout the path of the venting system.

Determine how the vent system will be terminated out the side of the house or through the roof. Verify clearances for the termination.

When selecting a vent system for use with the fireplace, refer to the “Special Vent Systems” section in this manual to determine what systems are acceptable. Check all clearances and venting components. Identify if any problems existing in the vent system. Use **Figure 35** on Page 23 for venting to eliminate issues after installation. Check pipe diameter on vent system and fireplace to verify the size is the same.

***NOTICE*:** All outer connection joints must be sealed with aluminum tape, screws or silicone sealant rated above 300°F/149°C. The inner flue joints do not require any sealant.

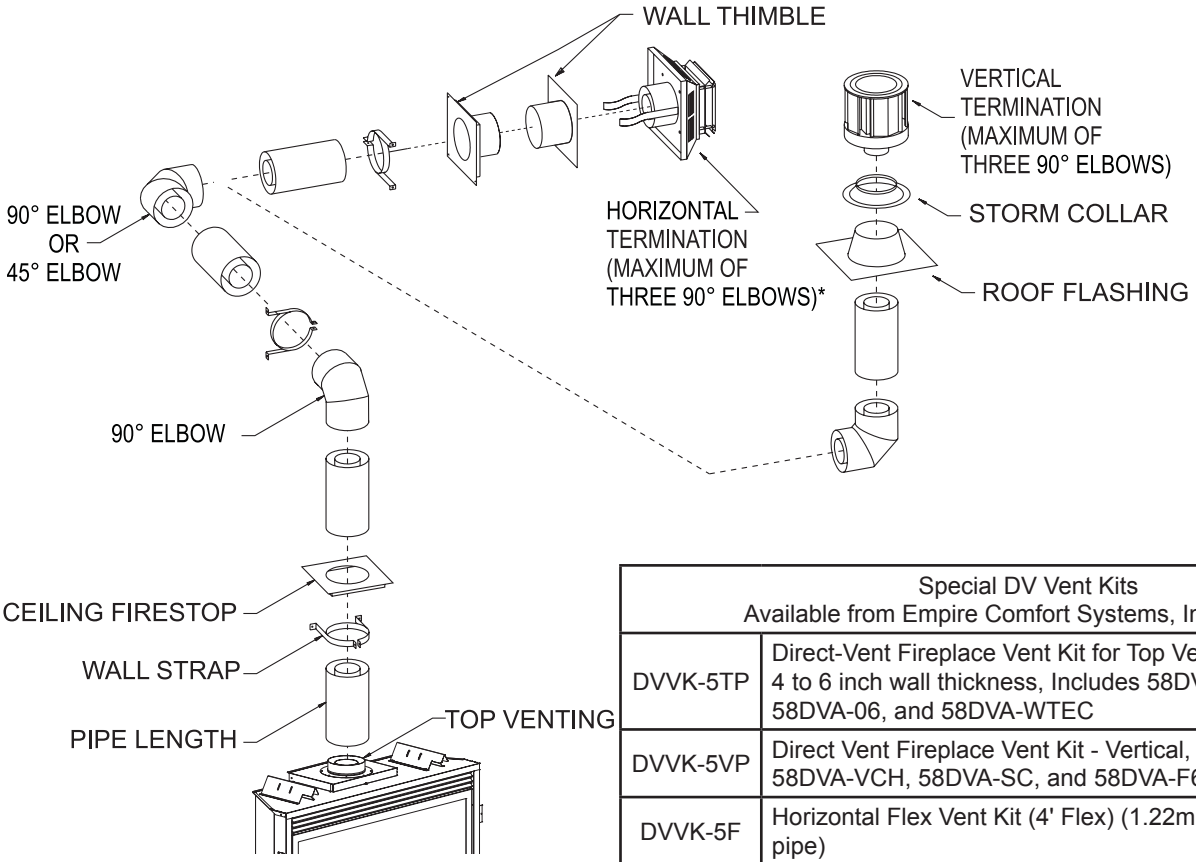

Figure 29

Special DV Vent Kits Available from Empire Comfort Systems, Inc. dealers.	
DVVK-5TP	Direct-Vent Fireplace Vent Kit for Top Vent, Thru-the-wall, 4 to 6 inch wall thickness, Includes 58DVA-E90, 58DVA-HC, 58DVA-06, and 58DVA-WTEC
DVVK-5VP	Direct Vent Fireplace Vent Kit - Vertical, Includes 58DVA-VCH, 58DVA-SC, and 58DVA-F6
DVVK-5F	Horizontal Flex Vent Kit (4' Flex) (1.22m) (requires 58DVA-06 pipe)

For venting a fireplace through the top, see Page 23.

VENT SYSTEMS

Use one of the following 5 x 8 vent systems:
Simpson Duravent® GS
Simpson Duravent® DVA-H2
American Metal Products (round cap only)
Selkirk Direct-Temp®
Security Secure Vent®
Excel DV Venting
Empire Horizontal Flex Vent Kit DVVK-5F
Metal Fab Sure Seal® (Note: Adaptor pipe starter required)

VENTING FIREPLACE

⚠ CAUTION

Use flue restrictor for vertically terminated units only. Do not use for horizontally terminated units. Incorrect usage may cause sooting.

Figure 31 shows the location and recommended openings for the flue restrictor. Adjustments may be made for each particular installation.

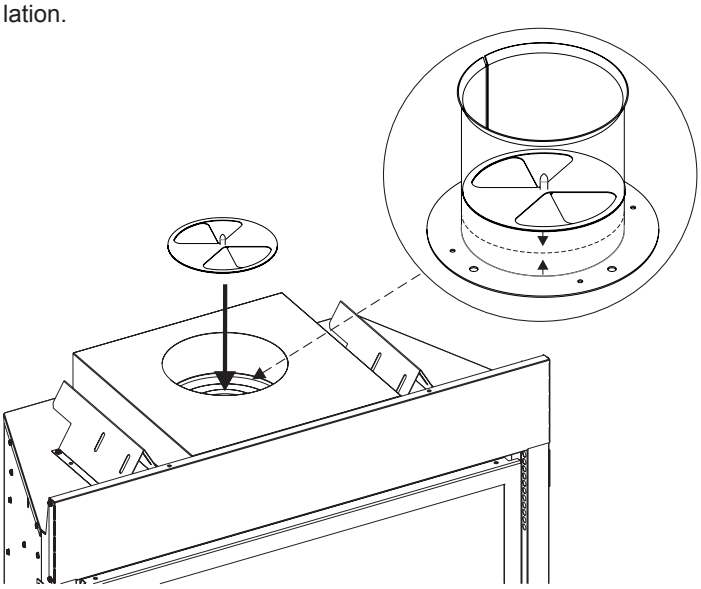

Figure 30

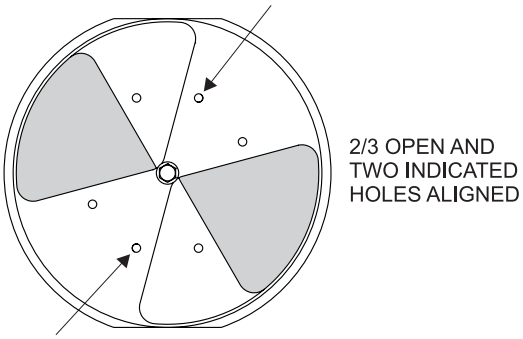

NAT

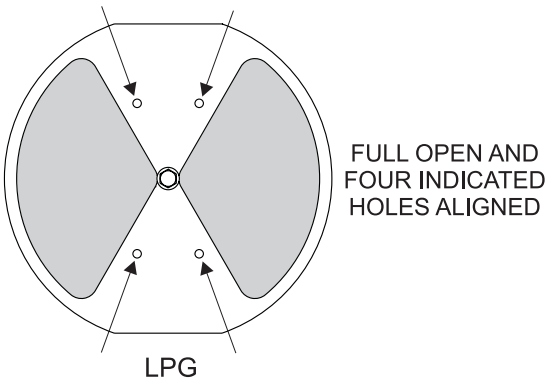

LPG

Figure31

The minimum hole location dimensions for through the wall horizontal installations with a 90 degree elbow and 12 inch rise off the top of the fireplace.

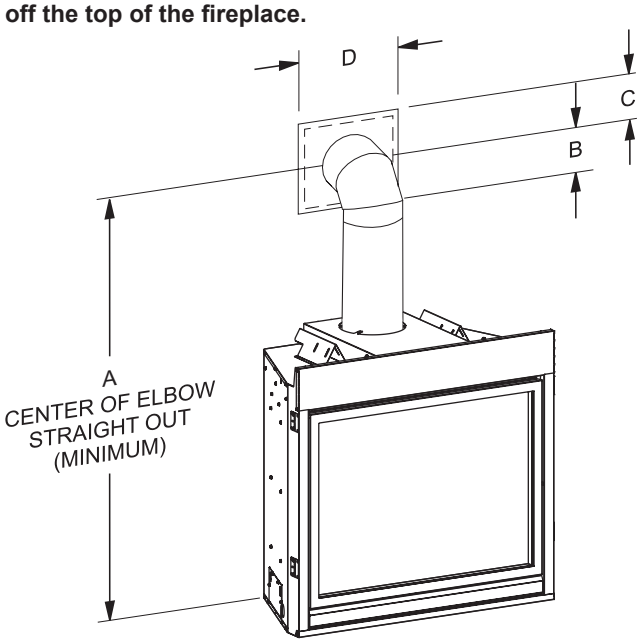

FIREPLACE SERIES	HARD ELBOW DIMENSIONS (in inches)			
	A	B	C	D
DVCX36	51-1/2	5-5/16	7-5/16	10-5/8
DVCX42	51-1/2	5-5/16	7-5/16	10-5/8

Figure 32

Positioning the Fireplace

Determine the exact position of the appliance so the direct-vent termination will be centered (if possible) between two studs. This will avoid any extra framing. All vent kit pipes should be assembled on the unit after the unit is moved into the final position.

Cutting the Hole

After the fireplace has been positioned in its permanent location, the hole through the exterior wall of the house can be cut. This hole must be 12-5/8" (320mm) high x 10-5/8" (270mm) wide with its center line determined by the amount of vertical rise and horizontal run of the termination. **See Figure 33.** When locating the hole it must be noted that the bottom of the cap must be 12" (305mm) above the ground level, and top of the cap must be no less than 18" (457mm) below a combustible projection, and no closer than 9" (229mm) to any wall running parallel to vent termination.

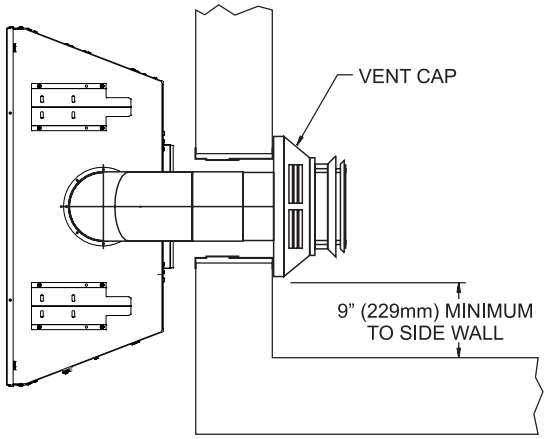

Figure 33

Below Grade Installation

When it is not possible to meet the required vent termination clearances of 12 inches (305 mm) above grade level, a snorkel kit is recommended. It allows installation depth down to 7 inches (178 mm) below grade level. The 7 inches (178 mm) is measured from the center of the horizontal vent pipe as it penetrates through the wall.

⚠ CAUTION

Ensure the sidewall venting clearances are observed. If venting system is installed below ground, we recommend a window well with adequate and proper drainage to be installed around the termination area.

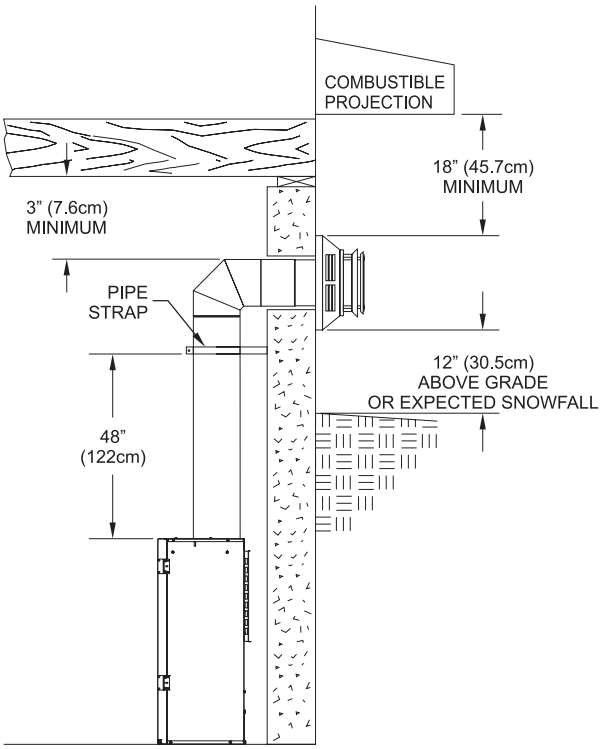

TYPICAL BASEMENT INSTALLATION

Figure 34

VENTING GRAPH (Dimensions in Feet)

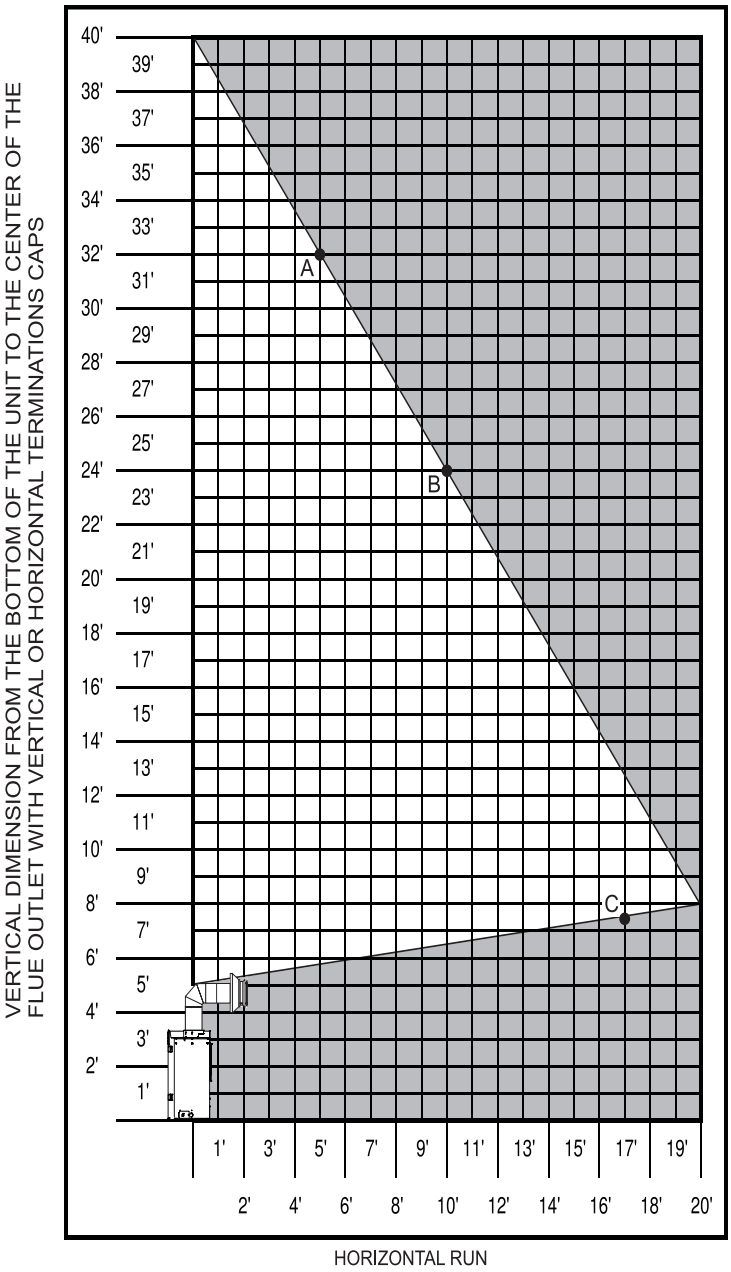

☐ Acceptable vertical and horizontal vent run.
(40' maximum vertical and 20' maximum horizontal)

■ Unacceptable vertical and horizontal vent run.

See Figure 36 on Page 24 for A, B and C examples.

Figure 35

To Use the Vent Graph

1. Determine the height of the center of the horizontal vent pipe. Using this dimension on the Sidewall Vent Graph, locate the point it intersects with the slanted graph line.
2. From the point of this intersection, draw a vertical line to the bottom of the graph.
3. Select the indicated dimension, and position the unit in accordance with same.

EXAMPLE A:
If the vertical dimension from the floor of the unit is 32 feet, the horizontal run to the outer wall flange must not exceed 5 feet.

EXAMPLE B:
If the vertical dimension from the floor of the unit is 24 feet, the horizontal run to the outer wall flange must not exceed 10 feet.

EXAMPLE C:
If the horizontal run to the outer wall flange is 17 feet, the vertical dimension from the floor of the unit to the center of the termination must not be less than 7 feet 6 inches.

SPECIAL NOTE: For each 45° elbow installed in the horizontal run, the length of the horizontal run MUST be reduced by 18 inches. Reduce 3 feet for every 90° elbow. This does not apply if the 45° elbows are installed on the vertical part of the vent system.

Example: According to the chart the maximum horizontal vent length is 20 feet and if two 45° elbows are required in the horizontal vent it must be reduced to 17 feet.

The maximum number of 45° elbows permitted per side wall installation is two. These elbows can be installed in either the vertical or horizontal run.

The maximum number of 90° elbows in a vent run is three.

Note: On vertical venting the first elbow does not get counted.

Note: A horizontal vent with the minimum required vertical rise (using a 12-inch section of vent before the elbow) will use a maximum of a 2-foot section of horizontal vent before the termination.

TOP VENT - HORIZONTAL TERMINATION

One 90° Elbow

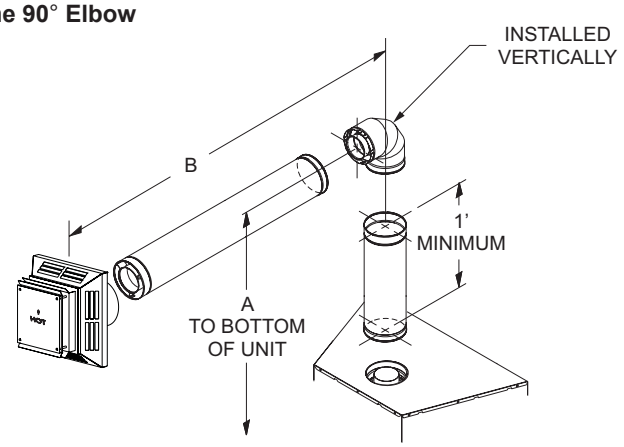

	EXAMPLE VENT RUNS		
	INITIAL PIPE LENGTH	A (Vertical)	B (Horizontal)
	12”	4’-3.5”	2’ MAXIMUM
	24”	5’-3.5”	9’ MAXIMUM
	36”	6’-3.5”	14’ MAXIMUM
EXAMPLE C	4’	7’-3.5”	17’ MAXIMUM
EXAMPLE B	20’-6”	23’-9.5”	10’ MAXIMUM
EXAMPLE A	28’-6”	31’-9.5”	5’ MAXIMUM

Figure 36

Note: Pipe straps must be used every 2 feet to secure venting.

Two 45° Elbows

Installation requirements to replace the first 90° elbow with two 45° elbows:

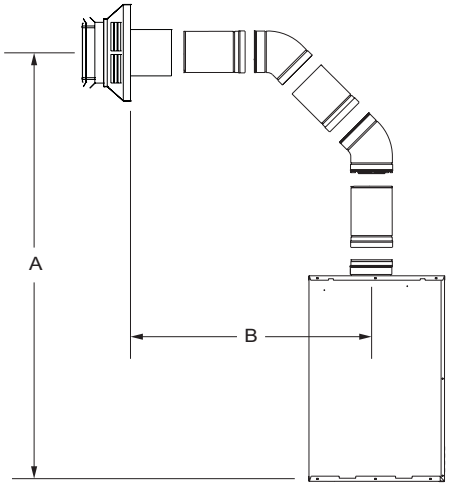

EXAMPLE VENT RUNS		
INITIAL PIPE LENGTH	A (Vertical)	B (Horizontal)
2’	6’	9’ MAXIMUM
3’	7’	14’ MAXIMUM
4’	8’	20’ MAXIMUM
12’	16’	15’ MAXIMUM
24’	28’	7’-6” MAXIMUM

Figure 37

Two 90° Elbows

Note: Subtract 3 feet from the total horizontal measurement for each 90° elbow installed horizontally. Subtract 1-1/2 feet from the total horizontal measurement for each 45° elbow installed horizontally.

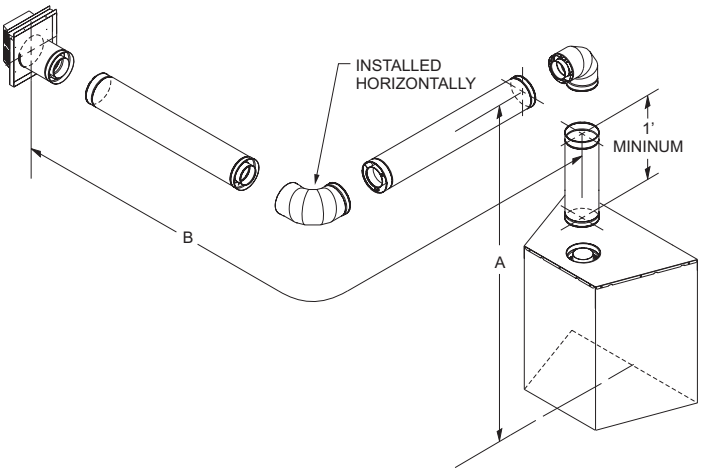

EXAMPLE VENT RUNS		
INITIAL PIPE LENGTH	A (Vertical)	B (Horizontal)
3’	6’-3.5”	11’ MAXIMUM
4’	7’-3.5”	17’ MAXIMUM
4’-6”	7’-9.5”	17’-16” MAXIMUM
12’-6”	15’-9.5”	11’-6” MAXIMUM
24’-6”	27’-9.5”	4’-6” MAXIMUM

Figure 38

Three 90° Elbows

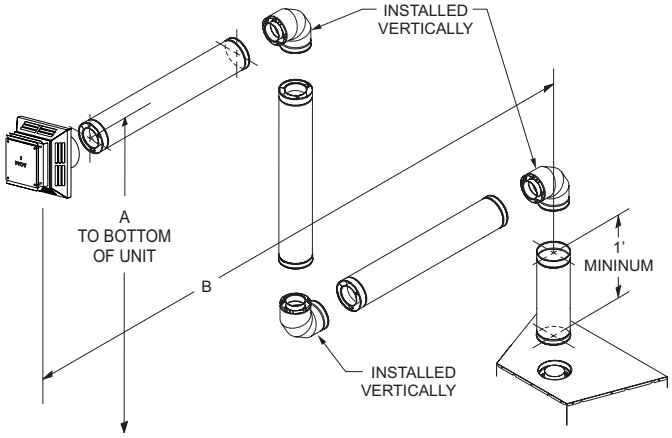

EXAMPLE VENT RUNS		
INITIAL PIPE LENGTH	A (Vertical)	B (Horizontal)
1’ MINIMUM	6’-6”	7’ MAXIMUM
1’ MINIMUM	7’-6”	14’ MAXIMUM
1’ MINIMUM	8’	17’ MAXIMUM
1’ MINIMUM	16’	12’ MAXIMUM
1’ MINIMUM	32’	2’ MAXIMUM

Figure 39

TOP VENT - VERTICAL TERMINATION

No Elbows

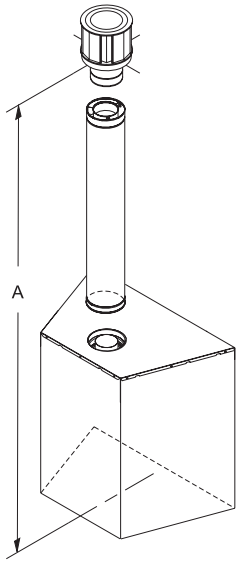

Index Letter	Dimensions	
	Maximum	Minimum
A	40 ft	10 ft

Figure 40

Two 90° Elbows

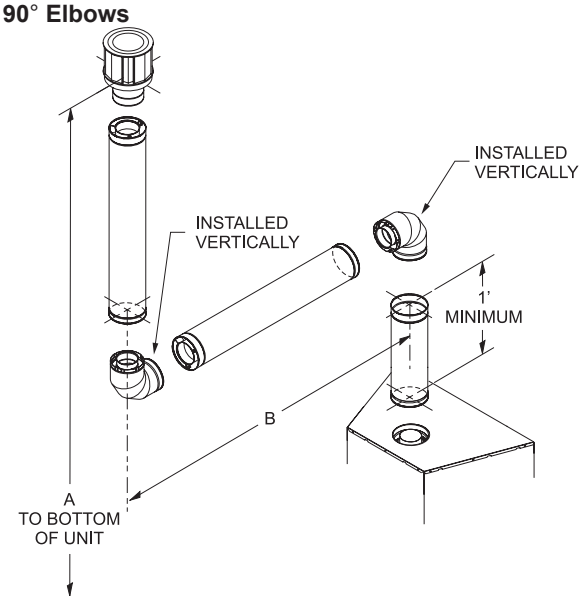

Dimensions (in Feet)		
	A	B*
MIN. 4	8	20
6	10	18-1/2
8	12	17
10	14	16
MAX. 12	16	15

*Maximum horizontal run is 100% of vertical, but cannot exceed 20 feet.

Figure 41

Three 90° Elbows

Note: Subtract 3ft (914 mm) from the total horizontal measurement for each 90° elbow installed horizontally. Subtract 1-1/2 ft (457 mm) from the total horizontal measurement for each 45° elbow installed horizontally.

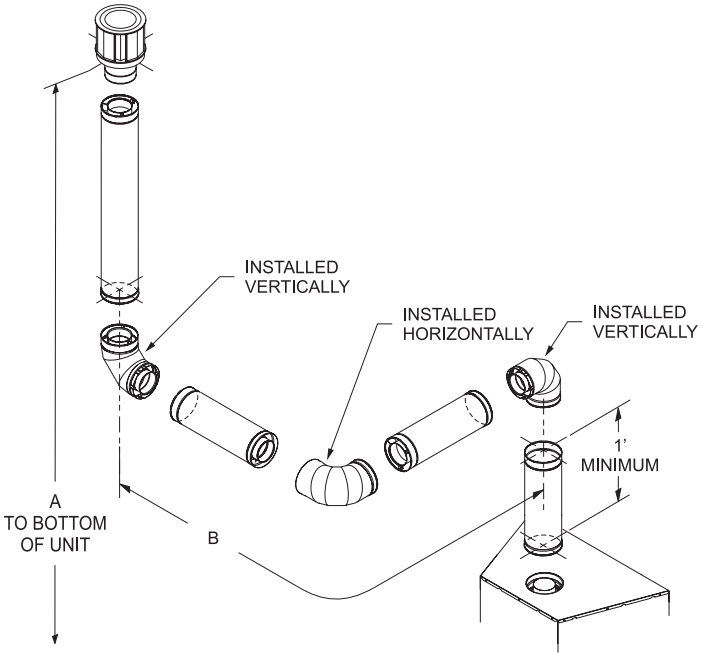

Dimensions (in Feet)		
	A	B*
MIN. 4	8	17
6	10	15-1/2
8	12	14
10	14	13
MAX. 12	16	12

*Maximum horizontal run is 100% of vertical, but cannot exceed 17 feet.

Figure 42

After installing the vent system, install flue heat shield.

1. Hand bend tabs on flue heat shield out 90°.
2. Attach to insulation box as shown in Figure 43.

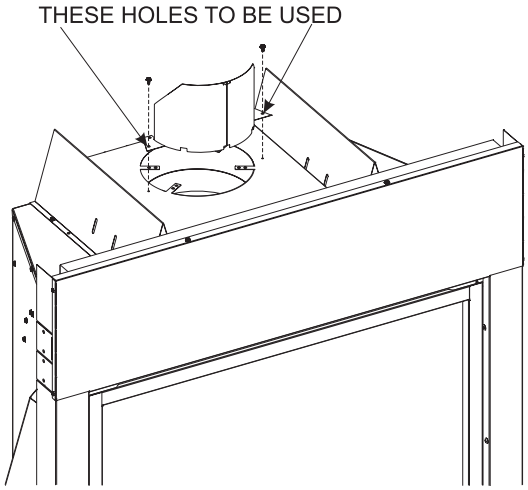

Figure 43

VERTICAL TERMINATION

Locate and mark the center point of the vent pipe using a nail on the underside of the roof. Drive the nail through the center point. Mark the outline of the roof hole around this center point.

NOTE: Size of the roof hole dimensions depend on the pitch of the roof. There must be a 1 inch (25 mm) clearance to the vertical pipe sections. This clearance is to all combustible material.

Cover the opening of the vent pipe and cut and frame the roof hole. Use framing lumber the same size as the roof rafters and install the frame securely. Flashing anchored to frame must withstand high winds. The storm collar is placed over this joint to make a water-tight seal. Non-hardening sealant should be used to completely seal this flashing installation.

Determining Minimum Vent Height Above the Roof.

⚠ WARNING

Major U.S. building codes specify minimum chimney and/or vent height above the roof top. These minimum heights are necessary in the interest of safety. These specifications are summarized in Figure 44.

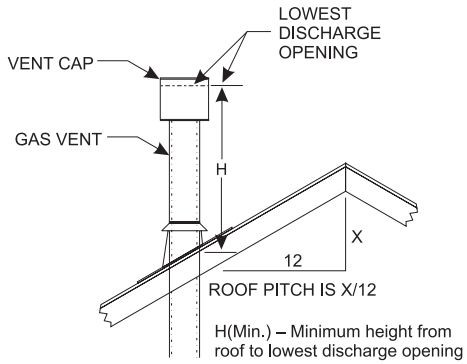

ROOF PITCH	H (Min.)
Flat to 6/12	12" (305 mm)
6/12 to 7/12	15" (381 mm)
Over 7/12 to 8/12	18" (457 mm)
Over 8/12 to 16/12	24" (610 mm)
Over 16/12 to 21/12	36" (914 mm)

Figure 44

Note that for steep roof pitches, the vent height must be increased. In high wind conditions, nearby trees, adjoining roof lines, steep pitched roofs, and other similar factors can result in poor draft, or down-drafting. In these cases, increasing the vent height may solve this problem.

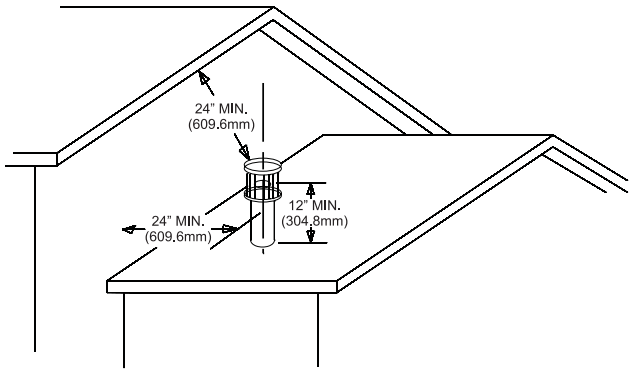

Figure 45

General Maintenance

Inspect venting system semi-annually as follows:

1. Check for corrosion areas of the venting system exposed to the elements. These will appear as rust spots or streaks and, in extreme cases, holes. Replace damaged components should immediately.
2. Remove the cap and shine a flashlight down the vent. Remove any bird nests or other foreign material.
3. Check for evidence of excessive condensate, such as water droplets forming in the inner liner and subsequently dripping out at joints. Condensate can cause corrosion of caps, pipe and fittings. It may be caused by having excessive lateral runs, too many elbows and exterior portions of the system being exposed to cold weather.
4. Inspect joints to verify that no pipe sections or fittings have been disturbed and, consequently, loosened. Also, check mechanical supports, such as wall straps or plumbers' tape for rigidity.

Venting termination shall not be recessed into a wall or siding.

A removable panel or other means must be provided in the enclosure for visual inspection of the flue connection.

NOTE: This also pertains to vertical vent systems installed on the outside of the building.

Slide the vertical vent cap over the ends of the vent pipe and secure. **See Figure 46.**

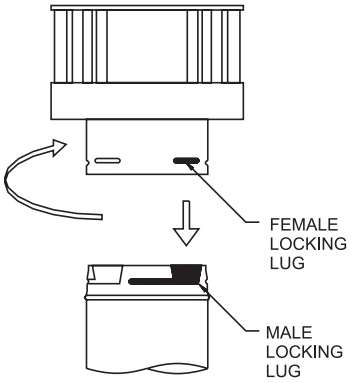

Figure 46

Installing the Vent System in a Chase

A chase is a vertical box-like structure built to enclose the gas appliance and/or its vent system. Vertical vent runs on the outside of a building may be, but are not required to be installed inside a chase.

⚠ CAUTION

Treatment of firestop spacers and construction of the chase may vary with the type of building. These instructions are not substitutes for the requirements of local building codes. Check local building codes to determine the requirements for these steps.

NOTE: Build the chase large enough to the minimum clearance of combustible materials (including insulation) to the vent system. When installing the vent system in a chase, to insulate the chase as you would the outside walls of your home. This is especially important in cold climates. Upon completion of chase framing, install the vent system by following the instructions in this manual.

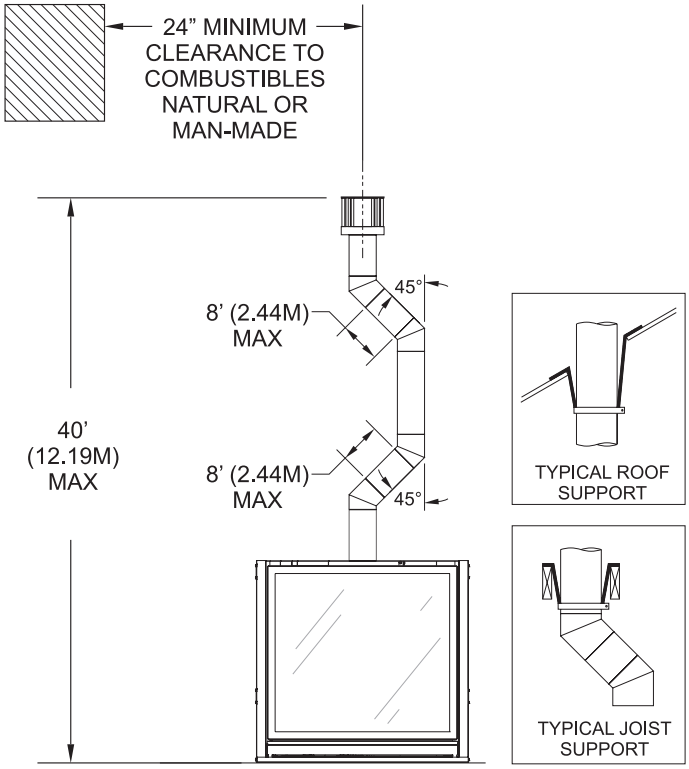

Figure 47

Vertical Through the Roof Applications

Your Gas Fireplace has been approved for:

a) Vertical installations up to 40 feet in height.
b) Two sets of 45 degree elbow offsets within these vertical installations. From 0 to a maximum of 8 ft. a vent pipe can be used between elbows.
c) Wall straps must be used to support offset pipe every 4’.

This application will require that you first determine the roof pitch and use the appropriate venting components.

OFFSET CHART

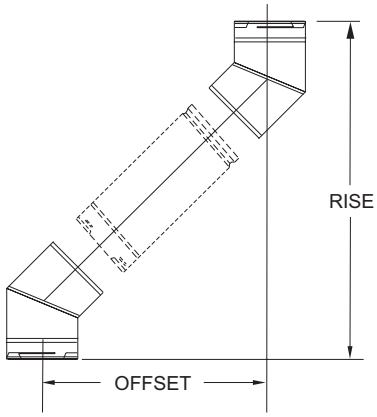

SIZE		5” X 8”	
ELBOW DEGREES	CHIMNEY SECTION	OFFSET INCHES	RISE INCHES
45°	0”	5-5/8”	15-3/8”
45°	6”	8-7/8”	18-3/8”
45°	9”	10-7/8”	20-5/8”
45°	12”	13”	22-5/8”
45°	24”	21-3/8”	31-1/8”
45°	36”	29-7/8”	39-3/8”
45°	36”	28-7/8”	39-3/8”
45°	48”	38-1/4”	47-7/8”

Figure 48

Installing Support Brackets
Install a horizontal pipe support used for each 3 feet of horizontal run to framing members. Allow 3 inch clearance to combustibles above 8 inch diameter pipe and elbows and 1 inch clearance on both sides and bottom.
Support vertical runs of this vent systems every 4 feet using wall brackets attached to the vent pipe and secured with nails or screws to structural framing.

Note: Maintain minimum 2 inch clearance between stud wall and outside diameter of pipe within the first 12 inches above flue outlet.

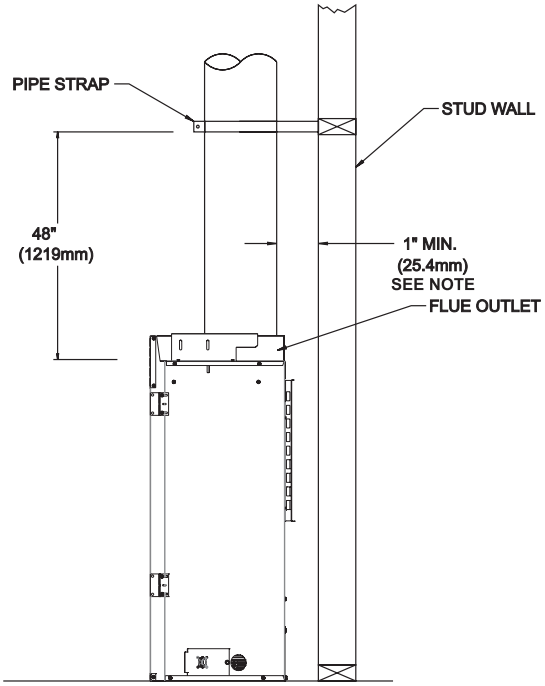

Figure 49

Installing Firestops
Firestops are required for safety whenever the vent system passes through an interior wall, an exterior wall, or a ceiling. These firestops act as a firebreak heat shield and as a means to insure that minimum clearances are maintained to the vent system.

Horizontal Firestops
Horizontal runs in the vent system which pass through either interior or exterior walls, require the use of wall firestops on both sides of the wall through which the vent passes.
Position the firestops on both sides of the framed hole, previously cut. Refer to **Figures 51 - 53** on Page 29 for sizing information. Secure firestop with nails or screws. The heat shields of the firestops MUST BE placed towards the top of the hole. Continue the vent run through the firestops.

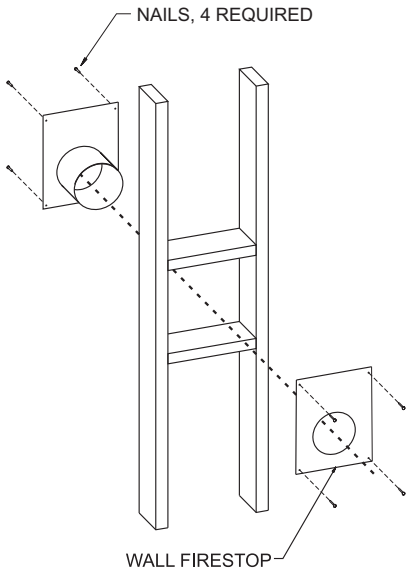

Figure 50

NOTE: SD58DVAWTEC Wall thimble is necessary to maintain the required three inches of clearance to combustibles above the vent. Framed hole dimensions shown above are for this wall thimble.

Vertical Firestops

Vertical runs of this system which pass through ceilings require the use of ONE ceiling firestop at the hole in each ceiling through which the vent passes.

Position a plumb bob directly over the center of the vertical vent component and mark the ceiling to establish the center point of the vent. Drill a hole or drive a nail through this center point and check the floor above for any obstructions such as wiring or plumbing runs. Reposition the appliance and vent system, if necessary, to accommodate ceiling joists and/or obstructions.

Cut a 10-5/8 inch x 10-5/8 inch hole through the ceiling, using the center point previously marked. Frame the hole with framing lumber the same size as the ceiling joists. **See Figure 51.** If the area above the ceiling is NOT an attic, position and secure the ceiling firestop on the ceiling side of the previously cut and framed hole. **See Figure 52.** If the area above the ceiling is an attic, position and secure the firestop on top of the previously framed hole. **See Figure 53.**

NOTE: Remove insulation from the framed area in the attic before installing the firestop and/or vent pipes.

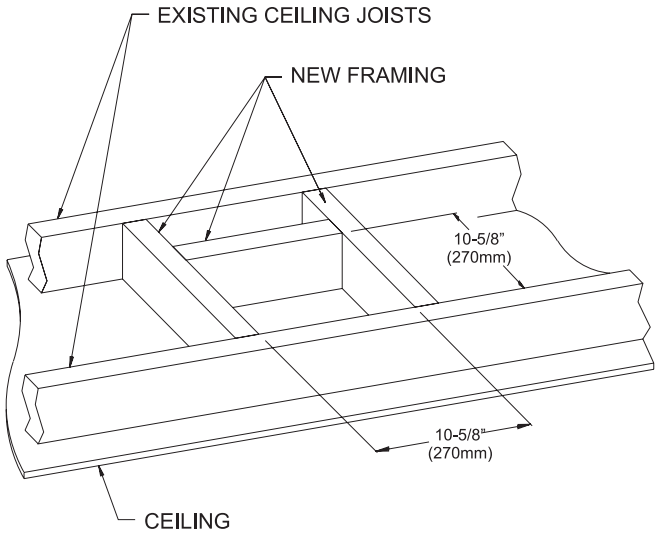

Figure 51

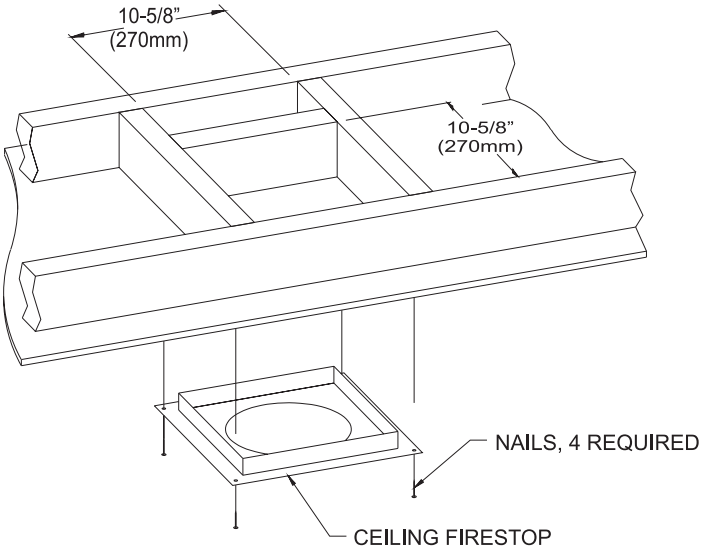

Figure 52

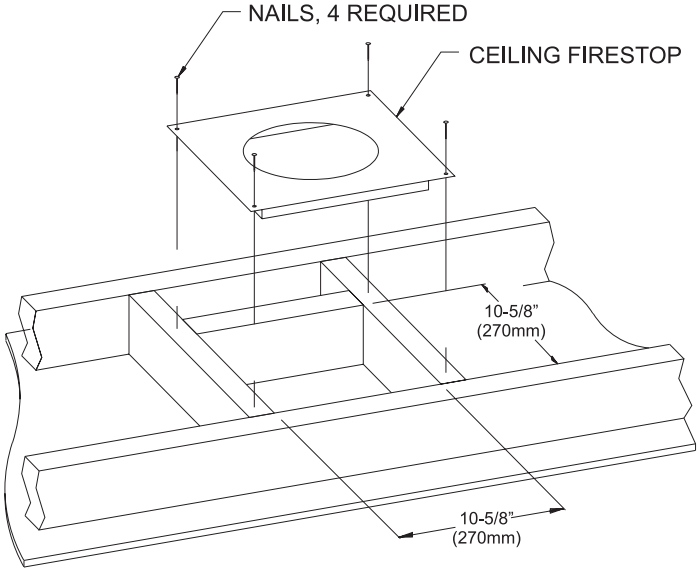

Figure 53

Finishing

Finish the walls with the material of your choice. **Figure 2** on Page 9 shows the minimum vertical and corresponding maximum horizontal dimensions of mantels or other combustible projections above the top front edge of the fireplace.

Only non-combustible materials may be used to cover the black fireplace front.

⚠ WARNING

When finishing the fireplace never obstruct or modify the air inlet/outlet louvers in any manner. Provide adequate clearances around air openings into the combustion chamber.

⚠ CAUTION

If the joints between the finished wall and the fireplace surround (top and sides) are sealed, a 300 Degree F minimum sealant material must be used. These joints are not required to be sealed. Only non-combustible material (using 300 Degree F minimum adhesive if needed), can be applied as facing to the fireplace surround.

DVVK-5F FLEX VENT INSTRUCTIONS

The **DVVK-5F FLEX VENT KIT** includes the following components:

- (1) Horizontal Termination Cap
- (1) 4-foot section of Flex vent with spacers (5” flue/8” outer pipe) with flue adapter collar
- (1) Wall Firestop/Thimble Assembly
- Hardware pack that includes band clamps and screws

Maintain at least ½-inch rise for every 12 inches of vent run.

⚠ CAUTION

- **Because of sharp edges, always use gloves when handling the flex vent components.**
- **Always follow the general venting requirements for vent terminal location, vent lengths, and clearance to combustible materials.**
- **If space permits, it is generally easier to attach venting in the top vent configuration.**
- **Always stretch and secure venting with wire or metal strapping to ensure that the horizontal runs do not sag.**
- **Vent connections should overlap a minimum of 1” for proper sealing.**

INSTALLATION

1. Unpack vent components and check that all items are included.
2. Check to see that the vent spacer springs are located around the flue vent at 8” intervals along its length. **See Figures 54 & 55.** If not, stretch the spacer springs to about 15” long and wrap them around the flue, then interlock the ends of each spring. Maintain equal distance between spring spacers.

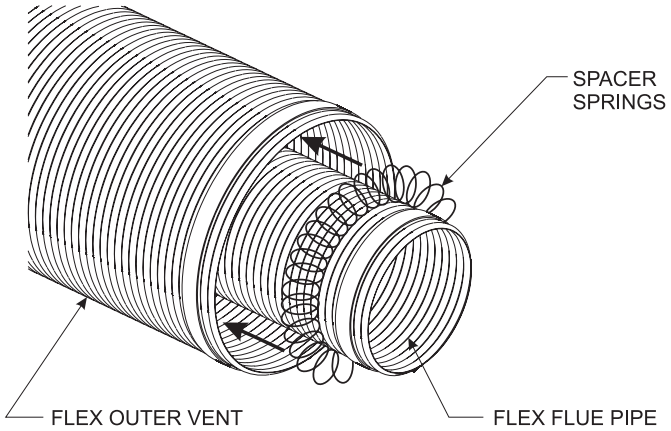

Figure 54

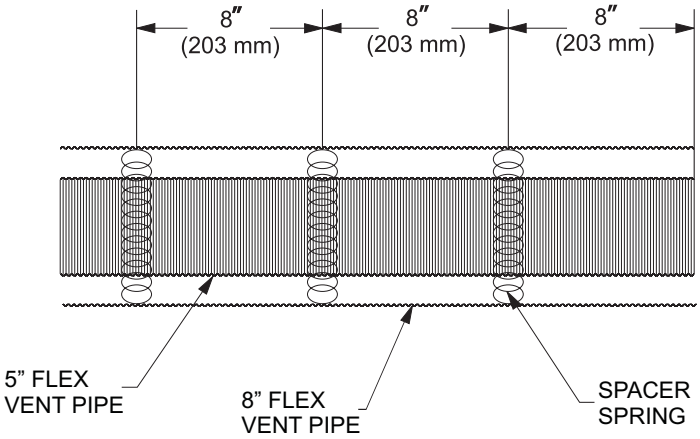

Figure 55

3. Attach a 6” piece of hard pipe to raise the connection point above the unit.
4. Use existing 8” diameter inlet collar to attach outer vent pipe.
5. Install the Wall Firestop/Thimble assembly as required through the wall. Refer to the venting charts in the fireplace manual to determine the proper height and size of the vent opening. The minimum opening should be 10” wide by 12” high. The minimum combustible clearance from the horizontal vent is 1” from sides and bottom, and 3” above the vent pipe. **See Figure 55.**
6. In most cases, after determining the length of the vent that is needed, it may be easier to install the flue and outer vent pipes to the Termination Cap first, then from the outside, feed the venting through the wall to the fireplace.
7. If the venting is to long, trim off any excess vent before attaching the vent end connectors.
8. Attach the Termination Cap to the outside of the house.

⚠ CAUTION

Do not use force when installing the Horizontal Vent Termination into the flex venting. Always stretch venting out first, then cut off excessive vent material prior to sliding the vent termination into the flue and inlet venting. Forcing the termination cap into the flex venting will deform the flue venting, which will restrict the exhaust gases, and cause improper operation of the fireplace.

9. Prior to making the vent connections, apply high temperature sealant (1000°F min.) to the vent connections before securing with the band clamps provided. Note: the flue pipe end without the adapter is to be installed to the Termination Cap.
10. Apply sealant to the outside of the flue pipe adapter and connect to the flex flue pipe. Then insert the adapter into the fireplace flue. Secure flue adapter to the fireplace flue with a minimum of two screws provided. **See Figure 56.**
11. Attach the Outer Vent pipe to the 8” diameter collar on the fireplace with a large band clamp provided. Sealant may also be used on the outer vent connections.
12. Check all vent connections for tightness. Make sure horizontal venting has the proper rise and combustible clearances required. Refer to venting charts in fireplace instruction manual.

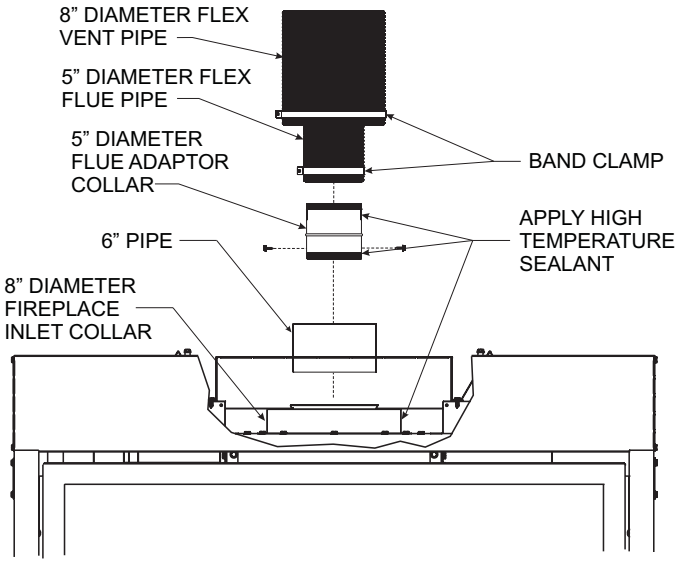

Figure 56

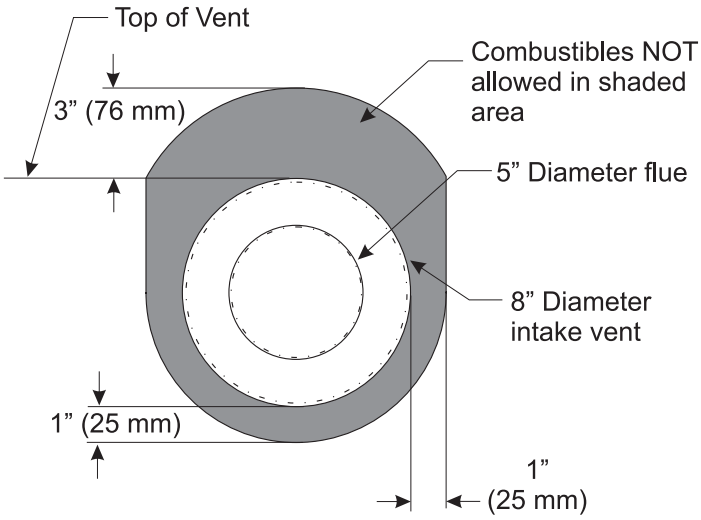

Figure 57

LINER PLACEMENT

Note: Install Ceramic Fiber or Reflective Liner before placing logs. Refer to the instructions that came with your Liner for proper installation.

GLOWING EMBERS

Use only the amount of glowing embers supplied with your fireplace. Applying excess glowing embers may adversely affect fireplace performance. If you mix in platinum embers (for a distinctive glow), remove a like amount of embers from the kit supplied with the fireplace. Tear the embers into dime-size pieces and fluff each piece to maximize the glow. Apply a single layer of embers in the shaded areas below.

NOTE: Replacement embers – either regular or platinum – must be purchased from Empire Comfort Systems.

NOTE: Embers break down over time. Remove old embers prior to reapplication.

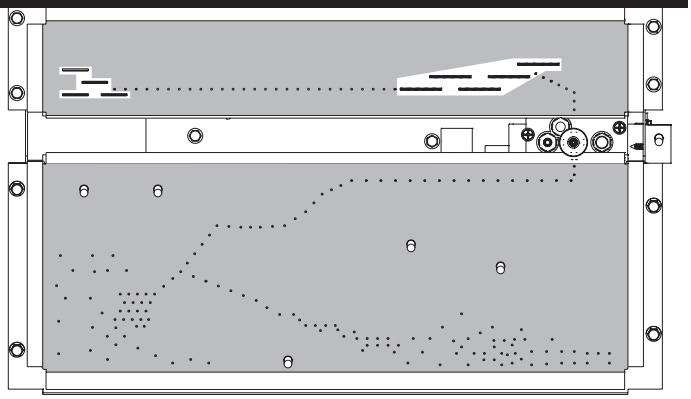

TOP View - Ember Placement Shown in Shaded Area
Figure 58

LOG IDENTIFICATION

Part Number & Description	Front View	Top View
34204 Front Right Log (A)		
34203 Center Left Log (B)		
34202 Front Left Log (C)		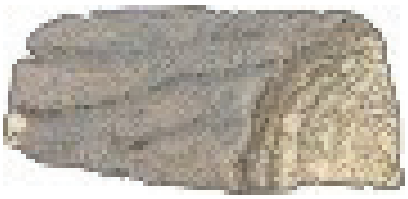
34207 Left Log (D)		
34208 Center Right Log (E)		
34209 Center Log (F)		
34210 Rear Log (G)		
34205 Right Log (H)		
34206 Chunk Log (I)		

USE ONLY MANUFACTURER'S REPLACEMENT PARTS. USE OF ANY OTHER PARTS COULD CAUSE INJURY OR DEATH.

Attention: When ordering parts, it is very important that **part number** and **description** of part coincide.

LOG PLACEMENT

1. Place Front Right Log (A) onto Burner Pins 1 and 2.

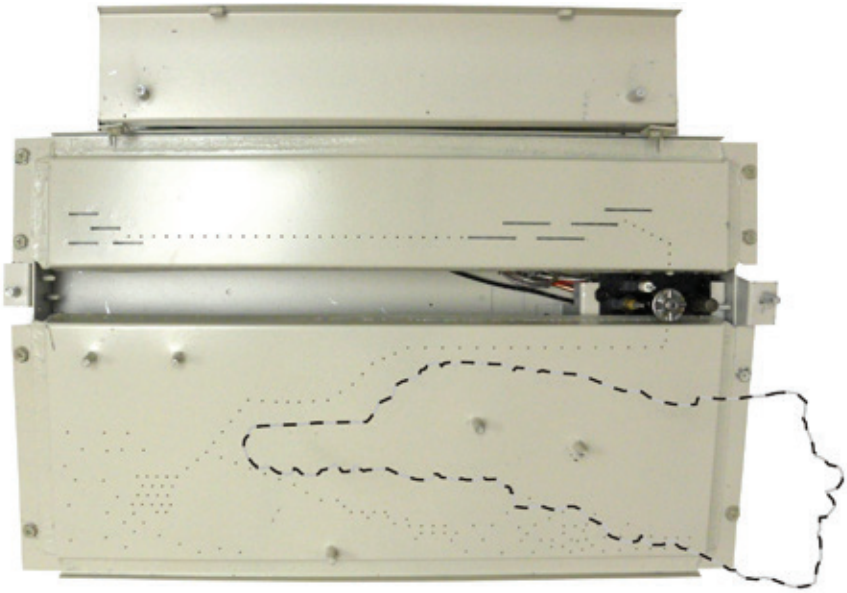

TOP VIEW

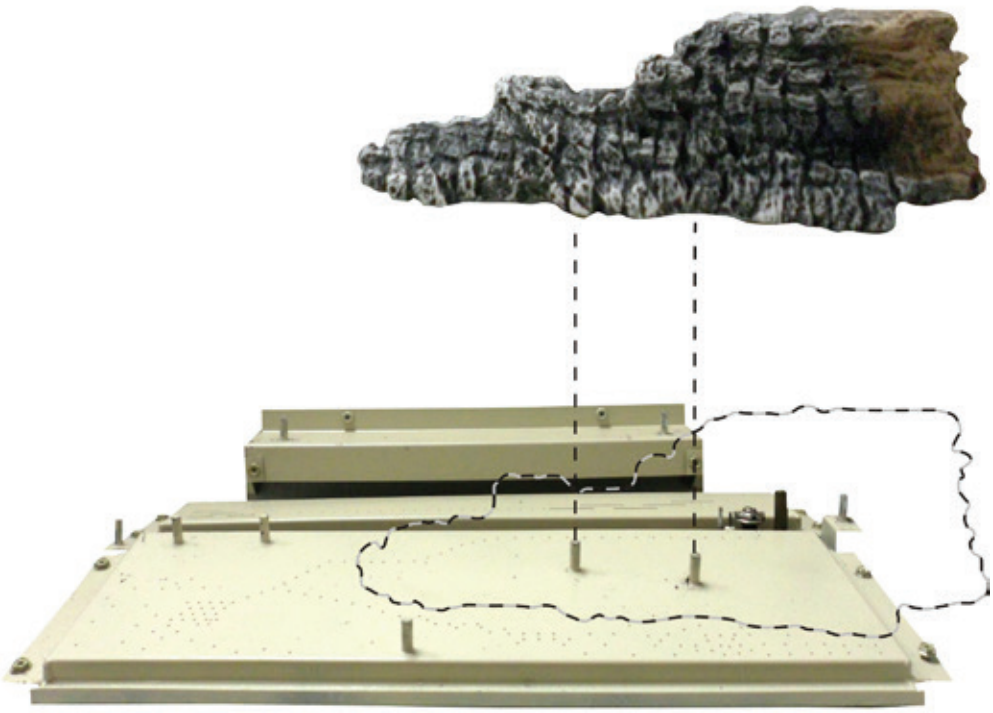

FRONT VIEW

Note: Ember material not shown for clarity.

LOG PLACEMENT

2. Place Center Left Log (B) onto Burner Pins 3 and 4.

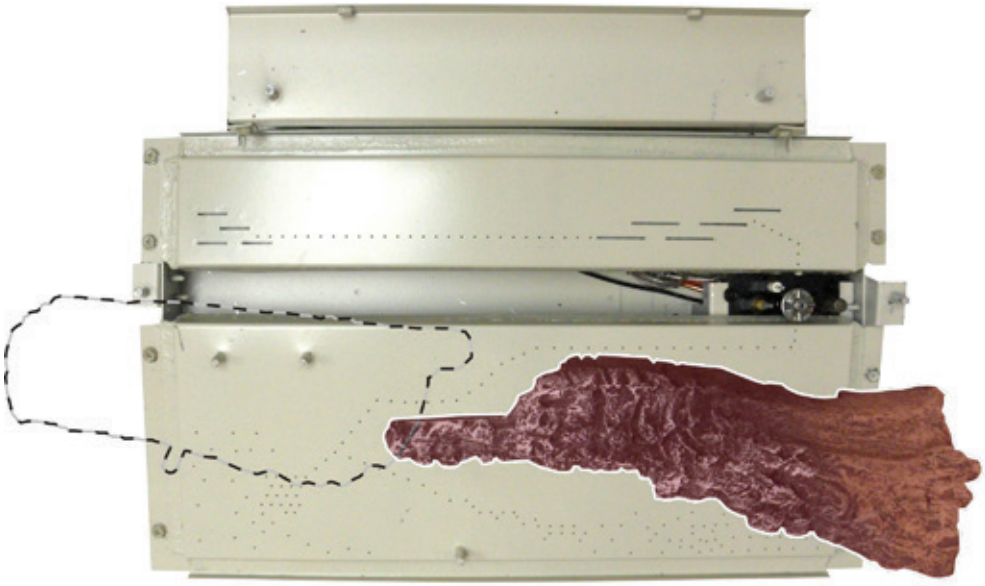

TOP VIEW

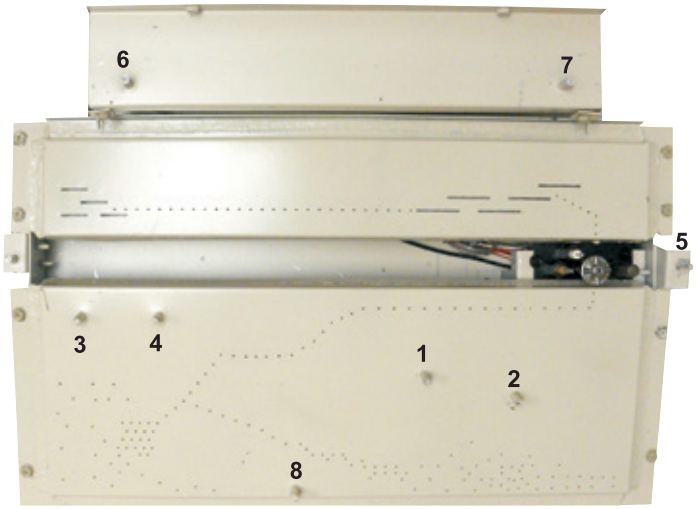

Burner Pin Layout

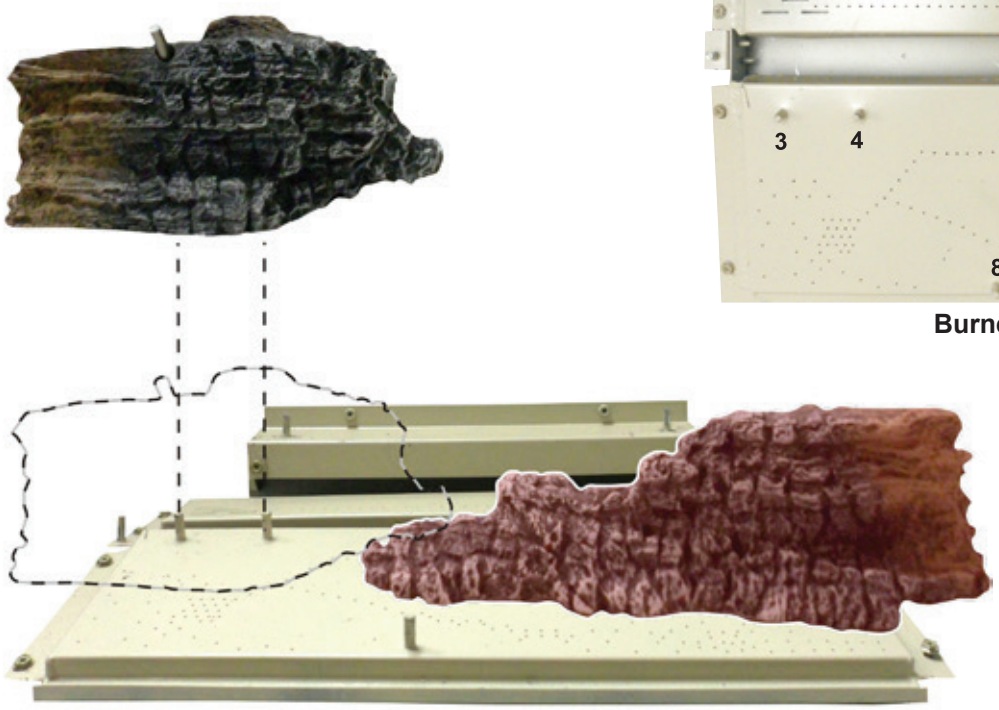

FRONT VIEW

Note: Ember material not shown for clarity.

3. Place Front Left Log (C) onto Right Pin on (B) Log.

TOP VIEW

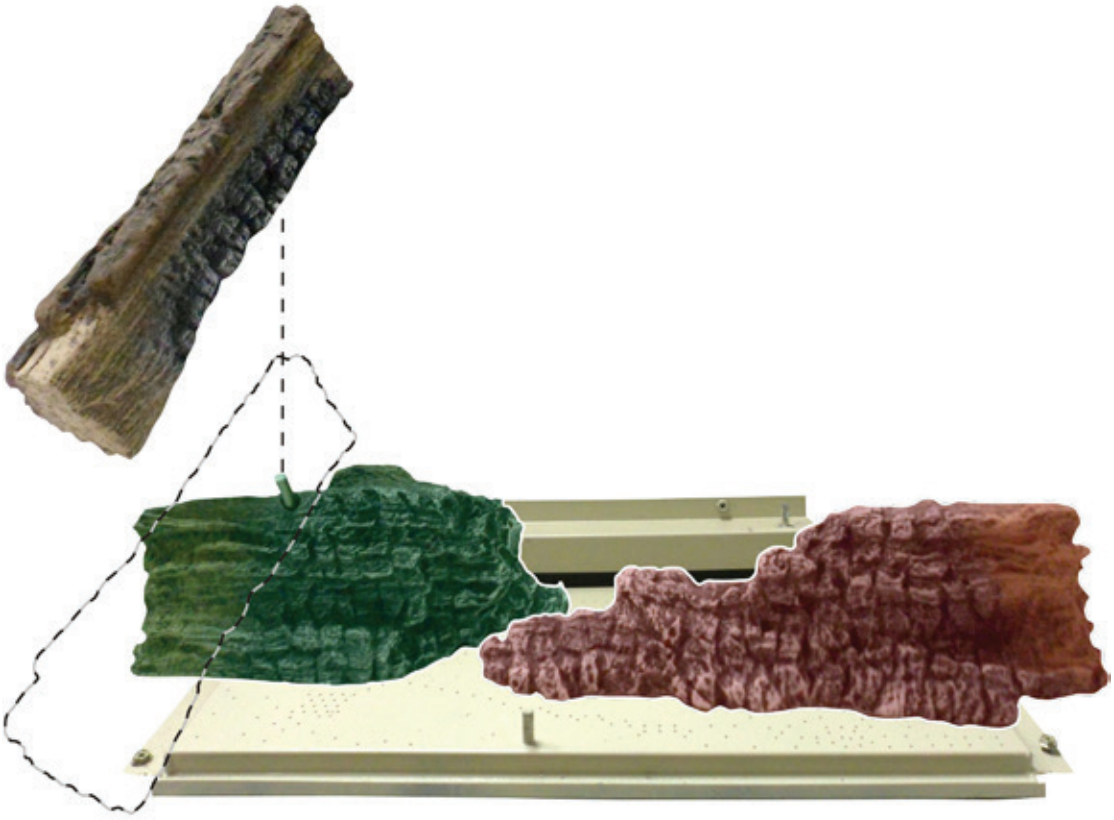

FRONT VIEW

Note: Ember material not shown for clarity.

LOG PLACEMENT

4. Place Left Log (D) onto Left Pin on (B) Log.

TOP VIEW

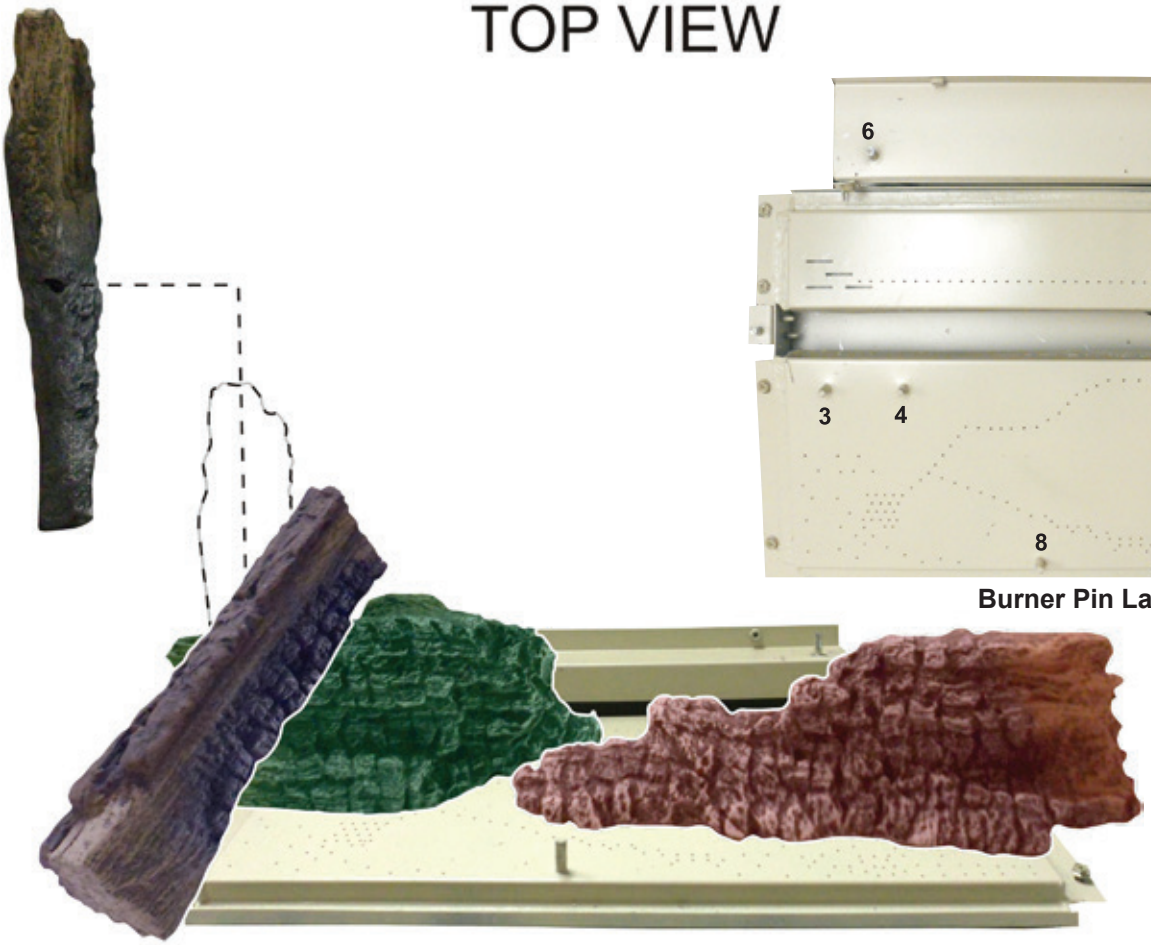

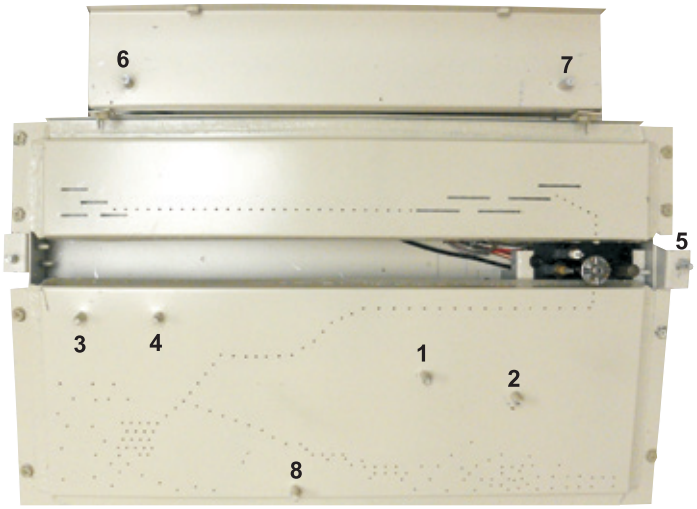

Burner Pin Layout

FRONT VIEW

Note: Ember material not shown for clarity.

5. Place Center Right Log (E) onto Burner Pin 5 and onto (A) Log.

TOP VIEW

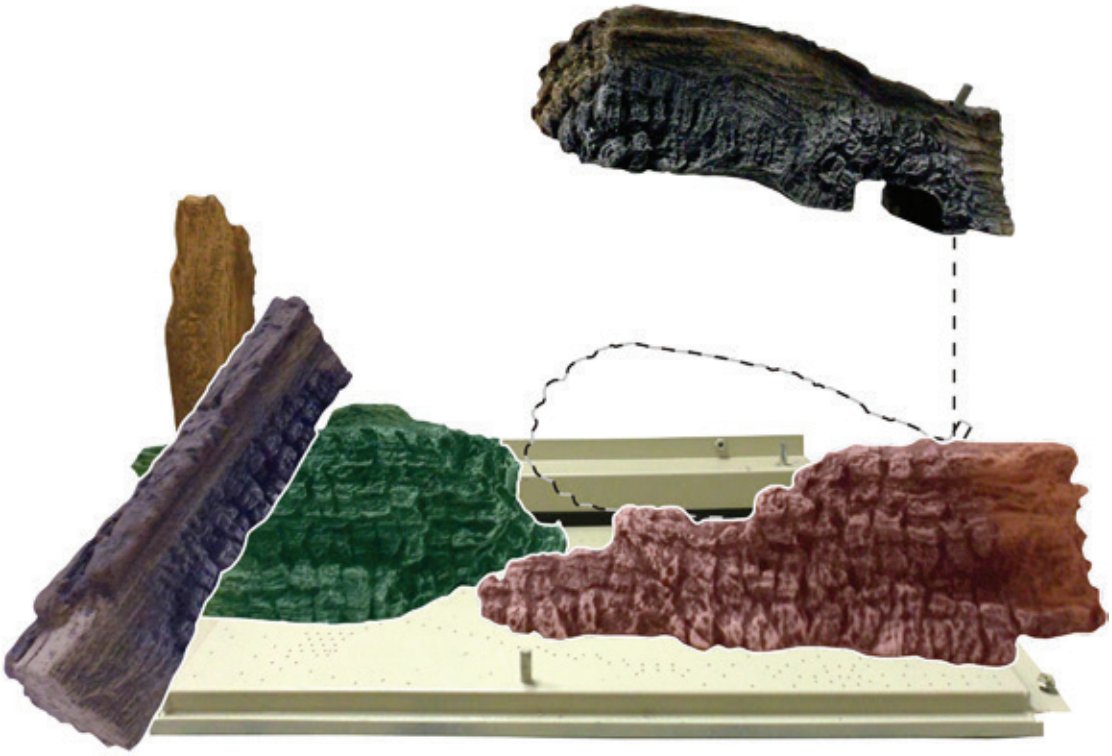

FRONT VIEW

Note: Ember material not shown for clarity.

LOG PLACEMENT

6. Place Center Log (F) onto Burner Pin 6 and Pin on (E) Log.

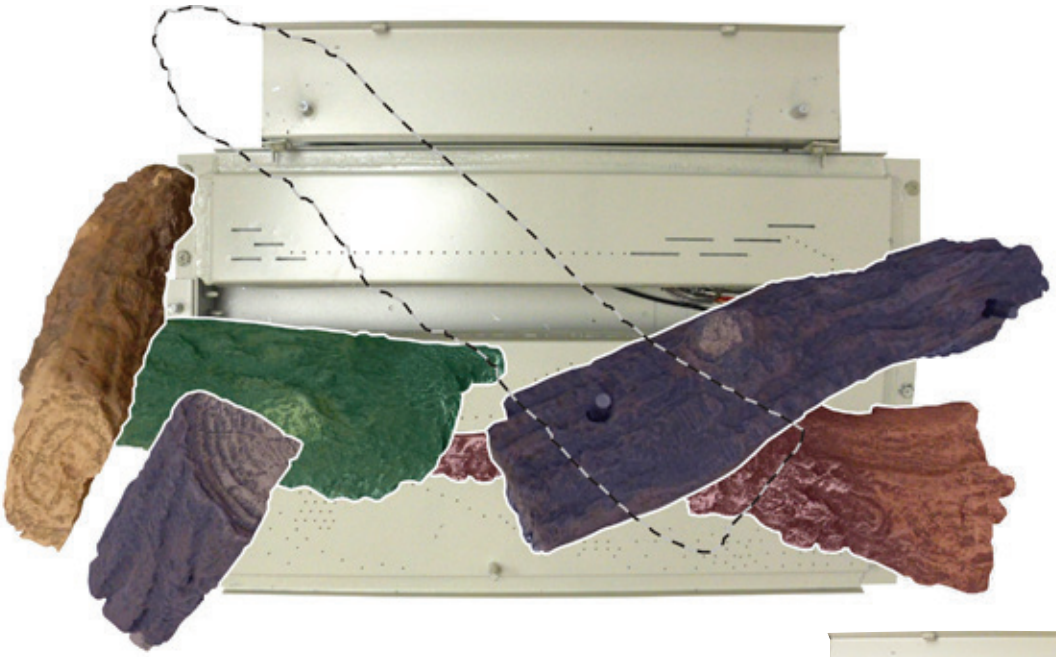

TOP VIEW

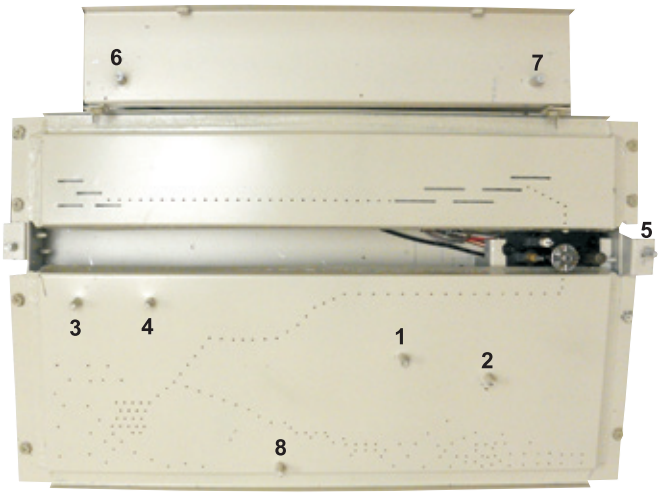

Burner Pin Layout

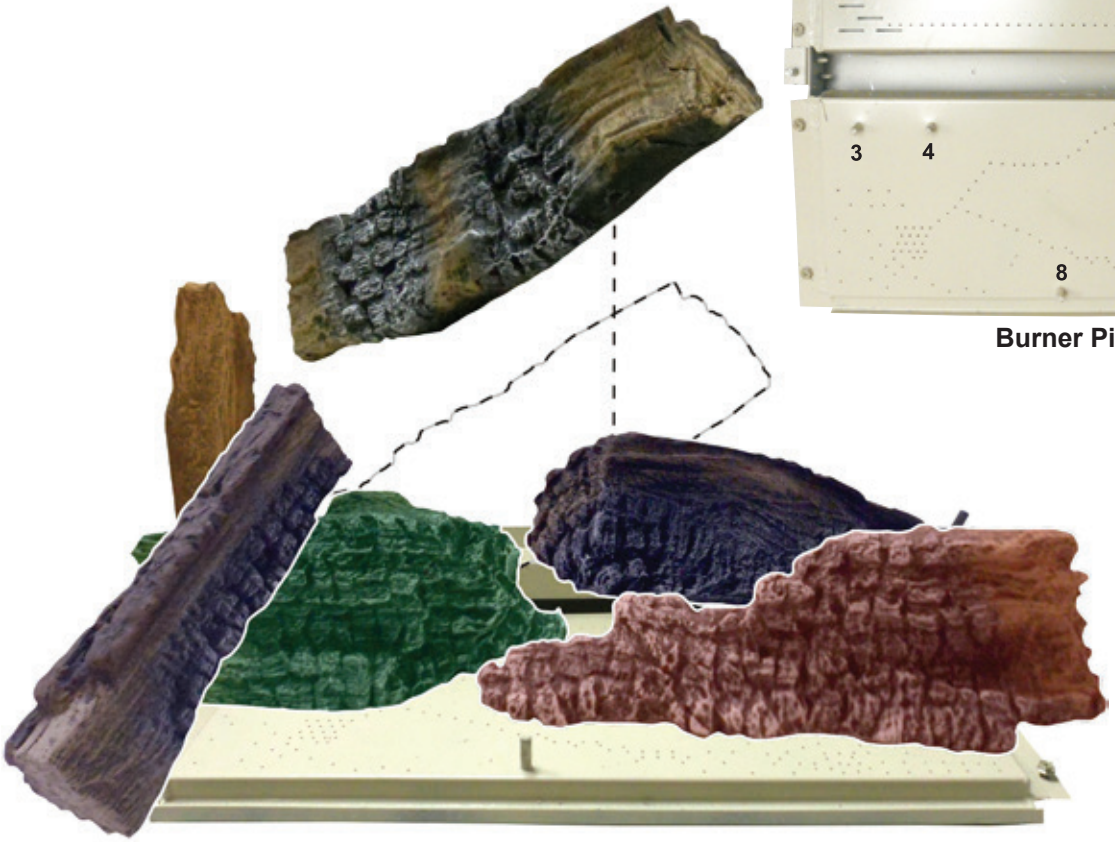

FRONT VIEW

Note: Ember material not shown for clarity.

LOG PLACEMENT

7. Place Rear Log (G) onto Burner Pin 7 and Pin on (F) Log.

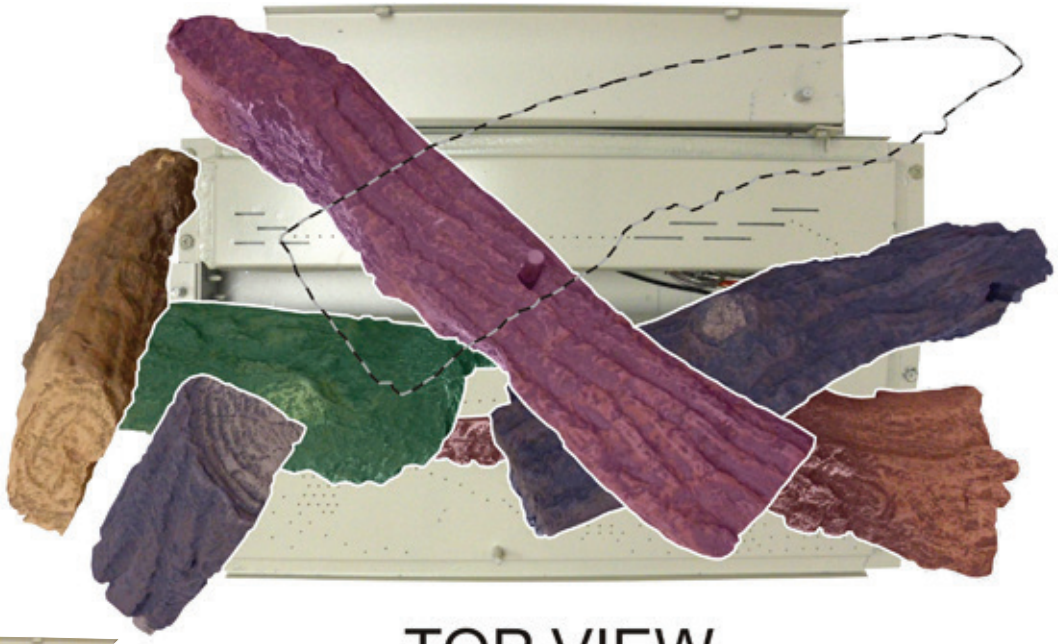

TOP VIEW

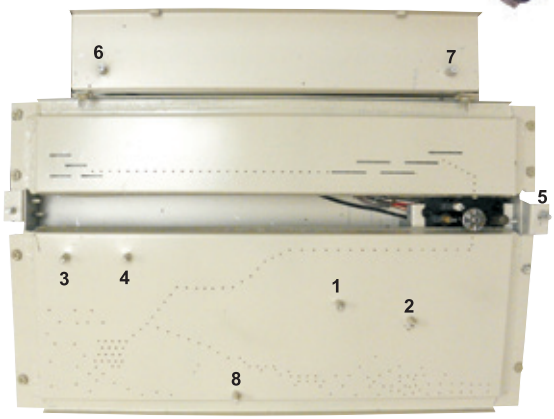

Burner Pin Layout

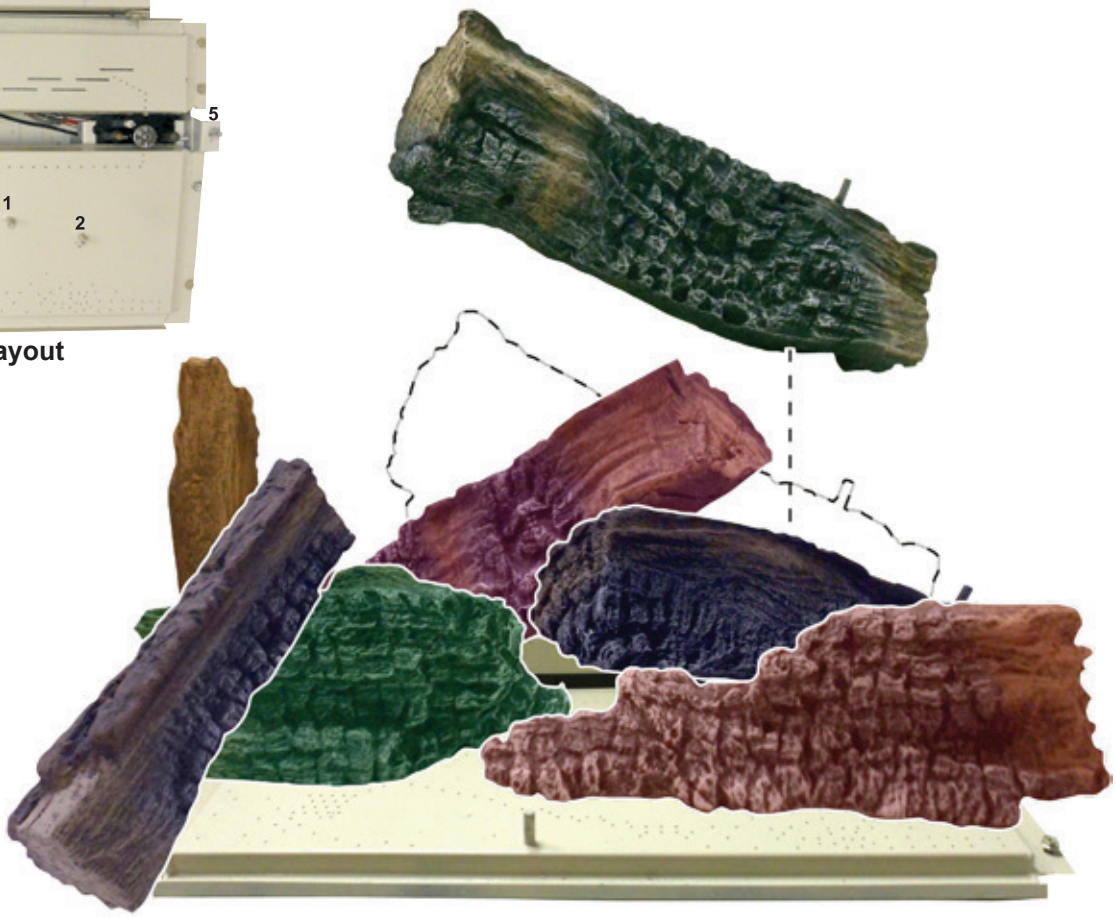

FRONT VIEW

Note: Ember material not shown for clarity.

LOG PLACEMENT

8. Place Right Log (H) onto Pins on (E) Log and (F) Log.

TOP VIEW

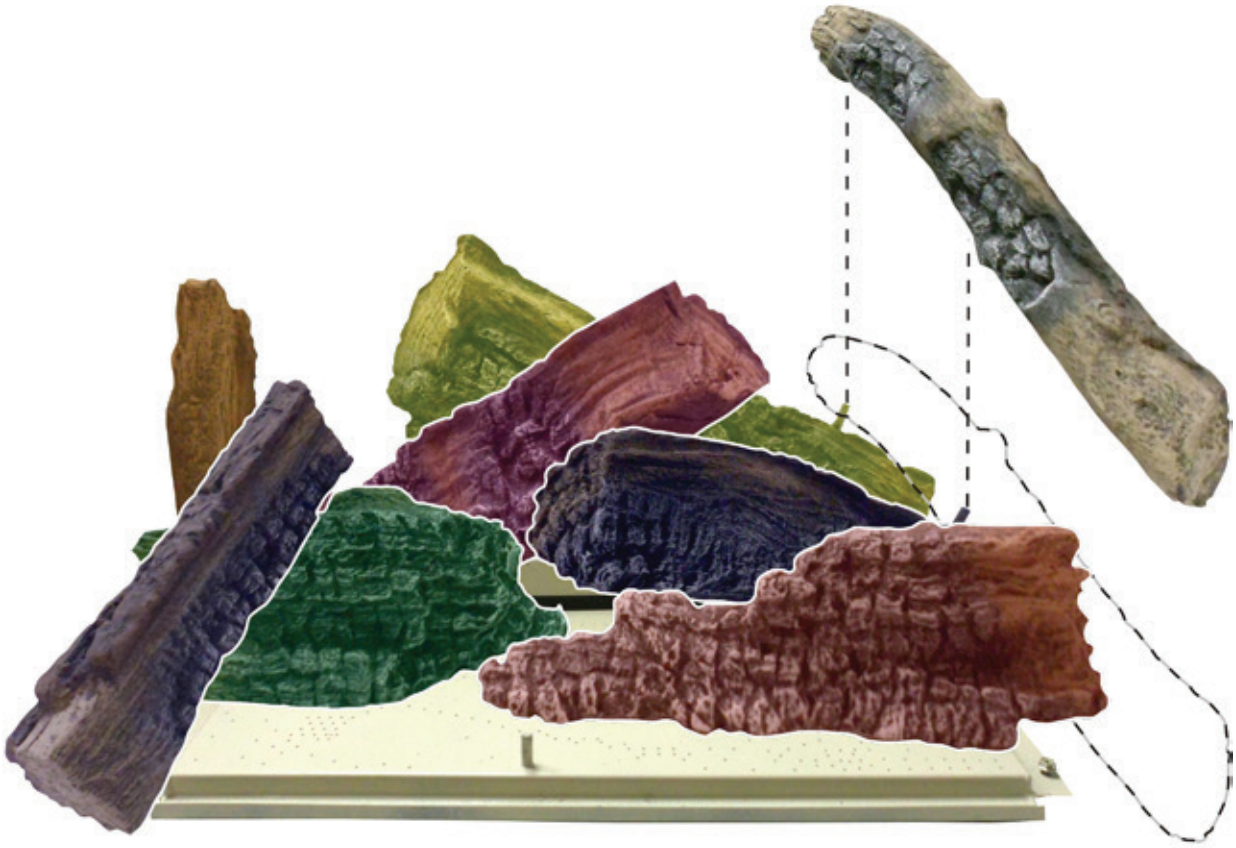

FRONT VIEW

Note: Ember material not shown for clarity.

LOG PLACEMENT

9. Place Chunk Log (I) onto Burner Pin 8 as shown.

TOP VIEW

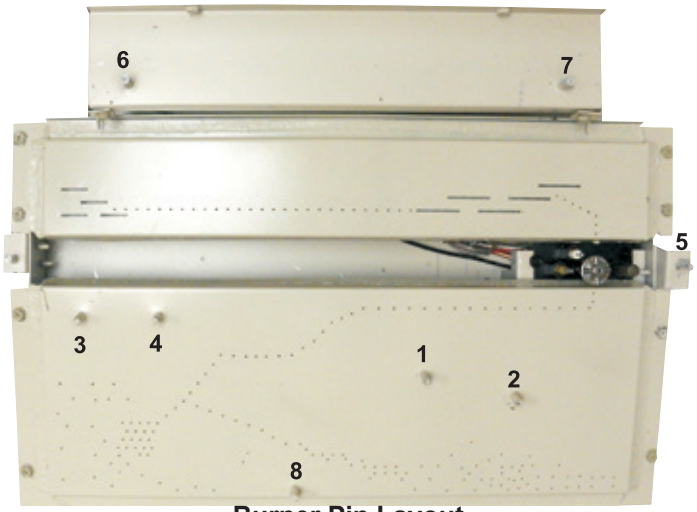

Burner Pin Layout

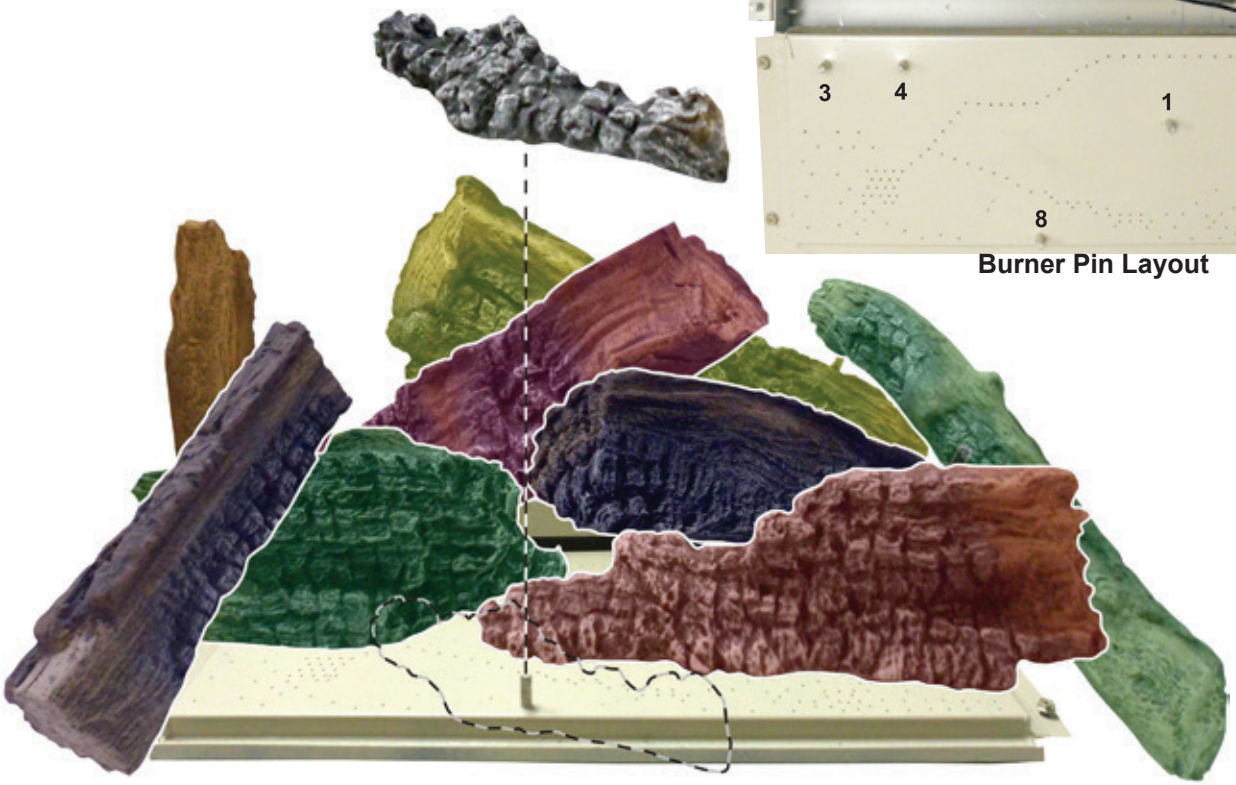

FRONT VIEW

Note: Ember material not shown for clarity.

LOG PLACEMENT

Completed Logset

TOP VIEW

FRONT VIEW

Note: Ember material not shown for clarity.

MILLIVOLT SYSTEM OPERATING INSTRUCTIONS

Millivolt System

The standing pilot burns continuously even when the main burner is OFF.

When you ignite the pilot, the thermopile produces millivolts (electrical current) which energizes the magnet in the gas valve. After 30 seconds you can release the gas control knob and the pilot will stay ON. Allow the pilot flame to burn an additional one to two minutes before you turn the gas control knob from the PILOT position to the ON position. This allows the millivolts current to build-up to a sufficient level to operate the gas control properly.

1. Follow the SAFETY and LIGHTING INSTRUCTIONS for standing pilot controls found in this manual and on labels found in control compartment behind the door assembly.

⚠ CAUTION

During the initial purging and subsequent lightings, never allow the gas valve control knob to remain depressed in the "pilot" position without pushing the piezo ignitor button at least once every second.

2. During the operating season, leave the control valve knob in the "ON" position. This will allow the pilot flame to remain lit. Turn the burner flame on or off with the fireplace REMOTE/ OFF/ON switch, wall switch or remote controls.

NOTE: The gas control valve allows you to increase or decrease the height of the main burner flame. The control valve has a pressure regulator with a knob as shown in **Figure 59.** Rotate the knob clockwise to "HI" to increase the flame height and counterclockwise to "LO" to decrease the flame height.

3. When the heating season ends, turn the REMOTE/OFF/ON switch to "OFF" and the control valve to "OFF". The system, including the pilot light, will be shut down.

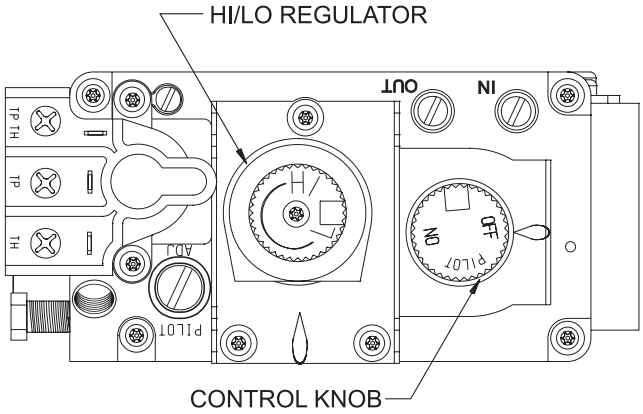

Figure 59

The OWNER should carefully read and follow these operating instructions.

Initial Lighting

Lower the door assembly to view the gas controls for the fireplace. Upon completing the gas line or turning the gas valve on after it has been in the "OFF" position, a small amount of air will be in the lines. When first lighting the fireplace, it will take a few minutes for the lines to purge this air. Once the purging is complete, the fireplace will light and operate satisfactorily.

Subsequent lightings of the appliance will not require purging if the gas valve is not turned to "OFF."

Pilot Flame

The pilot flame should cover the thermopile and thermocouple.

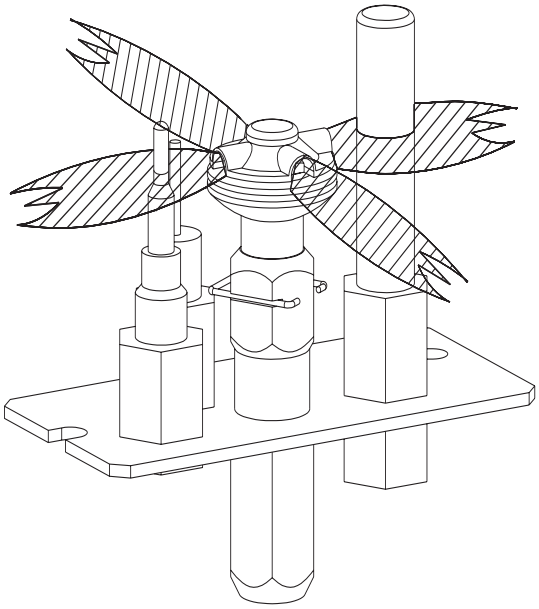

Figure 60

MILLIVOLT SYSTEM OPERATING INSTRUCTIONS

STANDING PILOT OPERATING INSTRUCTIONS

REMOTE/OFF/ON Switch

The fireplace is equipped with a REMOTE/OFF/ON switch. A wire harness is attached to the REMOTE/OFF/ON switch. The red, black and green (wires) female push-ons attach to the REMOTE/OFF/ON switch. At the opposite end of the wire harness, the black and green (wires) female push-ons attach to the gas valve. An additional green wire and the red wire, which are stripped and bare, will attach to one of the accessories that can be purchased for use with your fireplace.

Operation of REMOTE/OFF/ON Switch with no Accessories

To ignite main burner, turn the control knob on the gas valve from the PILOT position to the ON position. Turn the REMOTE/OFF/ON switch from the OFF position to the ON position. The additional green wire and red wire, which are stripped and bare are not used.

Wall Switch, FWS-1

Connect the green and red, stripped and bare, wires on the REMOTE/OFF/ON switch wire harness to the wall switch. Turn the REMOTE/OFF/ON switch to the REMOTE position. Pivot the rocker switch on the FWS-1 to the ON position.

Wall Thermostats (optional)

TRW - Wireless for Millivolt models
TMV - Reed switch for Millivolt models

Battery Operated Remote Controls, FRBC, FBRTC, and TRW

Connect the green and red, stripped and bare, wires on the REMOTE/OFF/ON switch wire harness to the remote receiver that is a component in the remote kit. Turn the REMOTE/OFF/ON switch to the REMOTE position. Follow instructions included with the remote to complete installation.

Note: If batteries fail in the remote, and immediate heat is desired, turn the REMOTE/OFF/ON switch from the REMOTE position to the ON position.

Installation of Remote Receiver

Place remote receiver on the floor of fireplace behind the louver as far forward as possible.

Attention: The Velcro loop and hook are not necessary in this installation but can be used to secure remote receiver.

Refer to remote control installation and operating instructions for more details on remote control.

Millivolt Control

The valve regulator controls the burner pressure which should be checked at the pressure test point. Turn captured screw counter clockwise 2 or 3 turns and then place tubing to pressure gauge over test point (Use test point “A” closest to control knob). After taking pressure reading, be sure and turn captured screw clockwise firmly to re-seal. Do not over torque. Check for gas leaks.

Millivolt thermopile is self generating. Gas valve does not require 24 volts or 110 volts.

Check System Operation

Millivolt system and all individual components may be checked with a millivolt meter 0-1000 MV range.

Use wire of a gauge proper for the length of the wire:

Recommended Wire Gauges

Maximum Length	Wire Gauge
1' to 10'	18
10' to 25'	16
25' to 35'	14

MILLIVOLT SYSTEM WIRING DIAGRAM

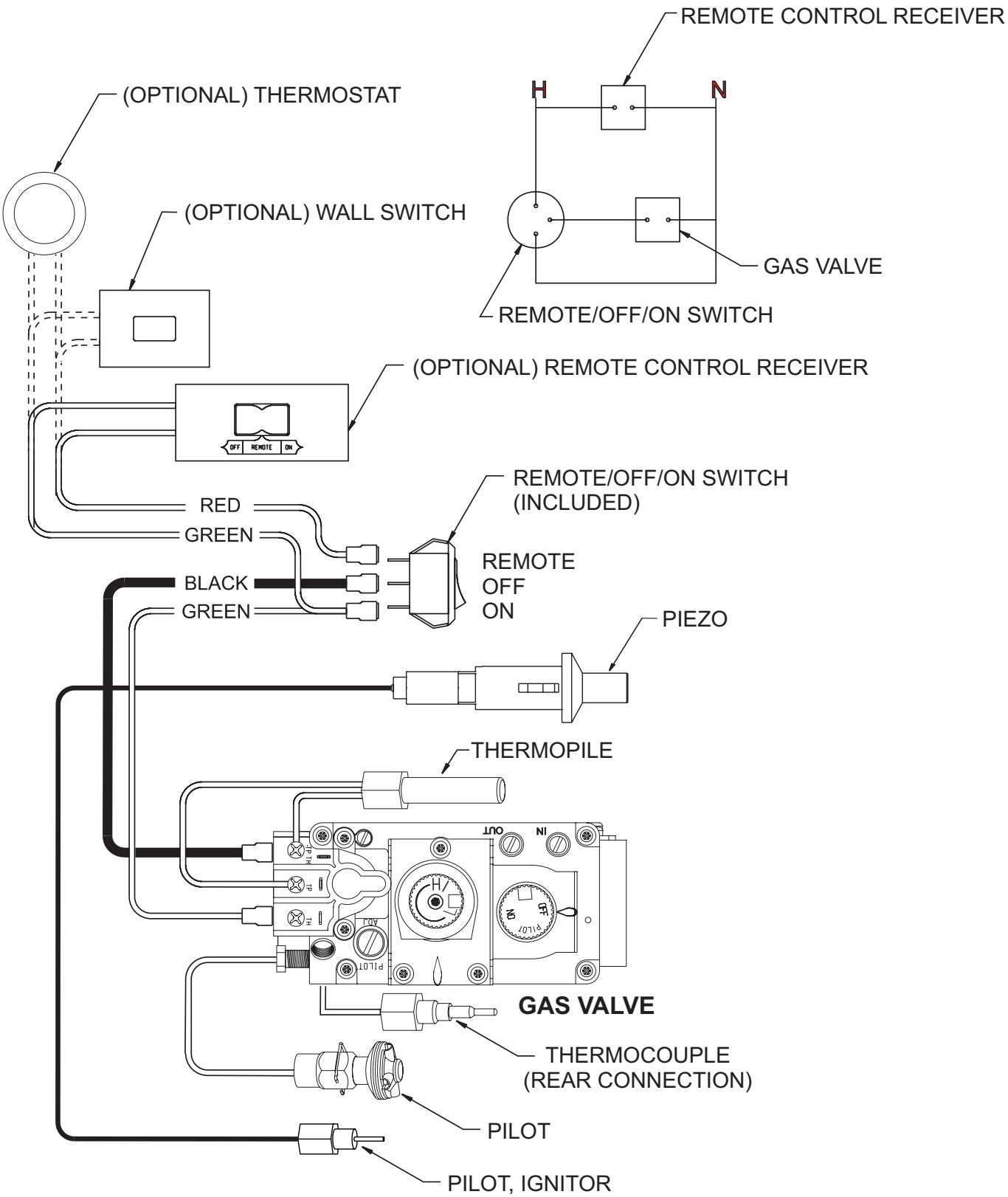

Figure 61

MILLIVOLT SYSTEM LIGHTING INSTRUCTIONS

FOR YOUR SAFETY READ BEFORE LIGHTING

If you do not follow these instructions exactly, a fire or explosion may result causing property damage, personal injury or loss of life

A. This appliance has a pilot which must be lighted by hand. When lighting the pilot, follow these instructions exactly.

B. Before lighting smell all around the appliance area for gas. Be sure to smell next to the floor because some gas is heavier than air and will settle on the floor.
What To Do If You Smell Gas
- Do not try to light any appliance.
- Do not touch any electrical switch;
- Do not use any phone in your building.
- Immediately call your gas supplier from a neighbor's phone. Follow the gas supplier's instructions.
- If you cannot reach your gas supplier, call the fire department.

C. Use only your hand to push in or turn the gas control knob. Never use tools. If the knob will not push in or turn by hand, don't try to repair it; call a qualified service technician. Force or attempted repair may result in a fire or explosion.

D. Do not use this appliance if any part has been under water. Immediately call a qualified service technician to inspect the appliance and to replace any part of the control system and any gas control which has been under water.

LIGHTING INSTRUCTIONS

1. Stop! Read the safety information above.
2. Set REMOTE/OFF/ON switch to OFF.
3. Turn off all electric power to the appliance (if applicable).
4. Lower bottom louver assembly.
5. Push in gas control knob slightly and turn clockwise to "OFF."

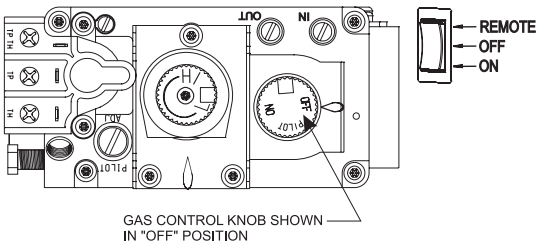

Note: Knob cannot be turned from "PILOT" to "OFF" unless knob is pushed in slightly. Do not force.

6. Wait ten minutes to clear out any gas. Then smell for gas, including near the floor. If you then smell gas, STOP! Follow "B" in the safety information above. If you do not smell gas, go to the next step.

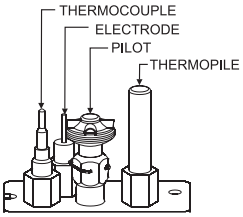

7. Find pilot - Follow metal tube from gas control. The pilot is behind the burner on the right side.
8. Turn gas control knob counterclockwise to "PILOT."
9. Push in control knob all the way and hold in. Repeatedly push the piezo ignitor button until the pilot is lit. Continue to hold the control knob in the for about one minute after the pilot is lit. Release knob, and it will pop back up. Pilot should remain lit. If it goes out, repeat steps 5 through 9.
   - If the control knob does not pop up when released, STOP and IMMEDIATELY call a qualified service technician or gas supplier.
   - If the pilot will not stay lit after several tries, turn the gas control knob to "OFF" and call your service technician or gas supplier.
10. Turn gas control knob counterclockwise to "ON."
11. Close bottom louver assembly.
12. Turn on all electric power to the appliance (if applicable).
13. Set REMOTE/OFF/ON switch to desired setting.

TO TURN OFF GAS TO FIREPLACE

1. Set REMOTE/OFF/ON switch to OFF.
2. Turn off all electric power to the appliance if service is to be performed (if applicable).
3. Lower bottom louver assembly.
4. Push in gas control knob slightly and turn clockwise to "OFF." Do not force.
5. Close bottom louver assembly.

MILLIVOLT SYSTEM TROUBLESHOOTING

With proper installation and maintenance, your new Direct Vent Gas Fireplace will provide years of trouble-free service. If you do experience a problem, refer to the Trouble Shooting Guide below. This guide will assist a qualified service person in the diagnosis of problems and the corrective action to be taken.

1. **Spark ignitor will not light pilot after repeated triggering of piezo ignitor button.**
   a. Defective ignitor (no spark electrode)
   —Check for spark at electrode and pilot; if no spark and electrode wire is properly connected, replace ignitor.
   b. No gas or low gas pressure.
   —Check remote shut off valves from fireplace. Usually there is a valve near the main. There can be more than one valve between the fireplace and main.
   —Low pressure can be caused by a variety of situations such as a bent line, too narrow diameter of pipe, or low line pressure. Consult with plumber or gas supplier.
   c. No LP in tank.
   —Check LP (propane) tank. Refill tank.
2. **Pilot will not stay lit after carefully following lighting instructions.**
   a. Defective thermocouple.
   —Check that pilot flame impinges on thermocouple. Clean and/or adjust pilot for maximum flame impingement.
   —Ensure the thermocouple connection at the gas valve is fully inserted and tight (hand tight plus 1/4 turn). Faulty thermocouple if reading is below specified minimum of 15 millivolts.
   —Disconnect the thermocouple from the valve, place one millivolt meter lead wire on the end of the thermocouple and the other millivolt meter lead wire on the thermocouple copper wire. Start the pilot and hold the valve knob in. If the millivolt reading is less than 15 millivolt, replace the thermocouple.
   b. Defective valve.
   —If thermocouple is producing more than 15 millivolts, replace faulty valve.
3. **Pilot burning, no gas to burner, valve knob "ON", REMOTE/OFF/ON switch "ON."**
   a. REMOTE/OFF/ON switch, wall switch, remote control or wires defective.
   —Check REMOTE/OFF/ON switch and wires for proper connections. Place jumper wires across terminal at switch. If burner comes on, replace defective switch. If OK, place jumper wires across switch wires at gas valve-if burner comes on, wires are faulty or connections are bad.
   b. Thermopile may not be generating sufficient millivolts.
   —If the pilot flame is not close enough physically to the thermopile, adjust the pilot flame.
   —Be sure the wire connections from the thermopile at the gas valve terminals are tight and the thermopile is fully inserted into the pilot bracket.
   —Check the thermopile with a millivolt meter. Take the reading at TH-TP & TP terminals of the gas valve. The meter should read 350 millivolts minimum, while holding the valve knob depressed in the PILOT position, with the pilot lit, and the REMOTE/OFF/ON switch in the OFF position. Replace the faulty thermopile if the reading is below the specified minimum.
   —With the pilot in the ON position, disconnect the thermopile leads from the valve. Take a reading at the thermopile leads. The reading should be 350 millivolts minimum. Replace the thermopile if the reading is below the minimum.
   c. Defective valve.
   —Turn valve knob to ON. Place REMOTE/OFF/ON switch to ON. Check with millivolt meter at thermopile terminals. Millivolt meter should read greater than 200 millivolts. If the reading is okay and the main burner does not ignite, replace the gas valve.
   d. Plugged main burner orifice.
   —Check main burner orifice for blockage and remove.
4. **Frequent pilot outage problem.**
   a. Pilot flame may be too high or too low, or blowing (high), causing pilot safety to drop out.
   —Clean and adjust flame for maximum flame impingement on the thermocouple. Follow lighting instructions carefully.
5. **The pilot and main burner extinguish while in operation.**
   a. No LP (Propane) in tank.
   Check LP (Propane) tank. Refill fuel tank.
   b. Inner vent pipe leaking exhaust gases back into system
   —Check for leaks.
   c. Glass too loose, gasket leaks in corners after usage.
   —Be certain glass assembly is installed correctly.
   d. Horizontal vent improperly pitched.
   —The horizontal vent cap should slope down only enough to prevent any water from entering the unit. The maximum downwards slope is 1/4 inch.
   e. Bad thermopile or thermocouple.
   —Replace if necessary.
   f. Improper vent cap installation.
   —Check for proper installation and freedom from debris or blockage.
6. **Glass soots.**
   a. Flame impingement on logs.
   —Check and adjust log position. Contact Empire Comfort Systems, Inc.
   b. Debris around throat of main burner.
   —Inspect the opening at the base of the main burner. It is imperative that NO material be placed in this opening.
7. **Flame burns blue and lifts off main burner.**
   a. Insufficient oxygen being supplied.
   —Check to make sure vent cap is installed properly and free of debris. Make sure that vent system joints are tight and have no leaks.
   —Check to make sure that no material has been placed at the main burner base.

This page intentionally left blank.

MILLIVOLT SYSTEM PARTS VIEW

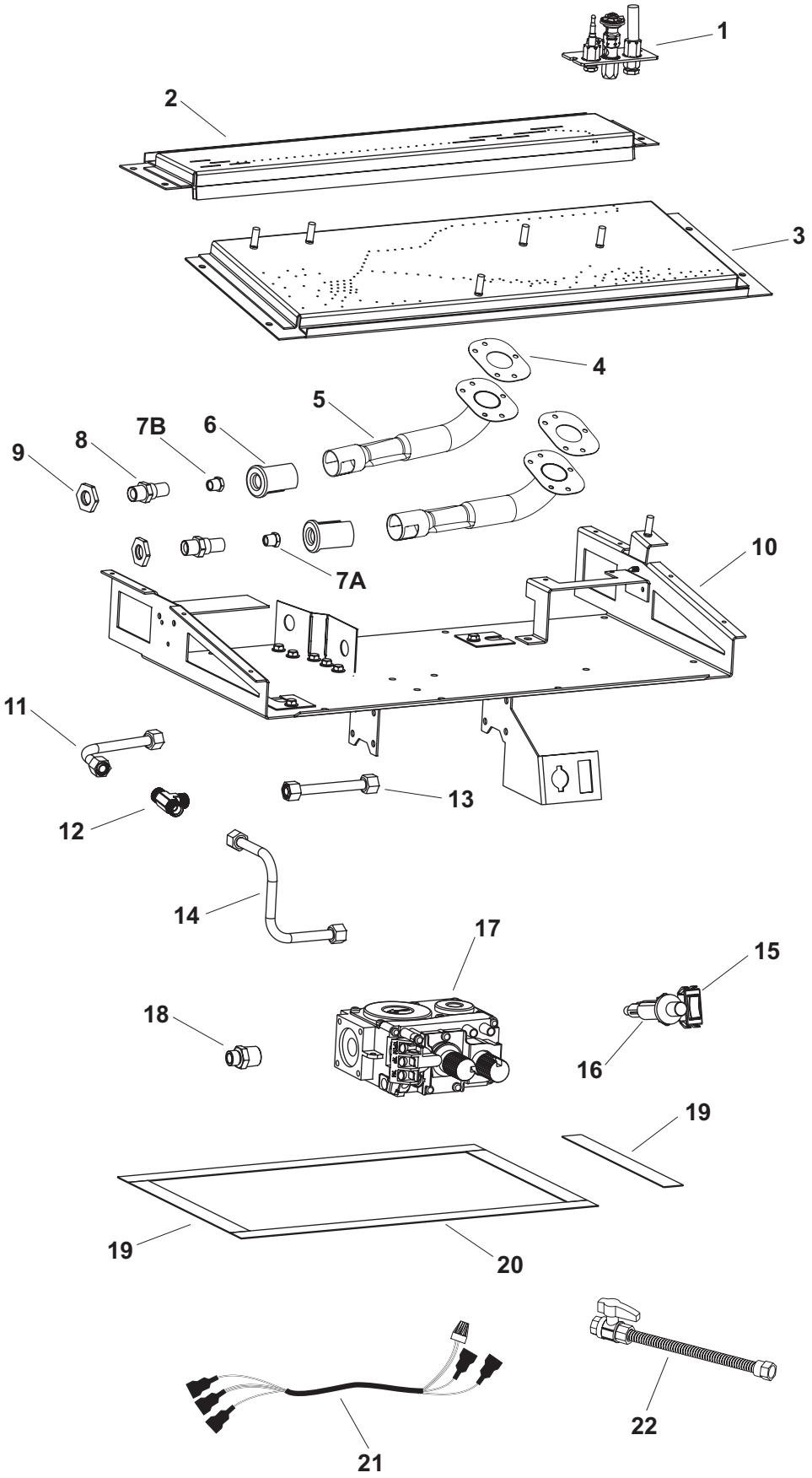

MILLIVOLT SYSTEM PARTS LIST

INDEX NO.	PART NUMBER DVCX36	PART NUMBER DVCX42	DESCRIPTION
1	34007	34007	PILOT ASSEMBLY, NAT
1	34008	34008	PILOT ASSEMBLY, LPG
2	34003	34003	BURNER REAR WELDED ASSEMBLY
3	34004	34004	BURNER FRONT WELDED ASSEMBLY
4	R11977	R11977	VENTURI GASKET (QTY. 2)
5	R11978	R11978	VENTURI (QTY. 2)
6	R7624	R7624	AIR SHUTTER (QTY. 2)
7A	P311	N/A	FRONT ORIFICE #47 - NAT
7A	P321	N/A	FRONT ORIFICE #58 - LP
7A	N/A	P252	FRONT ORIFICE #44 - NAT
7A	N/A	P320	FRONT ORIFICE #57 - LP
7B	P286	N/A	REAR ORIFICE #42 - NAT
7B	P208	P208	REAR ORIFICE #1.45mm - LP
7B	N/A	P257	REAR ORIFICE #40 - NAT
8	R11675	R11675	ORIFICE HOLDER (QTY. 2)
9	R7572	R7572	JAMB NUT, 1/4”-18 NPS (QTY. 2)
10	34034	34034	BURNER SUB-ASSEMBLY
11	33003	33003	TUBING ASSEMBLY, INLET - REAR
12	R11862	R11862	CONNECTOR, BRASS COMPRESSION TEE
13	33002	33002	TUBING ASSEMBLY, INLET - FRONT
14	33624	33624	TUBING ASSEMBLY, INLET
15	R3436	R3436	SWITCH, REMOTE OFF/ON
16	R9760	R9760	IGNITOR, PIEZO W/RED
17	R7577	R7577	VALVE, NAT
17	R7578	R7578	VALVE, LPG
18	R2423	R2423	CONNECTOR, MALE 5/16 X 3/8 NPT
19	17626	17626	GASKET, 3/4” X 7” (QTY. 3)
20	17625	17625	GASKET, 3/4” X 13 3/4” (QTY. 2)
21	R10947	R10947	WIRE ASSEMBLY
22	R7591	R7591	FLEXLINE 3/8 X 12 WITH SHUTOFF

N/A - Part not applicable for that particular unit.

⚠ WARNING

USE ONLY MANUFACTURER’S REPLACEMENT PARTS. USE OF ANY OTHER PARTS COULD CAUSE INJURY OR DEATH.

INTERMITTENT PILOT ELECTRONIC SYSTEM OPERATING INSTRUCTIONS

The electronic control valve system includes the ability to switch the pilot from a standing pilot mode to an intermittent pilot mode.

- **IPI Mode** - In the Intermittent Pilot mode when the unit is turned ON, it will cause spark to the pilot, light the pilot, then allow the burner to light. When the unit is turned OFF, both the burner and pilot will turn OFF.
- **CPI Mode** - In Continuous Pilot mode the pilot remains ON when the burner is turned OFF.

Note: A small toggle switch is located on the front of the module tray switches from IPI (left) to the CPI (right).
See Figure 62.

When the unit is turned ON, the electrical current will energize a spark to the pilot igniter. Once the pilot sensor heats up (after a few seconds), the valve will be energized, allowing gas to flow to the burner.

1. Follow the SAFETY and LIGHTING INSTRUCTIONS for Intermittent Pilot controls found in this manual, and on labels found in the control compartment located in the lower cavity of the appliance.
2. During the heating season (or in power outage periods), it is recommended that the pilot remain in the CPI (standing pilot mode) to reduce cold start issues, and/or conserve battery backup power during a power outage.
3. The gas valve has inlet and outlet pressure taps as shown in **Figure 62.** Refer to Page 13 for gas pressure requirements.

Note: The gas control has a manual HI/LO flame adjustment knob. **See Figure 62.** Rotate the HI/LO knob counterclockwise to “HI” to increase the flame height, and clockwise to “LO” to decrease the flame height. The BTU change from HI to LO is 37,000 BTU to 26,000 BTU.

OPTIONAL REMOTE CONTROLS

Optional remote controls are available for use with this appliance. Place the remote receiver in a wall outlet box with extended wiring, on the fireplace hearth, behind the left side surround panel, or in the control compartment area as far forward in the insert as possible.

The placement options for the remote receiver are given to allow flexibility, however battery life will be extended when the receiver is placed in a cool area.

To connect the remote receiver to the appliance, first disconnect the ON/OFF switch wires from the white and green wire connectors and connect the wires from the remote receiver to the green and white wire connectors. See Page 53.

Follow the instructions included with the remote control for programming and operating.

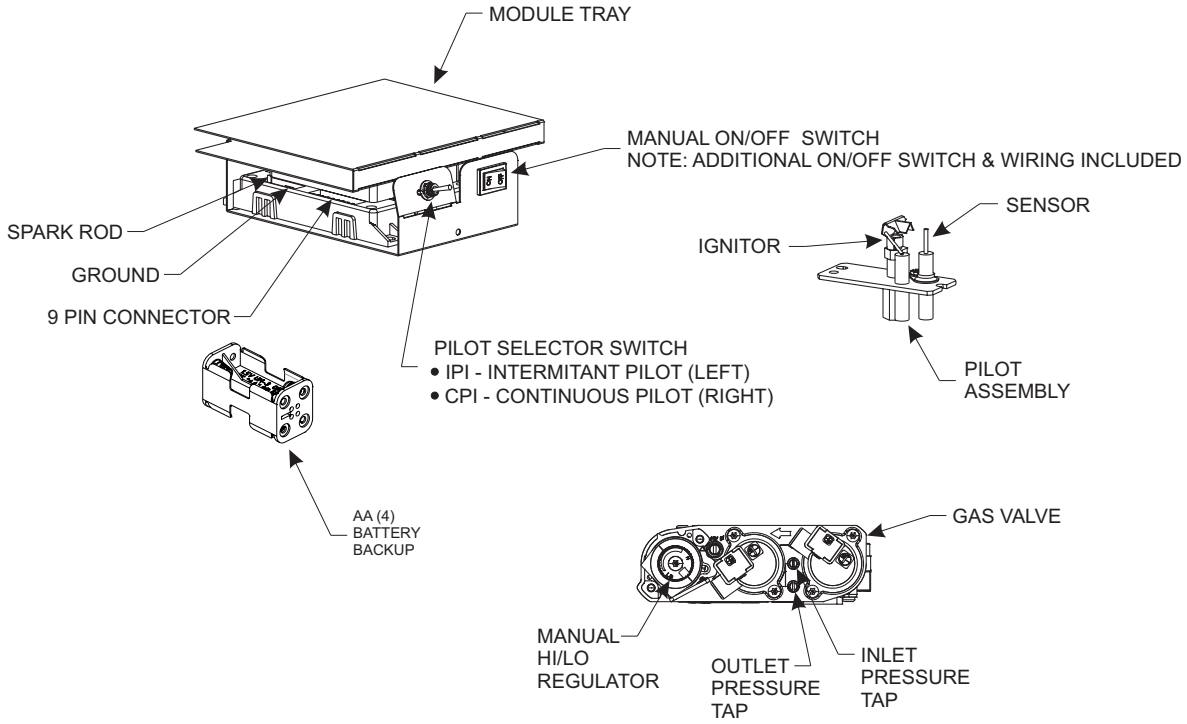

Figure 62

INTERMITTENT PILOT ELECTRONIC SYSTEM WIRING DIAGRAM

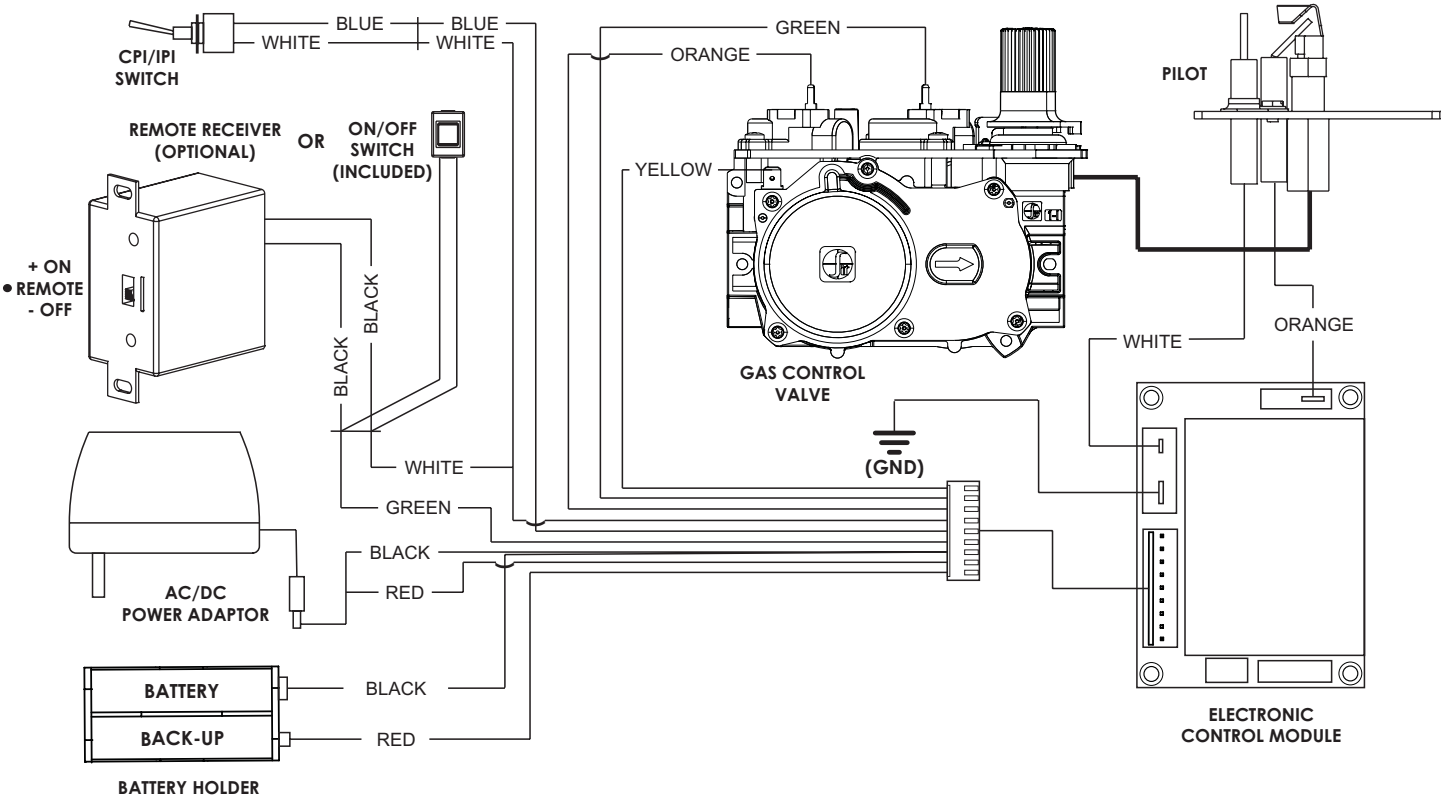

INTERMITTENT PILOT LIGHTING INSTRUCTIONS

FOR YOUR SAFETY READ BEFORE LIGHTING

⚠ WARNING

If you do not follow these instructions exactly, a fire or explosion may result causing property damage, personal injury or loss of life

A. This appliance has a pilot which can be lighted with the manual on/off switch, a remote control, or by switching the receiver switch to the “ON” position. When lighting the pilot, follow these instructions exactly.

B. BEFORE LIGHTING smell all around the appliance area for gas. Be sure to smell next to the floor because some gas is heavier than air and will settle on the floor.
WHAT TO DO IF YOU SMELL GAS
Do not try to light any appliance. Do not touch any electrical switch. Do not use any phone in your building. Immediately call your gas supplier from a neighbor’s phone. Follow the gas supplier’s instructions. If you can not reach your gas supplier, call the fire department.

C. Use only the remote control or manual remote receiver switch to operate the gas valve. Never use tools. If valve does not operate, don’t try to repair it, call a qualified service technician. Force or attempted repair may result in a fire or explosion.

D. Do not use this appliance if any part has been under water. Immediately call a qualified service technician to inspect the appliance and to replace any part of the control system and any gas control which has been under water.

LIGHTING INSTRUCTIONS

1. STOP! Read the safety information above.
2. Turn OFF electric power to the appliance.
3. Remove front surround panel assembly or bottom louver if included.
4. Turn gas cock counterclockwise to “On” position.
5. Wait ten minutes to clear out any gas. Then smell for gas, including near the floor. If you smell gas, STOP! Follow “B” in the safety information above on this page. If you do not smell gas, go to the next step.
6. Turn ON electric power to the appliance.
7. Find pilot - Follow metal tube from gas control. The pilot is behind the burner on the right side.
8. Turn main flame to on. If the pilot does not light within 60 seconds, stop and go to Step 5.
9. Refer to remote control instructions for detailed information, control features, and operation. Note: There is a CPI/IPI switch that allows for a continuous standing pilot mode or an intermittent pilot mode. See appliance manual for location of this switch. If the pilot or burner does not stay lit (in the standing pilot mode), stop and immediately call a qualified service technician or gas supplier.
10. If the burner or pilot does not operate properly after several tries, turn the gas cock clockwise to “OFF” and call your service technician or gas supplier.
11. Replace the front surround assembly or close bottom louver assembly.
12. Operation of the gas valve is controlled by a manual on/off switch or a hand held remote control. Refer to remote instructions for detailed operation information.

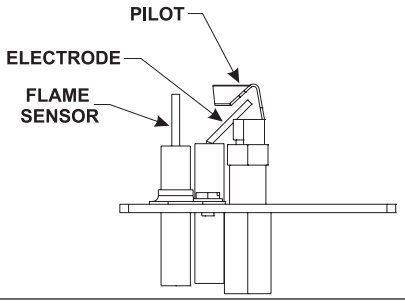

GAS COCK

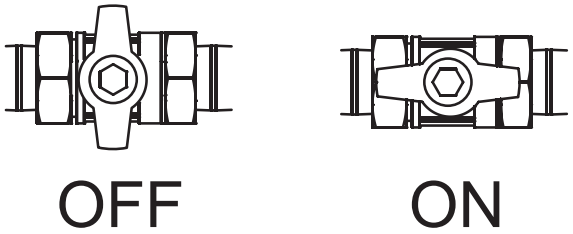

TO TURN OFF GAS TO FIREPLACE

1. Turn off all electric power to the appliance if service is to be performed (if applicable).
2. Gain access to control compartment. Remove surround panel assembly if necessary.
3. Locate On/Off gas cock and turn clockwise to “OFF”. Do not force.
4. Close bottom louver assembly, if included.

INTERMITTENT PILOT CONTROL SYSTEM TROUBLESHOOTING

Components

The gas valve is fitted with a manual HI/LO knob to allow for manual modulation of the gas outlet pressure to the appliance burner. The controls are designed to be used with either LPG or Natural Gas and can be converted by use of an OEM supplied conversion kit.

The Digital Fireplace Control (DFC) is an automatic gas ignition system based on a single micro-controller core. This control manages all functions related to ignition, flame sensing and supervision for atmospheric applications.

The DFC can be set to provide continuous or intermittent ignition control sequences and flame monitoring with safety shutdown in case of failure.

The DFC is set up as a stand alone (AC powered system with battery back up. See Lighting Instructions on Page 54 and Wiring Diagram on Page 53.

This appliance is only for use with the type of gas indicated on the rating plate in this appliance and may be installed in an aftermarket, permanently located, manufactured (mobile) home where not prohibited by local codes. This appliance is not convertible for use with other gases, unless a certified kit is used.

⚠ WARNING

Improper installation, adjustment, alteration, service or maintenance can cause property damage, personal injury or loss of life. Installation and service must be performed by a qualified installer, service agency or the gas supplier.

Troubleshooting

Before proceeding with the procedures in the following troubleshooting table, verify that the power supply (AC/DC adapter) is present and that the batteries inside the receiver and/or optional battery pack are fresh and installed with correct polarity.

Make sure all the connections between the wire harnesses and system components are proper and positive.

Verify that the static inlet pressure meets the manufacturer's recommended inlet pressure. If necessary adjust the line pressure regulator.

If the recommended actions for the following troubleshooting chart do not help to address the problem consider replacing wiring harnesses.

⚠ WARNING

Any actions performed on the gas valve must be in accordance with this instruction manual. Likewise, any actions performed on the Digital Fireplace Control (DFC) or other system components must be done in accordance with the individual component instructions.

Replacement of components must be performed in accordance with this instructions manual.

INTERMITTENT PILOT CONTROL SYSTEM TROUBLESHOOTING

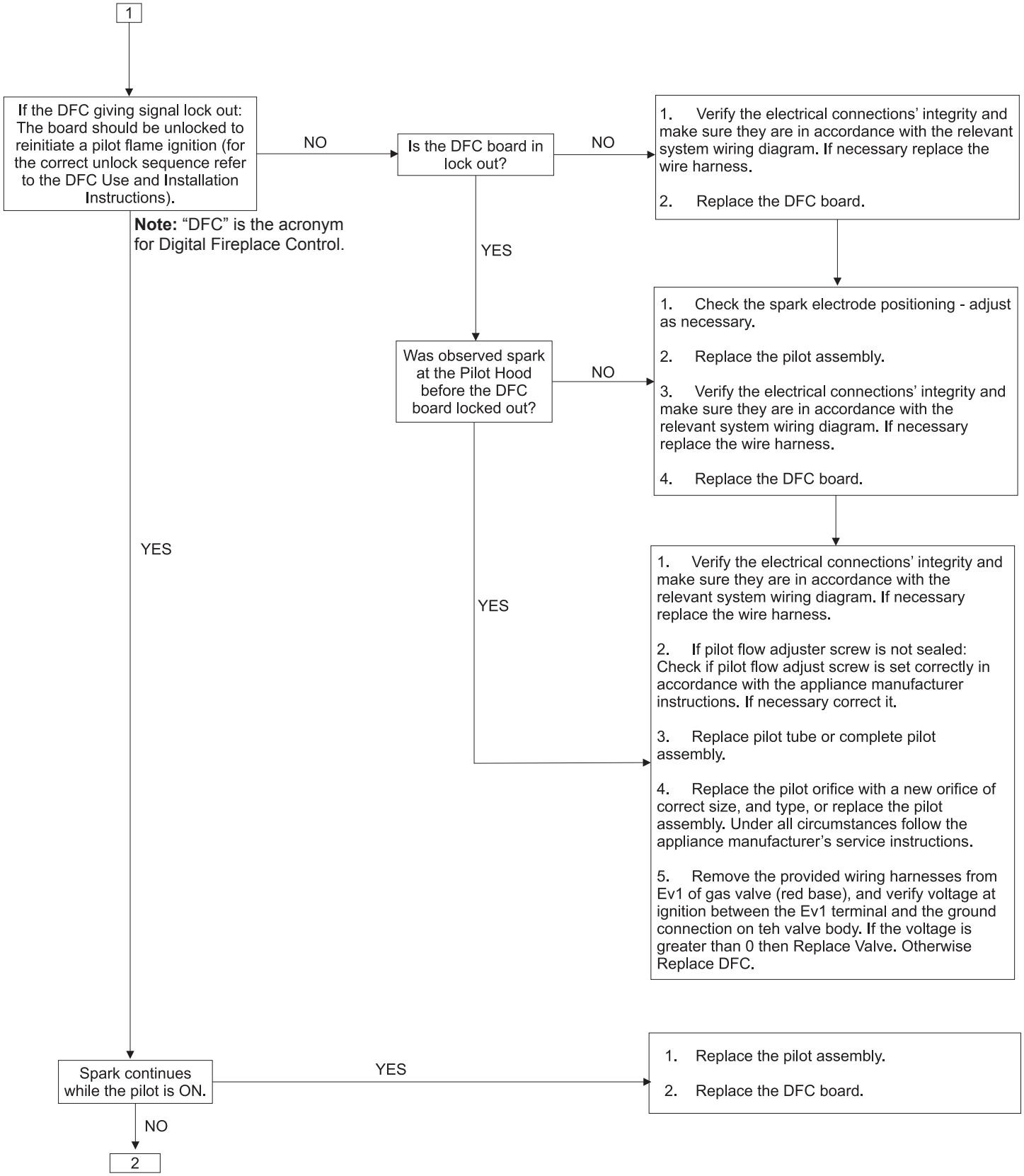

INTERMITTENT PILOT CONTROL SYSTEM TROUBLESHOOTING

2

Main burner lights when the pilot only should light.

YES →

1. Replace DFC board.
2. Replace the gas valve.

Note: "DFC" is the acronym for Digital Fireplace Control.

NO ↓

Pilot holds the flame?.

NO →

1. Verify the pilot flame fully engulfs the tip of the sense electrode. If not replace the pilot assembly.
2. Replace the pilot assembly.
3. Carefully clean the electrical connections of the sense cable, and the DFC board sense cable connection.
4. Replace the sense cable, or the cable-sense electrode assembly, or the pilot assembly.
5. Verify the pilot is properly grounded.
6. Replace the pilot orifice with a new orifice of correct size, and type, or replace the pilot assembly.
7. If pilot flow adjuster screw is not sealed, correct it.

YES ↓

Main burner ignites?

NO →

1. Verify the electrical connections' integrity and make sure they are in accordance with the relevant system wiring diagram. If necessary replace the wire harness.
2. Check if the optional remote transmitter is in "thermostat" or "on" mode and verifyt there is a call for heat (f using a thermostat remote). Adjust the setting for heat.
3. Verify that the pilot hood is properly fitted and a pilot flame is directed to properly ignite the main appliance burner.
4. Replace the main burner orifice with a new orifice of correct size and type, or replace the pilot assembly. Under all circumstances follow the service instructions.
5. Remove the provided wiring harnesses from EV2 of gas valve (red base), and verify voltage at ignition between the EV1 terminal and the ground connection on the valve body.
   5.1 If the voltage is greater than 0 then Replace Valve.
   5.2 Or Replace DFC.
6. Check the pressure at the outlet pressure test point out according to the manufacturer's instruction. If not in accordance, replace the gas valve.

YES ↓

Main burner remains ON

NO →

1. Verify the electrical connections' integrity and make sure they are in accordance with the relevant system wiring diagram. If necessary replace the wire harness.
2. Check the pressure at the outlet pressure test point out according the manufacturer's instruction. If not in accordance replace the gas valve.
3. With the system in the OFF position, connect the voltmeter between the EV2 terminal (green base) on the valve, and the ground on the valve body.
   Turn the system ON, let pilot light, and observe the following voltage sequence: once the pilot flame is proved, the voltage on EV2 should spike to approx. 5 VdC for approx. 2 sec and then drop to approx. 0.6 VdC continuously.
   3.1 If the sequence is respected, replace the gas valve.
   3.2 If the sequence is not respected, replace the DFC board.

↓

Main burner modulates properly?

→

1. Replace the main burner orifice with a new orifice of correct size (partial blockage possible). Verify that the main burner flame modulates manually. If it does not modulate replace the gas valve.
2. Verify that the gas valve outlet pressure limits are in accordance with the manufacturer specifications. If not replace the gas valve.

FOR MANUAL HI/LO VERSION

3. Verify the flame changes while rotating the HI/LO knob on the front of the gas valve. If there is no change replace the gas valve.

INTERMITTENT PILOT PARTS VIEW

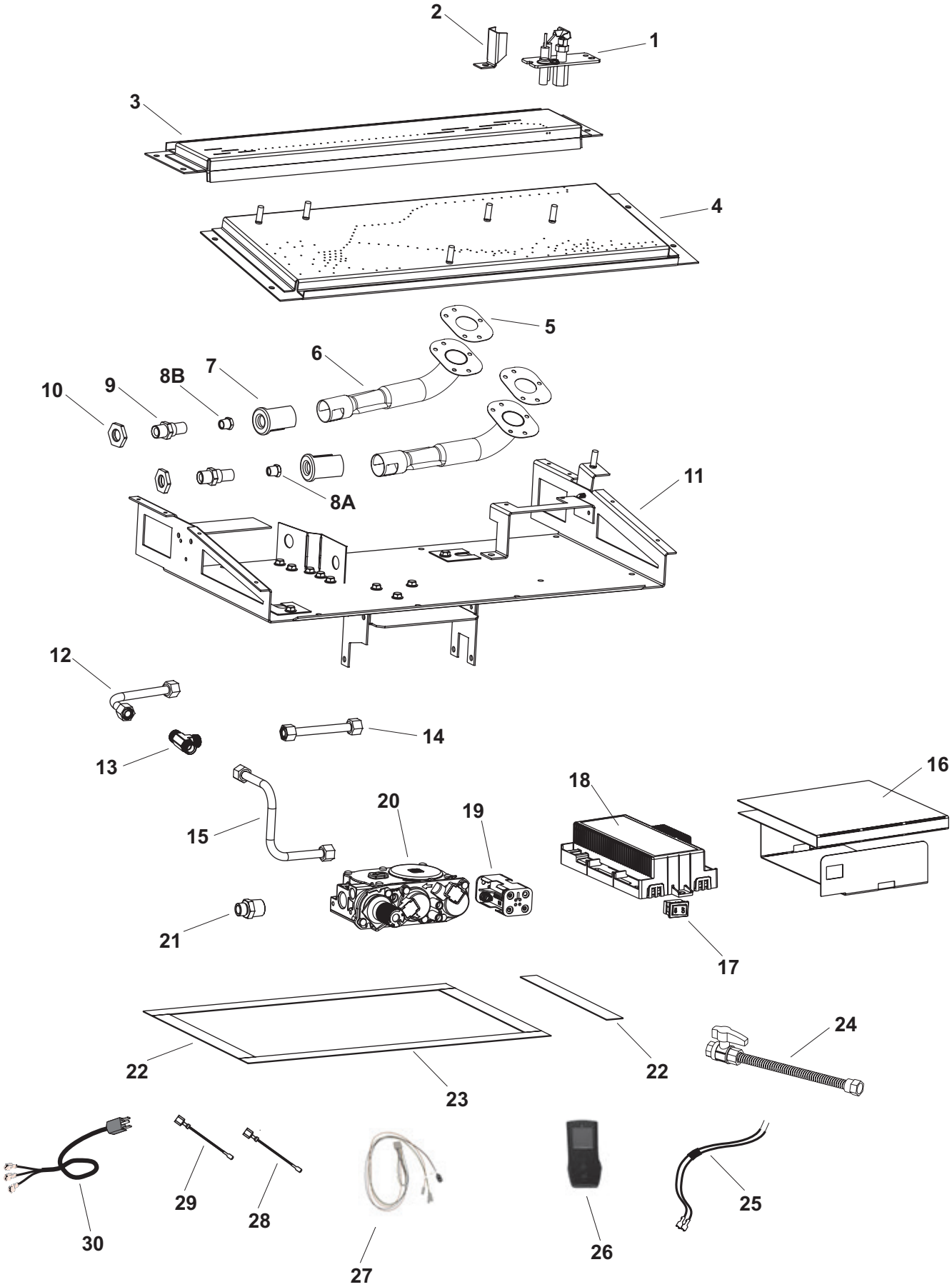

INTERMITTENT PILOT PARTS LIST

INDEX NO.	PART NUMBER DVCX36	PART NUMBER DVCX42	DESCRIPTION
1	R11585	R11585	PILOT ASSEMBLY, NAT
1	R11586	R11586	PILOT ASSEMBLY, LPG
2	33633	33633	THERMOCOUPLE SHIELD
3	34003	34003	BURNER REAR WELDED ASSEMBLY
4	34004	34004	BURNER FRONT WELDED ASSEMBLY
5	R11977	R11977	VENTURI GASKET (QTY. 2)
6	R11978	R11978	VENTURI (QTY. 2)
7	R7624	R7624	AIR SHUTTER (QTY. 2)
8A	P311	N/A	FRONT ORIFICE #47 - NAT
8A	P321	N/A	FRONT ORIFICE #58 - LP
8A	N/A	P252	FRONT ORIFICE #44 - NAT
8A	N/A	P320	FRONT ORIFICE #57 - LP
8B	P286	N/A	REAR ORIFICE #42 - NAT
8B	P208	P208	REAR ORIFICE #1.45mm - LP
8B	N/A	P257	REAR ORIFICE #40 - NAT
9	R11675	R11675	ORIFICE HOLDER (QTY. 2)
10	R7572	R7572	JAMB NUT, 1/4”-18 NPS (QTY. 2)
11	34035	34035	BURNER SUB-ASSEMBLY
12	33003	33003	TUBING ASSEMBLY, INLET - REAR
13	R11862	R11862	CONNECTOR, BRASS COMPRESSION TEE
14	33002	33002	TUBING ASSEMBLY, INLET - FRONT
15	33624	33624	TUBING ASSEMBLY, INLET
16	34107	34107	MODULE TRAY
17	R2522	R2522	SWITCH, ON/OFF
18	R11127	R11127	CONTROL BOARD PROFLAME DFC
19	R11122	R11122	BATTERY HOLDER, AA WITH SNAP-ON
20	R11125	R11125	VALVE, NAT
20	R11126	R11126	VALVE, LPG
21	R2423	R2423	CONNECTOR, MALE 5/16 X 3/8 NPT
22	17626	17626	GASKET, 3/4” X 7” (QTY. 3)
23	17625	17625	GASKET, 3/4” X 13 3/4” (QTY. 2)
24	R10961	R10961	FLEXLINE 3/8 X 18 WITH SHUTOFF
25	R2566	R2566	WIRE ASSEMBLY (QTY. 2)
26	R11128	R11128	POWER ADAPTOR 7.0 VDC
27	R11123	R11123	WIRE HARNESS PROFLAME DFC
28	R11034	R11034	WIRE ASSEMBLY, ORANGE

N/A - Part not applicable for that particular unit.

⚠ WARNING

USE ONLY MANUFACTURER’S REPLACEMENT PARTS. USE OF ANY OTHER PARTS COULD CAUSE INJURY OR DEATH.

FIREPLACE - ALL UNITS PARTS VIEW

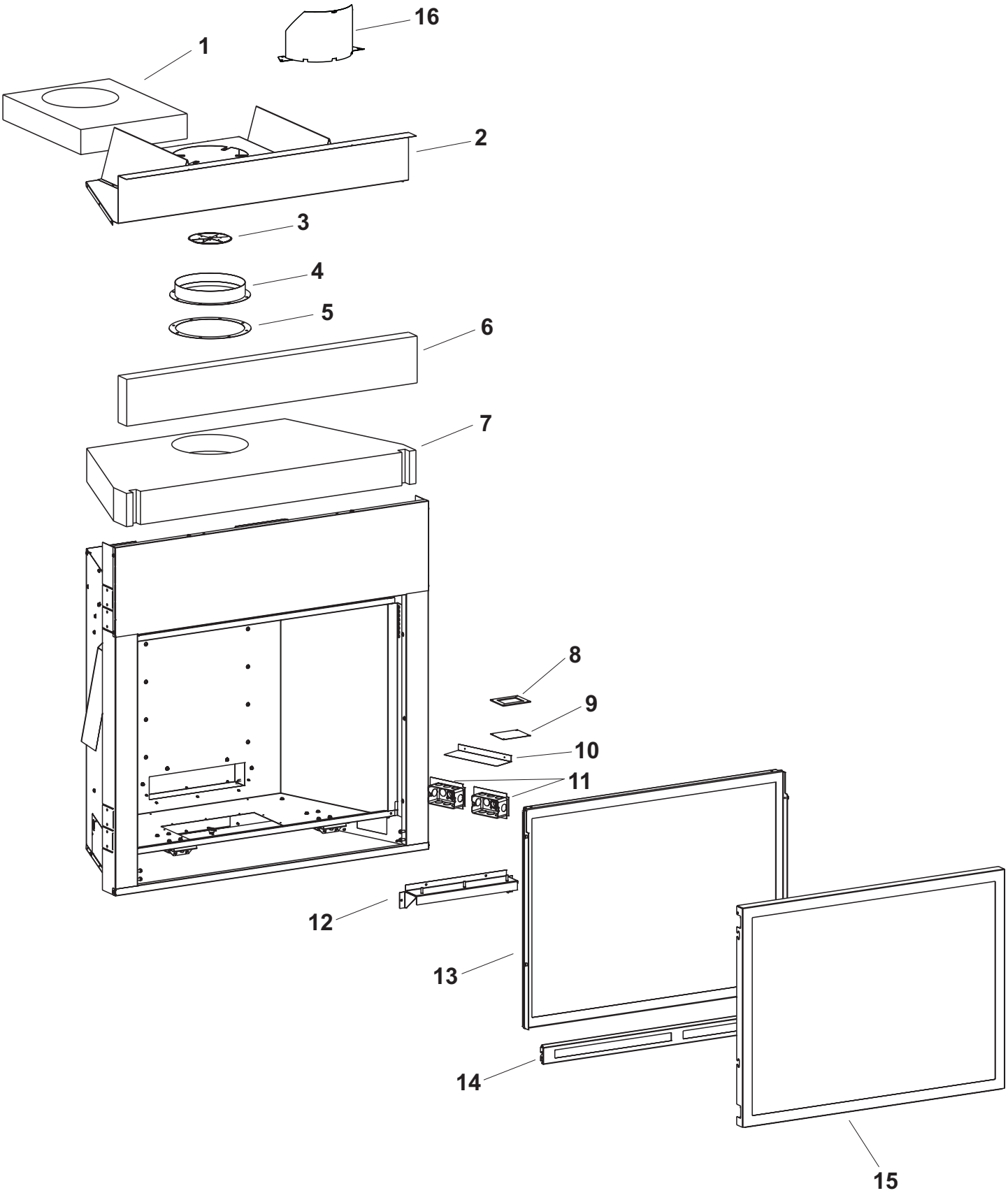

FIREPLACE - ALL UNITS PARTS LIST

INDEX NO.	PART NUMBER DVCX36	PART NUMBER DVCX42	DESCRIPTION
1	R11935	R11935	INSULATION TOP, CENTER
2	34050	34051	OUTER WRAPPER TOP ASSEMBLY
3	34054	34054	FLUE RESTRICTOR ASSEMBLY - NAT
3	34062	34062	FLUE RESTRICTOR ASSEMBLY - LPG
4	R7567	R7567	INLET VENT ADAPTER, 8
5	R7573	R7573	GASKET, INLET VENT
6	R11947	R11948	INSULATION TOP, FACE
7	R11936	R11937	INSULATION TOP
8	R9658	R9658	GASKET, ACCENT LAMP
9	32214	32214	COVER PLATE, ACCENT LIGHT
10	17357	17357	JUNCTION BOX SHIELD
11	17162	17162	JUNCTION BOX ASSEMBLY
12	34053	34053	REAR LOG SUPPORT ASSEMBLY
13	35108	35109	GLASS FRAME ASSEMBLY COMPLETE
14	32960	32994	LOWER PANEL
15	34987	34988	SCREEN ASSEMBLY COMPLETE
16	25520	25520	HEATH SHIELD, FLUE
N/S	R3492	R3492	RECEPTICAL, 3-PRONG
N/S	R3491	R3491	COVER, JUNCTION BOX

N/S - Part not shown on the Parts View.

⚠ WARNING

USE ONLY MANUFACTURER'S REPLACEMENT PARTS. USE OF ANY OTHER PARTS COULD CAUSE INJURY OR DEATH.

MAINTENANCE AND SERVICE

NOTE

It is normal for steel appliances to make expansion and/or contraction noise during the start-up or cool-down cycle. Similar noises are found with your furnace heat exchanger or car engine.
It is normal for your gas fireplace to give off some odor the first time it is burned. This is due to the curing of the paint and any oil from the manufacturing process.
If odor becomes offensive, open windows.

Burn the fireplace for at least six hours the first time you use it. If optional fan kit has been installed, place fan in the "OFF" position during this time.

IMPORTANT: Turn off gas before servicing appliance. Have a qualified service person perform these check-ups at the beginning of each heating season.

- **Clean Burner and Control Compartment**
  Keep the control compartment, logs, and burner areas surrounding the logs clean by vacuuming or brushing at least twice a year.

Cleaning Procedure

1. Turn off pilot light at gas valve.
2. Remove glass front. (See Glass Removal)
3. Vacuum burner compartment.
4. Reinstall glass front.
5. Ignite pilot. (See Lighting Instructions)
6. Operate the pilot burner. If it appears abnormal call a service person.

- **Check Vent System**
  Inspect the appliance and venting system before initial use and at least annually. Inspect the external vent cap on a regular basis to make sure no debris is interferes with the air flow.

Glass Cleaning

Clean the glass periodically. During start-up, condensation forms on the inside of the glass causing lint, dust and other airborne particles to cling to the glass. Also initial paint curing may deposit a film on the glass. Allow the fireplace to cool and then clean the glass two or three times with a non-abrasive household cleaner and warm water. We recommend gas fireplace glass cleaner. After that, clean the glass two or three times during each heating season or more often if necessary.

Wiring

If any of the original wire supplied with this unit must be replaced, use no. 18, 150°C wire or its equivalent.

General Glass Information

⚠ WARNING

Do not operate appliance with the glass front removed, cracked or broken.

Only glass approved for use by the manufacturer in fireplace may be used for replacement. The glass replacement should be done by a licensed or qualified service person.

⚠ WARNING

1. The use of substitute glass will void all product warranties.
2. Avoid breaking the glass.
3. Do not operate this appliance without the glass front or with a broken glass front. Have a qualified service person replace damaged glass and gasket using materials specified by Empire Comfort Systems.
4. Do not abuse strike the glass.

⚠ WARNING

Do not use Ammonia based or abrasive cleaners on glass.
Do not attempt to clean glass when glass is hot.

Glass & Barrier Removal

1. Remove the lower panel.
2. Lift off and remove the barrier screen.
3. Release two glass frame clamps at bottom of firebox.
4. Remove glass frame.

Glass & Barrier Replacement

1. Place the glass frame into fireplace.
2. Attach two glass frame clamps at bottom of firebox.
3. Replace the barrier screen.
4. Attach lower panel.

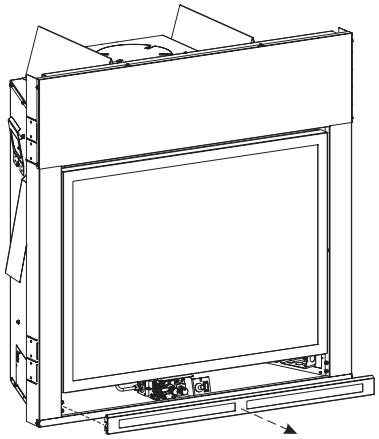

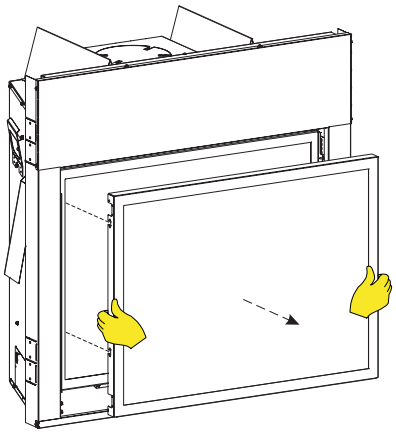

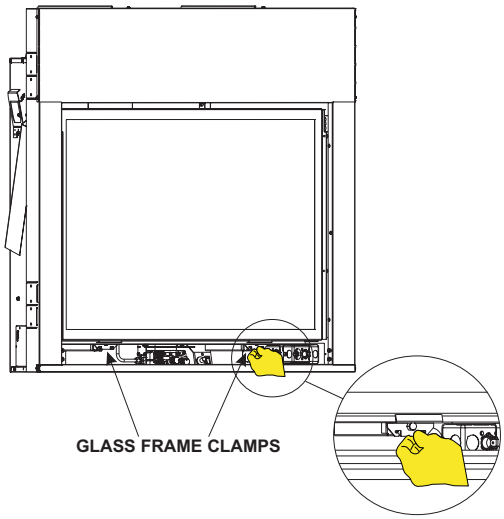

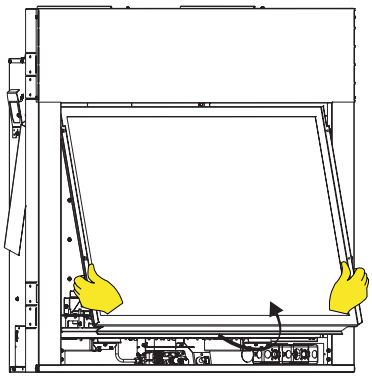

IMPORTANT SAFETY INFORMATION

Definitions:

⚠ **DANGER**: Indicates a hazardous situation which, if not avoided, will result in death or serious injury.

⚠ **WARNING**: Indicates a hazardous situation which, if not avoided, could result in death or serious injury.

⚠ **CAUTION**: Indicates a hazardous situation which, if not avoided, could result in minor or moderate injury.

NOTICE: Addresses practices not related to personal injury.

⚠ WARNING

Read and follow these safety precautions prior to operating this appliance. Failure to follow these precautions may result in death, injury, or property damage.

Safety Precautions

Before enclosing the vent pipe assembly, operate the appliance to ensure it vents properly.

⚠ WARNING

Do not operate this appliance without the glass front panel installed. Improper use of the appliance will cause noxious fumes to enter the building.

⚠ CAUTION

If the glass is cracked or damaged in any way, it should be replaced only with a complete glass frame assembly from Empire. See parts list on Pages 60 - 61 for ordering.

- Due to high temperatures, the appliance should be located out of traffic and away from furniture and draperies.
- If this appliance is installed directly on carpeting, tile or other combustible material other than wood flooring the appliance must be installed on a metal or wood panel extending the full width and depth of the appliance.
  The base referred to above does not mean the fireproof base as used on wood stoves. The protection is for rugs that are extremely thick and light colored tile.
- Alert people – and especially children – to the hazards of high surface temperatures. This heater may become hot enough to burn skin and ignite clothing after prolonged contact. To prevent injury, caution people to stay clear and avoid touching the heater.
- Young children should be carefully supervised when they are in the same room as the appliance.
- Always keep the appliance area clear and free from combustible material, gasoline and other flammable vapors and liquids.
- This appliance must not share or be connected to a flue serving a separate solid-fuel burning appliance.
- The vent cap, located on the outside of your home, will become very hot. Alert everyone, adults and children, to stay clear and avoid touching the vent cap. Keep the area around the vent cap clear of combustibles, including shrubs and trees.
- Under no circumstances should any solid fuels (wood, coal, paper or cardboard etc.) be used in this appliance.
- This appliance requires an unimpeded flow of air to circulate warm air. Do not place objects on or around the appliance that may restrict air flow to or from the appliance.
- Due to high temperatures, the appliance should be located out of traffic and away from furniture and draperies.
- Keep the area around the heater free of combustible materials – including drapery, upholstered furniture, paper, boxes, and clothing.
- The glass front or any part removed for servicing the appliance must be replaced prior to operating the appliance. Work should be done by a qualified service person.
- Any safety screen or guard removed to service an appliance must be replaced prior to operating the appliance.
- Young children should be carefully supervised when they are in the same room as the appliance. Toddlers, young children, and others may be susceptible to accidental contact burns. A physical barrier is recommended if there are at-risk individuals in the house. To restrict access to a fireplace or stove, install an adjustable safety gate to keep toddlers young children, and other at-risk individuals out of the room and away from hot surfaces.
- A barrier designed to reduce the risk of burns from the hot viewing glass is provided with this appliance and shall be installed for the protection of children and other at-risk individuals.
- If the barrier becomes damaged, the barrier shall be replaced with the manufacturer's barrier for this appliance.
- Any safety screen, guard, or barrier removed for servicing an appliance must be replaced prior to operating the appliance.

Maintenance Precautions

- Installation and repair should be done by a qualified service person. The appliance should be inspected before use and at least annually by a qualified service person. More frequent cleaning may be required due to excessive lint from carpeting, bedding material, etc. It is imperative that control compartments, burners and circulating air passageways of the appliance be kept clean.
- Keep burner and control compartment clean.
- Examine venting system periodically and replace damaged parts.
- Make a periodic visual check of pilot and burners. Clean and replace damaged parts.

Damaged Heater

- Do not use this appliance if any part has been under water. Immediately call a qualified service technician to inspect the appliance and to replace any part of the control system and any gas control which has been under water.
- In the event of a natural disaster (tornado, earthquake, fire, etc.) have a qualified technician inspect the heater for damage or potential gas leaks. Repair or replace any damaged components before operating this heater.

SAFETY INFORMATION FOR USERS OF LP GAS

Propane (LP-Gas) is a flammable gas which can cause fires and explosions. In its natural state, propane is odorless and colorless. You may not know all the following safety precautions which can protect both you and your family from an accident. Read them carefully now, then review them point by point with the members of your household. Someday when there may not be a minute to lose, everyone's safety will depend on knowing exactly what to do. If, after reading the following information, you feel you still need more information, please contact your gas supplier.

LP-GAS WARNING ODOR

If a gas leak happens, you should be able to smell the gas because of the odorant put in the LP-Gas. That's your signal to go into immediate action!

- Do not operate electric switches, light matches, use your phone. Do not do anything that could ignite the gas.
- Get everyone out of the building, vehicle, trailer, or area. Do that IMMEDIATELY.
- Close all gas tank or cylinder supply valves.
- LP-Gas is heavier than air and may settle in low areas such as basements. When you have reason to suspect a gas leak, keep out of basements and other low areas. Stay out until firefighters declare them to be safe.
- Use your neighbor's phone and call a trained LP-Gas service person and the fire department. Even though you may not continue to smell gas, do not turn on the gas again. Do not re-enter the building, vehicle, trailer, or area.
- **Finally,** let the service man and firefighters check for escaped gas. Have them air out the area before you return. Properly trained LP-Gas service people should repair the leak, then check and relight the gas appliance for you.

NO ODOR DETECTED - ODOR FADE

Some people cannot smell well. Some people cannot smell the odor of the chemical put into the gas. You must find out if you can smell the odorant in propane. Smoking can decrease your ability to smell. Being around an odor for a time can affect your sensitivity or ability to detect that odor. Sometimes other odors in the area mask the gas odor. People may not smell the gas odor or their minds are on something else. Thinking about smelling a gas odor can make it easier to smell.

The odorant in LP-Gas is colorless, and it can fade under some circumstances. For example, if there is an underground leak, the movement of the gas through soil can filter the odorant. Odorants in LP-Gas also are subject to oxidation. This fading can occur if there is rust inside the storage tank or in iron gas pipes.

The odorant in escaped gas can adsorb or absorb onto or into walls, masonry and other materials and fabrics in a room. That will take some of the odorant out of the gas, reducing its odor intensity.

LP-Gas may stratify in a closed area, and the odor intensity could vary at different levels. Since it is heavier than air, there may be more odor at lower levels. Always be sensitive to the slightest gas odor. If you detect any odor, treat it as a serious leak. Immediately go into action as instructed earlier.

SOME POINTS TO REMEMBER

- **Learn to recognize the odor of LP-Gas.** Your local LP-Gas Dealer can give you a "Scratch and Sniff" pamphlet. Use it to find out what the propane odor smells like. If you suspect that your LP-Gas has a weak or abnormal odor, call your LP-Gas Dealer.
- If you are not qualified, do not light pilot lights, perform service, or make adjustments to appliances on the LP-Gas system. If you are qualified, consciously think about the odor of LP-Gas prior to and while lighting pilot lights or performing service or making adjustments.
- Sometimes a basement or a closed-up house has a musty smell that can cover up the LP-Gas odor. Do not try to light pilot lights, perform service, or make adjustments in an area where the conditions are such that you may not detect the odor if there has been a leak of LP-Gas.
- Odor fade, due to oxidation by rust or adsorption on walls of new cylinders and tanks, is possible. Therefore, people should be particularly alert and careful when new tanks or cylinders are placed in service. Odor fade can occur in new tanks, or reinstalled old tanks, if they are filled and allowed to set too long before refilling. Cylinders and tanks which have been out of service for a time may develop internal rust which will cause odor fade. If such conditions are suspected to exist, a periodic sniff test of the gas is advisable. **If you have any question about the gas odor, call your LP-Gas dealer. A periodic sniff test of the LP-Gas is a good safety measure under any condition.**
- If, at any time, you do not smell the LP-Gas odorant and you think you should, assume you have a leak. Then take the same immediate action recommended above for the occasion when you do detect the odorized LP-Gas.
- If you experience a complete "gas out," (the container is under no vapor pressure), turn the tank valve off immediately. If the container valve is left on, the container may draw in some air through openings such as pilot light orifices. If this occurs, some new internal rusting could occur. If the valve is left open, then treat the container as a new tank. Always be sure your container is under vapor pressure by turning it off at the container before it goes completely empty or having it refilled before it is completely empty.

REQUIREMENTS FOR MASSACHUSETTS

For all side wall horizontally vented gas fueled equipment installed in every dwelling, building or structure used in whole or in part for residential purposes, including those owned or operated by the Commonwealth and where the side wall exhaust vent termination is less than seven feet above finished grade in the area of the venting, including but not limited to decks and porches, the following requirements shall be satisfied:

1. INSTALLATION OF CARBON MONOXIDE DETECTORS. At the time of installation of the side wall horizontal vented gas fueled equipment, the installing plumber or gasfitter shall observe that a hard wired carbon monoxide detector with an alarm and battery back-up is installed on the floor level where the gas equipment is to be installed. In addition, the installing plumber or gasfitter shall observe that a battery operated or hard wired carbon monoxide detector with an alarm is installed on each additional level of the dwelling, building or structure served by the side wall horizontal vented gas fueled equipment. It shall be the responsibility of the property owner to secure the services of qualified licensed professionals for the installation of hard wired carbon monoxide detectors
   a. In the event that the side wall horizontally vented gas fueled equipment is installed in a crawl space or an attic, the hard wired carbon monoxide detector with alarm and battery back-up may be installed on the next adjacent floor level.
   b. In the event that the requirements of this subdivision can not be met at the time of completion of installation, the owner shall have a period of thirty days to comply with the above requirements; provided, however, that during said thirty day period, a battery operated carbon monoxide detector with an alarm shall be installed.

2. APPROVED CARBON MONOXIDE DETECTORS. Each carbon monoxide detector as required in accordance with the above provisions shall comply with NFPA 720 and be ANSI/UL 2034 listed and IAS certified.

3. SIGNAGE. A metal or plastic identification plate shall be permanently mounted to the exterior of the building at a minimum height of eight feet above grade directly in line with the exhaust vent termination for the horizontally vented gas fueled heating appliance or equipment. The sign shall read, in print size no less than 1/2 inch in size, **"GAS VENT DIRECTLY BELOW. KEEP CLEAR OF ALL OBSTRUCTIONS".**

4. INSPECTION. The state or local gas inspector of the side wall horizontally vented gas fueled equipment shall not approve the installation unless, upon inspection, the inspector observes carbon monoxide detectors and signage installed in accordance with the provisions of 248 CMR 5.08(2)(a) 1 through 4.
   (b) EXEMPTIONS: The following equipment is exempt from 248 CMR 5.08(2)(a)1 through 4:
      1. The equipment listed in Chapter 10 entitled "Equipment Not Required To Be Vented" in the most current edition of NFPA 54 as adopted by the Board; and
      2. Product Approved side wall horizontally vented gas fueled equipment installed in a room or structure separate from the dwelling, building or structure used in whole or in part for residential purposes.
   (d) MANUFACTURER REQUIREMENTS - GAS EQUIPMENT VENTING SYSTEM NOT PROVIDED. When the manufacturer of a Product Approved side wall horizontally vented gas fueled equipment does not provide the parts for venting the flue gases, but identifies "special venting systems", the following requirements shall be satisfied by the manufacturer:
      1. The referenced "special venting system" instructions shall be included with the appliance or equipment installation instructions; and
      2. The "special venting systems" shall be Product Approved by the Board, and the instructions for that system shall include a parts list and detailed installation instruction.
   (e) A copy of all installation instructions for all Product Approved side wall horizontally vented gas fueled equipment, all venting instructions, all parts lists for venting instructions, and/or all venting design instructions shall remain with the appliance or equipment at the completion of the installation.

MASTER PARTS DISTRIBUTOR LIST

To Order Parts Under Warranty, please contact your local Empire dealer. See the dealer locator at www.empirecomfort.com. To provide warranty service, your dealer will need your name and address, purchase date and serial number, and the nature of the problem with the unit.

To Order Parts After the Warranty Period, please contact your dealer or one of the Master Parts Distributors listed below. This list changes from time to time. For the current list, please click on the Master Parts button at www.empirecomfort.com. Please note: Master Parts Distributors are independent businesses that stock the most commonly ordered Original Equipment repair parts for Heaters, Grills, and Fireplaces manufactured by Empire Comfort Systems Inc.

Dey Distributing
1401 Willow Lake Boulevard
Vadnais Heights, MN 55101

Phone: 651-490-9191
Toll Free: 800-397-1339
Website: www.deydistributing.com
Parts: Heater, Hearth and Grills

Victor Division of F. W. Webb Company
200 Locust Street
Hartford, CT 06114

Phone: 860-722-2433
Toll Free: 800-243-9360
Fax: 860-293-0479
Toll Free Fax: 800-274-2004
Websites: www.fwwebb.com & www.victormfg.com
Parts: Heater, Hearth and Grills

East Coast Energy Products
10 East Route 36
West Long Branch, NJ 07764

Phone: 732-870-8809
Toll Free: 800-755-8809
Fax: 732-870-8811
Website: www.eastcoastenergy.com
Parts: Heater, Hearth and Grills

HOW TO ORDER REPAIR PARTS

Parts Not Under Warranty

Parts can be ordered through your Service Person, Dealer, or a Master Parts Distributor. See this page for the Master Parts Distributors list. For best results, the **service person or dealer** should order parts through the distributor. Parts can be shipped directly to the **service person/dealer**.

Warranty Parts

Warranty parts will need a proof of purchase and can be ordered by your Service Person or Dealer. Proof of purchase is **required** for warranty parts.

All parts listed in the Parts List have a Part Number. When ordering parts, first obtain the Model Number and Serial Number from the name plate on your equipment. Then determine the Part Number (**not** the Index Number) and the Description of each part from the following illustration and part list. Be sure to give all this information . . .

Appliance Model Number _____ Part Description _____

Appliance Serial Number _____ Part Number _____

Type of Gas (Propane or Natural) _____

Do not order bolts, screws, washers or nuts. They are standard hardware items and can be purchased at any local hardware store.

Shipments contingent upon strikes, fires and all causes beyond our control.

WARRANTY

Empire Comfort Systems Inc. warranties this hearth product to be free from defects at the time of purchase and for the periods specified below. Hearth products must be installed by a qualified technician and must be maintained and operated safely, in accordance with the instructions in the owner's manual. This warranty applies to the original purchaser only and is not transferable. All warranty repairs must be accomplished by a qualified gas appliance technician.

Limited Lifetime Parts Warranty – Combustion Chamber, Heat Exchanger, and Factory-Installed Glass

If the combustion chamber, heat exchanger (see parts list) or factory-installed glass fails because of defective workmanship or material, Empire will repair or replace at Empire's option.

Limited Three-Year Parts Warranty – All Other Components

(Except Remote Controls, Thermostats, Accessories and Replacement Parts)

Should any part fail because of defective workmanship or material within three years from the date of purchase, Empire will repair or replace at Empire's option..

Limited One-Year Parts Warranty – Remote Controls, Thermostats, Accessories, and Parts

Should any remote control, thermostat, accessory, or other part fail because of defective workmanship within one year from the date of purchase, Empire will repair or replace at Empire's option.

Duties of the Owner

The appliance must be installed by a qualified installer and operated in accordance with the instructions furnished with the appliance. A bill of sale, cancelled check, or payment record should be kept to verify purchase date and establish warranty period. Ready access to the appliance for service.

What Is Not Covered

Damages that might result from the use, misuse, or improper installation of this appliance.
Travel, diagnostic costs and freight charges on warranted parts to and from the factory.
Claims that do not involve defective workmanship or materials.
Unauthorized service or parts replacements.
Removal and reinstallation cost.
Inoperable due to improper or lack of maintenance.

How To Get Service

To make a claim under this warranty, please have your receipt available and contact your installing dealer. Provide the dealer with the model number, serial number, type of gas, and purchase verification. The installing dealer is responsible for providing service and will contact the factory to initiate any warranted parts replacements. Empire will make replacement parts available at the factory. Shipping expenses are not covered.

If, after contacting your Empire dealer, service received has not been satisfactory, contact: Consumer Relations Department, Empire Comfort Systems Inc., PO Box 529, Belleville, Illinois 62222, or send an e-mail to info@empirecomfort.com with "Consumer Relations" in the subject line.

Your Rights Under State Law

This warranty gives you specific legal rights, and you may also have other rights, which vary from state to state.

EMPIRE
COMFORT SYSTEMS

Empire Comfort Systems Inc.
Belleville, IL

If you have a general question about our products, please e-mail us at info@empirecomfort.com.

If you have a service or repair question, please contact your dealer.

www.empirecomfort.com