This Owner's Manual is provided and hosted by Appliance Factory Parts.

Appliance Factory Parts
Experts in BBQ, Humidifier, & Appliance Parts
1-800-955-7075

White Mountain Hearth AVM21MTEKN-1 Owner's Manual

Shop genuine replacement parts for White Mountain Hearth AVM21MTEKN-1

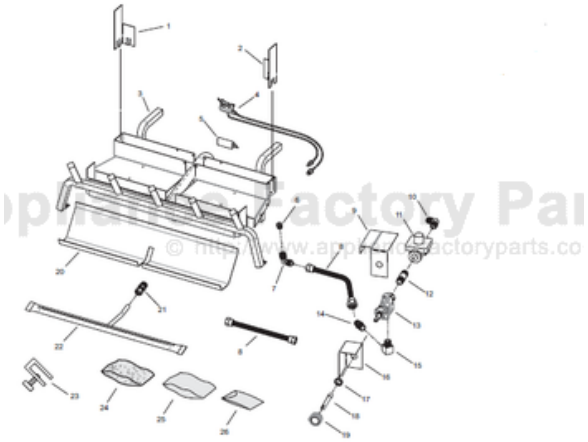

Find Your White Mountain Hearth Fireplace Parts - Select From 539 Models

-------- Manual continues below --------

EMPIRE
COMFORT SYSTEMS
SINCE 1932

INSTALLATION INSTRUCTIONS AND OWNER'S MANUAL

GAS-FIRED
C UL US
LISTED

Installer: Leave this manual with the appliance.
Consumer: Retain this manual for future reference.

IMPORTANT! Read these instructions carefully before installing or operating this gas appliance. These instructions should be left with the homeowner for future reference.

⚠ WARNING

If the information in this manual is not followed exactly, a fire or explosion may result causing property damage, personal injury or loss of life.

- **Do not store or use gasoline or other flammable vapors and liquids in the vicinity of this or any other appliance.**
- **WHAT TO DO IF YOU SMELL GAS**
  - **Do not try to light any appliance.**
  - **Do not touch any electrical switch; do not use any phone in your building.**
  - **Immediately call your gas supplier from a neighbor's phone. Follow the gas supplier's instructions.**
  - **If you cannot reach your gas supplier, call the fire department.**
- **Installation and service must be performed by a qualified installer, service agency or the gas supplier.**

⚠ DANGER

If not installed, operated and maintained in accordance with the manufacturer's instructions, this product could expose you to substances in fuel or from fuel combustion which can cause death or serious illness.

CONGRATULATIONS on the purchase of your new TRIPLE GAS BURNER! Your Decorative Gas Burner is designed and intended for installation in an approved, existing, fully vented, wood-burning fireplace, with a gas hook-up.

TRIPLE BURNER

(REQUIRES VENTED DECORATIVE LOG SET)
FOR INSTALLATION IN SOLID-FUEL BURNING FIREPLACES

MANUAL MODELS
AVM(21,24,30)MTEKN-1

MILLIVOLT MODELS
AVR(21,24,30)MTEKN-1

This appliance must be installed only in a solid-fuel burning fireplace with a working flue and construction of noncombustible materials.

This unit is NOT for use with solid fuel. Solid fuels shall NOT be burned in a fireplace where a decorative appliance is installed.

The vent damper must have a damper clamp attached to it to keep the damper from accidentally closing during operation.

TABLE OF CONTENTS

SECTION	PAGE
Before You Start	3
Carton Contents & Hardware Pack	4
Important Safety Information	5 - 6
Safety Information for Users of LP-Gas	7
General Information	8
Product Specifications	8
Fireplace Preparation	9
Introduction	9
Gas Supply	10 - 11
Assembly	12 - 13
Before Fully Installing the Appliance	13
Installation	14 - 15
Door Operation	16
Millivolt Lighting Instructions	17
Manual Lighting Instructions	18
Pilot and Main Burner Flame Characteristics	19
Wiring	20
Maintenance & Service	21
Troubleshooting	22
AVM Parts List & Exploded View	23
AVR Parts List & Exploded View	24
Master Parts Distributor List	25
How To Order Repair Parts	25
Appliance Service History	26
Warranty	27

BEFORE YOU START

Samples and Definitions:

⚠ DANGER
Indicates a hazardous situation which, if not avoided, will result in death or serious injury.

⚠ WARNING
Indicates a hazardous situation which, if not avoided, could result in death or serious injury.

⚠ CAUTION
Indicates a hazardous situation which, if not avoided, could result in minor or moderate injury.

NOTICE: Addresses practices not related to personal injury.

1. Read the safety information on pages 5 - 7.
2. Review gas line information on pages 10 - 11.
3. Review the wiring information on page 20.
4. Light the fireplace and troubleshoot. See pages 17, 18 & 22.
5. Show the homeowner how to operate the fireplace.
6. Show the homeowner how to do the basic maintenance.

These instructions are intended as a general guide and do not supersede national or local codes in any way. Authorities having jurisdiction should be consulted before installation.

- Follow all local codes regarding installation, combustion and ventilation air or in the absence of local codes follow the National Fuel Gas Code ANSI Z223.1(U.S. installation), or CAN/CGA-B149, Installation Code (Canada installation) and with ANSI Z21.60 Decorative Vented Appliances for Solid Fuel Burning Fireplaces.
- Installation and provision for combustion and ventilation air must conform to the *National Fuel Gas Code, ANSI Z223.1,* or C*AN/CGA-B149.1, Natural Gas Installation Code*, or *CAN/CGA-B149.2, Propane Installation Code.*
- The installation of appliances designed for manufactured home (U.S. only) or mobile home installation must conform with the *Standard for Mobile House, CAN/CSA Z240 MH*, in Canada, or with the *Manufactured Home Constructions and Safety Standard, Title 24 CFR, Part 3280*, in the United States, or when such a standard is not applicable, *Manufactured Home Installations Standard, ANSI/NCSBCS A225.1/NFPA 501A.*

CARTON CONTENTS & HARDWARE PACK

HARDWARE PACK CONTENTS

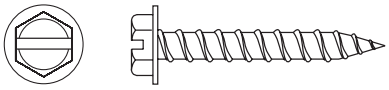

1/4” X 1 1/4” SLOTTED HEX HEAD ANCHOR SCREW (2)

CARTON CONTENTS

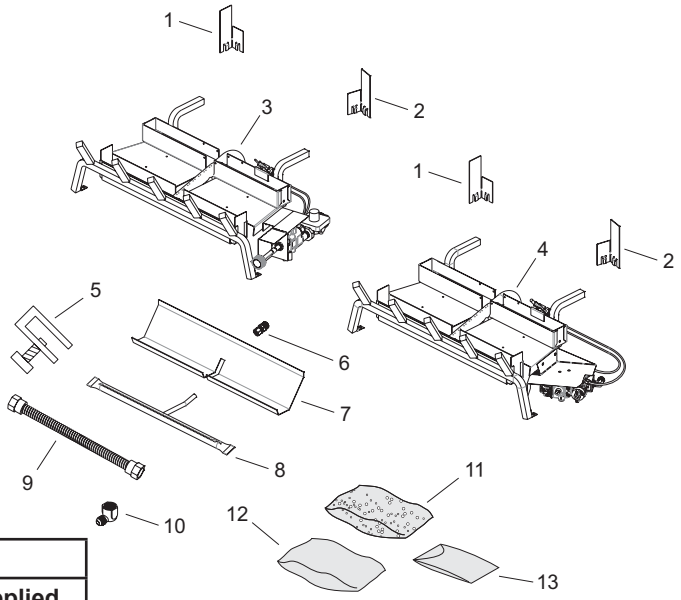

Items not shown to scale.

AVM(21,24,30)MTEKN-1			
Index No.	Description	Quantity Supplied	
		AVM(21,24)	AVM30
1	Clip - Left	1	1
2	Clip - Right	1	1
3	Triple Burner Assembly with Manual Valve	1	1
5	Damper Clamp	1	1
6	Compression Fitting	1	1
7	Ember Burner Pan	1	1
8	Ember Burner	1	1
9	Flexline	1	1
10	Street Elbow, 1/2 X 3/8	1	1
11	Rockwool Mix	2	2
12	Lava Rock	3	3
13	Crushed Glass	1	2

AVR(21,24,30)MTEKN-1			
Index No.	Description	Quantity Supplied	
		AVR(21,24)	AVR30
1	Clip - Left	1	1
2	Clip - Right	1	1
4	Triple Burner Assembly with Millivolt Valve	1	1
5	Damper Clamp	1	1
6	Compression Fitting	1	1
7	Ember Burner Pan	1	1
8	Ember Burner	1	1
9	Flexline	1	1
10	Street Elbow, 1/2 X 3/8	1	1
11	Rockwool Mix	2	2
12	Lava Rock	3	3
13	Crushed Glass	1	2
N/S	Log Switch	1	1

See Parts Lists on pages 23 & 24 for ordering replacement parts. Do not order batteries, bolts, screws, washers or nuts. They are standard hardware items and can be purchased at any local hardware store.

IMPORTANT SAFETY INFORMATION

Installer: Leave these instructions with the owner for future reference.
For Installation In Solid Fuel Burning Fireplaces. Do not burn wood or solid fuels in a fireplace where a decorative gas log set is installed. This appliance is for installation only in a solid fuel burning fireplace, masonry fireplace or manufactured fireplace.

⚠ WARNING

Before installing in a solid fuel burning fireplace, the chimney flue and firebox must be cleaned of soot, creosote, ashes and loose paint by a qualified chimney cleaner.

⚠ WARNING

Do not allow fans to blow directly into or at the fireplace. Avoid any drafts that alter burner flame patterns.

⚠ WARNING

Do not use a blower insert, heat exchanger insert or other accessory not approved for use with this appliance.

⚠ DANGER

Any modification to this gas log set or to controls can be dangerous. Improper installation or use of the gas log set can cause serious injury or death from fire, burns, explosion or carbon monoxide poisoning.

⚠ WARNING

Do not operate this burner with glass doors closed.

- Installation and repair must be done by a QUALIFIED SERVICE PERSON. The appliance should be inspected before use and at least annually by a qualified service person. More frequent cleaning may be required due to excessive lint from carpeting, bedding materials, etc. It is imperative that control compartments, burners and circulating air passageways of the appliance be kept clean.
- Dot not place clothing or other flammable material on or near the appliance.
- Do not place trash or other articles on the log set during operation.
- Do not put anything around the fireplace that will obstruct the flow of ventilation air.
- Do not use this appliance if any part has been under water. Immediately call a qualified service technician to inspect the appliance and to replace any part of the control system and any gas control which has been under water.
- Do not use thermostats on vented burner applications
- Keep the appliance area clear and free from combustible material, gasoline and other flammable vapors and liquids.
- Keep burner and control compartment clean.
- A yearly examination and cleaning of the venting system of the solid-fuel burning fireplace must be performed by a qualified agency.
- Make a periodic visual check of pilot and burners. Clean and replace damaged parts.
- Alert children and adults to the hazards of high surface temperatures and caution them to stay away to avoid burns or clothing ignition.
- Carefully supervise young children when they are in the same room as the appliance.
- During manufacture, this fireplace is treated with certain oils, films and bonding agents. These bonding agents are not harmful but may produce smoke and odors as they are burned off during initial operation of the fireplace. This is normal. Open a window during the initial bake out period.
- Proper installation, burner pan location and log placement is important to achieve optimum look and performance of your gas log set. The logs have been designed for easy location and placement on the grate and must be followed for proper operation.
- Do not operate this log set with glass doors in the closed position. A fireplace screen must be in place when the log set is burning. Adequate combustion air must be provided for proper venting. All flames should go up and out the top of the firebox into the flue vent. If any flames float or curl forward into the room do not operate appliance. Check for an open flue and adequate combustion air into the room. A damper clamp must be installed on the firebox damper to maintain an open flue vent condition. See page 9.
- Young children must be carefully supervised when they are in the same room as the gas log while in operation. Do not place stockings, clothing or any flammable material above or near the fireplace.
- Do not substitute or use materials other than those supplied for use with the log set.

⚠ WARNING

Follow all gas leak check procedures in this manual, prior to operation.

⚠ WARNING

Fuels used in gas or oil-fired appliances, and the products of combustion of such fuels, contain chemicals known to the State of California to cause cancer, birth defects, and/or other reproductive harm. This warning is issued pursuant to California Health & Safety Code Sec. 25249.6.

DO NOT ATTEMPT TO DISCONNECT THE GAS OR ANY GAS FITTING WHILE THIS APPLIANCE IS IN OPERATION.

NEVER leave the decorative gas log set unattended while in operation.

NEVER allow children to operate this decorative gas log set.

NEVER place hands or fingers on the front-edge of this decorative gas log set.

NEVER use liquid propane gas in a natural gas unit, or natural gas in a liquid propane unit.

DO NOT use solid-fuel or lighter fluid in any decorative gas log set.

Any safety screen or guard removed for servicing an appliance must be replaced prior to operating the appliance.

IMPORTANT SAFETY INFORMATION

During manufacturing, fabrication, and shipping, various components of this appliance are treated with certain oils, films, or bonding agents. These chemicals ARE NOT harmful, but may produce annoying smoke and smells, as they are burned off, during the initial operation of the appliance. This may possibly cause headaches, and eye or lung irritation. This is a normal and temporary occurrence. The initial break-in period should last three to four hours. During this period, provide maximum ventilation by opening a window or door, to allow odors to dissipate. Any odor remaining after this initial break-in period, will be slight and will disappear with continued use.

NEVER PLACE ANY COMBUSTIBLE MATERIAL WITHIN TWENTY-FOUR (24) INCHES FROM THE FRONT OF THE FIREPLACE ENCLOSURE.

⚠ WARNING

Do not use this appliance if any part has been under water. Immediately call a qualified service technician to inspect the appliance and replace any part of the control system and any gas control that has been under water.

All units with gas control valves must be lit by a Safety Pilot. For standard units, the pilot is located at the right, rear, center of the unit.
Follow these instructions exactly when lighting the appliance.
BEFORE LIGHTING, smell around the appliance area for gas. Be sure to smell next to the floor, as L.P. gas is heavier than air and will settle to the floor. Use only your hand to rotate the gas control knob. Never use tools. If the knob will not turn by hand, do not try to repair it; call a qualified service technician or installer. Force or attempted repair may result in a fire or explosion.

⚠ WARNING

All gas burning appliances produce smoke and carbon monoxide gas during operation. These fumes can be harmful if the appliance is used in any other than a fully vented fireplace.

⚠ WARNING

The State of Massachusetts requires that the chimney flue damper, when used with decorative gas log sets, be welded open or completely removed. In the Commonwealth of Massachusetts, this appliance must be installed by a licensed plumber or gasfitter.

⚠ WARNING

Improper installation, adjustment, alteration, service or maintenance, can cause property damage, personal injury or loss of life. Refer to the owner's information manual, provided with this appliance. Installation and service must be performed by a qualified installer, service agency or the gas supplier.

GAS WARNING ODOR
If a gas leak happens, you should be able to smell the gas because of the odorant put in the LP-Gas.
That's your signal to go into immediate action!

- Do not operate electric switches, light matches, use your phone. Do not do anything that could ignite the gas.
- Get everyone out of the building, vehicle, trailer, or area. Do that IMMEDIATELY.
- Close all gas tank or cylinder supply valves.
- LP-Gas is heavier than air and may settle in low areas such as basements. When you have reason to suspect a gas leak, keep out of basements and other low areas. Stay out until firefighters declare them to be safe.
- Use your neighbor's phone and call a trained LP-Gas service person and the fire department. Even though you may not continue to smell gas, do not turn on the gas again. Do not re-enter the building, vehicle, trailer, or area.
- **Finally,** let the service man and firefighters check for escaped gas. Have them air out the area before you return. Properly trained LP-Gas service people should repair the leak, then check and relight the gas appliance for you.

SAFETY INFORMATION FOR USERS OF LP-GAS

Propane (LP-Gas) is a flammable gas which can cause fires and explosions. In its natural state, propane is odorless and colorless. You may not know all the following safety precautions which can protect both you and your family from an accident. Read them carefully now, then review them point by point with the members of your household. Someday when there may not be a minute to lose, everyone's safety will depend on knowing exactly what to do. If, after reading the following information, you feel you still need more information, please contact your gas supplier.

NO ODOR DETECTED - ODOR FADE

Some people cannot smell well. Some people cannot smell the odor of the chemical put into the gas. You must find out if you can smell the odorant in propane. Smoking can decrease your ability to smell. Being around an odor for a time can affect your sensitivity or ability to detect that odor. Sometimes other odors in the area mask the gas odor. People may not smell the gas odor or their minds are on something else. Thinking about smelling a gas odor can make it easier to smell.

The odorant in LP-gas is colorless, and it can fade under some circumstances. For example, if there is an underground leak, the movement of the gas through soil can filter the odorant. Odorants in LP-Gas also are subject to oxidation. This fading can occur if there is rust inside the storage tank or in iron gas pipes.

The odorant in escaped gas can adsorb or absorb onto or into walls, masonry and other materials and fabrics in a room. That will take some of the odorant out of the gas, reducing its odor intensity.

LP-Gas may stratify in a closed area, and the odor intensity could vary at different levels. Since it is heavier than air, there may be more odor at lower levels. Always be sensitive to the slightest gas odor. If you detect any odor, treat it as a serious leak. Immediately go into action as instructed earlier.

SOME POINTS TO REMEMBER

- **Learn to recognize the odor of LP-gas.** Your local LP-Gas Dealer can give you a “Scratch and Sniff” pamphlet. Use it to find out what the propane odor smells like. If you suspect that your LP-Gas has a weak or abnormal odor, call your LP-Gas Dealer.
- If you are not qualified, do not light pilot lights, perform service, or make adjustments to appliances on the LP-Gas system. If you are qualified, consciously think about the odor of LP-Gas prior to and while lighting pilot lights or performing service or making adjustments.
- Sometimes a basement or a closed-up house has a musty smell that can cover up the LP-Gas odor. Do not try to light pilot lights, perform service, or make adjustments in an area where the conditions are such that you may not detect the odor if there has been a leak of LP-Gas.
- Odor fade, due to oxidation by rust or adsorption on walls of new cylinders and tanks, is possible. Therefore, people should be particularly alert and careful when new tanks or cylinders are placed in service. Odor fade can occur in new tanks, or reinstalled old tanks, if they are filled and allowed to set too long before refilling. Cylinders and tanks which have been out of service for a time may develop internal rust which will cause odor fade. If such conditions are suspected to exist, a periodic sniff test of the gas is advisable. **If you have any question about the gas odor, call your LP-GAS dealer. A periodic sniff test of the LP-GAS is a good safety measure under any condition.**
- If, at any time, you do not smell the LP-Gas odorant and you think you should, assume you have a leak. Then take the same immediate action recommended above for the occasion when you do detect the odorized LP-Gas.
- If you experience a complete “gas out,” (the container is under no vapor pressure), turn the tank valve off immediately. If the container valve is left on, the container may draw in some air through openings such as pilot light orifices. If this occurs, some new internal rusting could occur. If the valve is left open, then treat the container as a new tank. Always be sure your container is under vapor pressure by turning it off at the container before it goes completely empty or having it refilled before it is completely empty.

GENERAL INFORMATION

Qualified Installing Agency

Installation and replacement of gas piping, gas utilization equipment or accessories and repair and servicing of equipment shall be performed only by a qualified agency. The term "qualified agency" means any individual, firm, corporation or company which either in person or through a representative is engaged in and is responsible for (a) the installation or replacement of gas piping or (b) the connection, installation, repair or servicing of equipment, who is experienced in such work, familiar with all precautions required and has complied with all the requirements of the authority having jurisdiction.

State of Massachusetts: The installation must be made by a licensed plumber or gas fitter in the Commonwealth of Massachusetts.

The installation and the provisions for combustion and ventilation air must conform with the *National Fuel Gas Code, ANSI Z223.1/* NFPA54* Canadian Installation Code *CAN/CGA B149.*
**Available from the American National Standards Institute, Inc. 11 West 42nd St., New York, N.Y. 10018.*

High Altitude Installation

When installing this unit at an elevation above 2000 feet (in the United States) it may be necessary to decrease the input rating by changing the existing burner orifice to a smaller size. Generally, input should be reduced 4 percent for each 1000 feet above sea level. However, if the heating value of the gas has been reduced, this general rule may not apply. Check with local gas utility for proper orifice size identification.

For Canadian high altitude applications, this appliance is suitable for installation at elevations between 0 feet (0m) and 4,500 (1,370m) without change.

When installing this unit at an elevation above 4500 feet (1,370m) (in Canada), check with local authorities.

Consult your local gas utility for assistance in determining the proper orifice for location.

PRODUCT SPECIFICATIONS

⚠ WARNING

To avoid damage and possible injury, do not use sand in Liquid Propane Hearth Kits. Use the Rockwool mix, provided with the Liquid Propane Change Kit.

		Natural Gas	
		Millivolt	Manual
Regulator pressure setting		4.0”	4.5”
Gas inlet pressure	Max.	10.5”	10.5”
	Min.	5.0”	5.0”

Model	Gas Type	Valve Type	Orifice	Manifold Pressure (w.c.)	BTUH Max. Rate
AVM21	NAT	Manual	19	4.5”	75,000
AVM24	NAT	Manual	19	4.5”	75,000
AVM30	NAT	Manual	12	4.5”	90,000
AVR21	NAT	Millivolt	19	4.0”	75,000
AVR24	NAT	Millivolt	19	4.0”	75,000
AVR30	NAT	Millivolt	12	4.0”	90,000

Note: Thermostats are not to be used on vented burner applications.

LP CONVERSION KIT		
BURNER MODEL	**VALVE TYPE**	**KIT NUMBER**
AVM21MTEKN	Manual	CKV111
AVR21MTEKN	Millivolt	CKV112
AVM(24,30)MTEKN	Manual	CKV113
AVR(24,30)MTEKN	Millivolt	CKV114

Determining the Correct Burner Size for Your Fireplace

MINIMUM FIREPLACE DIMENSIONS MASONRY BUILT FIREPLACES Chimney Height Minimum of 6 Feet				
BURNER MODEL	FRONT WIDTH IN INCHES*	DEPTH IN INCHES	HEIGHT IN INCH-ES	MINIMUM VENT IN SQ. INCH-ES
AV(M,R)21	24	18	18	49
AV(M,R)24	30	18	19	71
AV(M,R)30	36	18	21	71
MINIMUM FIREPLACE DIMENSIONS FACTORY BUILT FIREPLACES Chimney Height Minimum of 10 Feet				
BURNER MODEL	FRONT WIDTH IN INCHES*	DEPTH IN INCHES	HEIGHT IN INCH-ES	MINIMUM VENT IN SQ. INCH-ES
AV(M,R)21	24	18	18	49
AV(M,R)24	30	18	19	71
AV(M,R)30	36	18	21	71

FIREPLACE PREPARATION

- Turn off gas supply to fireplace or firebox.
- Have the fireplace floor and chimney professionally cleaned to remove ashes, soot, creosote or other obstructions. Have this cleaning performed annually after installation.
- Seal any fresh air vents or ash clean-out doors located on floor or wall of fireplace. If not, drafting may cause pilot outage or sooting. Use a heat-resistant sealant. Do not seal chimney flue damper.

Installing Damper Clamp
Remove all ashes or other debris from the fireplace. If the fireplace is equipped with an ash dump be sure to seal the door with furnace cement or high temperature silicone. Be sure to check the damper for proper operation and verify that the flue passageway is open. Attach damper clamp to the vent damper and tighten hold down bolt.

Place the clamp over the lip of the damper and tighten the hold down bolt until the clamp is securely attached to the damper. This will prevent the damper from accidentally closing.

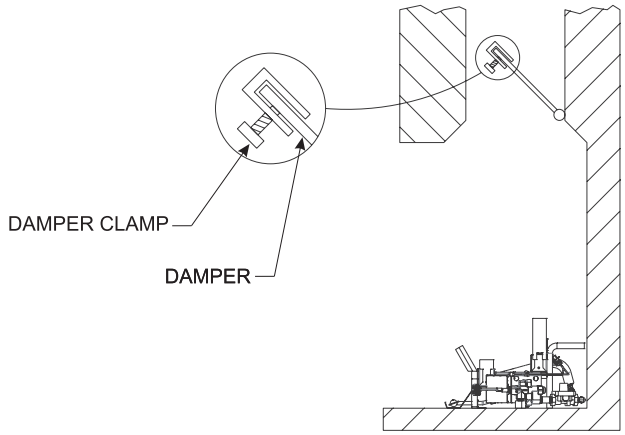

TYPICAL FIREPLACE

Figure 1

INTRODUCTION

Introduction
Always consult your local Building Department regarding regulations, codes or ordinances which apply to the installation of a vented decorative gas log set in a solid-fuel burning fireplace. This appliance is only for use with the type of gas indicated on the rating plate.

Instructions to Installer
1. Installer must leave instruction manual with owner after installation.
2. Installer must have owner fill out and mail warranty card supplied with the fireplace.
3. Installer should show owner how to start and operate the fireplace.

⚠ WARNING

Any change to this appliance or its controls can be dangerous. Improper installation or use of the appliance can cause serious injury or death from fire, burns, explosion or carbon monoxide poisoning.

General Information
Any alteration of the original design, installed other than as shown in these instructions or use with a type of gas not shown on the rating plate is the responsibility of the person and company making the change.

Important
All correspondence should refer to complete Model No., Serial No. and type of gas. This information can be found on the data plate supplied with the burner.

Notice: During initial use of the logs and branches you will detect an odor as the logs and branches are cured. This is normal.

⚠ WARNING

A fireplace screen must be in place when this appliance is in operation. Unless other provisions for combustion air are provided, the screen shall have an opening(s) for introduction of combustion air.

⚠ WARNING

When this decorative gas appliance is used in a fireplace equipped with a combustion air kit and glass doors, the glass doors should remain open during log set operation. This will maximize the radiant heat provided to the surrounding area, and minimize overheating of any valve installation. The glass doors may be closed when the log set is not in use.

GAS SUPPLY

Check all local codes for requirements, especially for the size and type of gas supply line required.

Recommended Gas Pipe Diameter

Pipe Length	Schedule 40 Pipe Inside Diameter		Tubing, Type L Outside Diameter	
	Nat.	L.P.	Nat.	L.P.
0-10 feet	1/2-in	3/8-in	1/2-in	3/8-in
10-40 feet	1/2-in	1/2-in	5/8-in	1/2-in
40-100 feet	1/2-in	1/2-in	3/4-in	1/2-in
100-150 feet	3/4-in	1/2-in	7/8-in	3/4-in

***NOTICE*:** Never use plastic pipe. Check to confirm whether your local codes allow copper tubing or galvanized.

***NOTICE*:** Since some municipalities have additional local codes, it is always best to consult your local authority and installation code.

Installing a New Main Gas Shut Off Valve
Each appliance should have its own manual gas shut off valve.

In the state of Massachusetts the gas shut off valve must be a T handle type.

A manual main gas shut off valve should be located in the vicinity of the unit. Where none exists, or where its size or location is not adequate, contact your local authorized installer for installation or relocation.

Compounds used on threaded joints of gas piping shall be resistant to the action of liquefied petroleum gases. The gas lines must be checked for leaks by the installer. Testing for leaks on all exposed connections should be done with leak detection test solution. After testing is complete, all solution should be cleaned off. On unexposed connections, a pressure test should be made.

Never use an exposed flame to check for leaks. Appliance must be disconnected from piping at inlet of control valve and pipe capped or plugged for pressure test. Never pressure test with appliance connected; control valve will sustain damage!

A gas valve and ground joint union should be installed in the gas line upstream of the gas control to aid in servicing. It is required by the National Fuel Gas Code that a drip line be installed near the gas inlet. This should consist of a vertical length of pipe tee connected into the gas line that is capped on the bottom in which condensation and foreign particles may collect.

The use of the following gas connectors is recommended:

— ANSI Z21.24 Appliance Connectors of Corrugated Metal Tubing and Fittings
— ANSI Z21.45 Assembled Flexible Appliance Connectors of Other Than All-Metal Construction

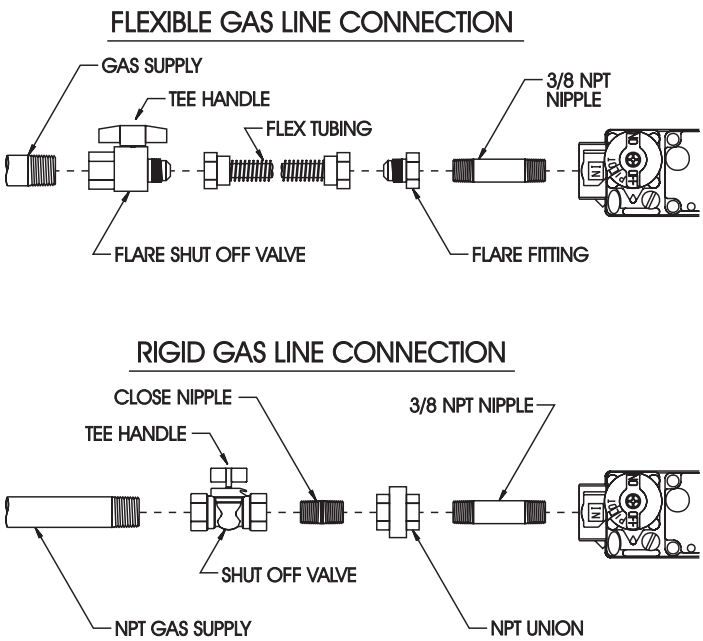

Figure 2

The above connectors may be used if acceptable by the authority having jurisdiction. The state of Massachusetts requires that a flexible appliance connector cannot exceed three feet in length. A gas valve and ground joint union should be installed in the gas line upstream of the gas control to aid in servicing. It is required by the National Fuel Gas Code that a drip leg be installed near the gas inlet. See Figure 3. This should consist of a vertical length of pipe tee connected into the gas line that is capped on the bottom in which condensation and foreign particles may collect.

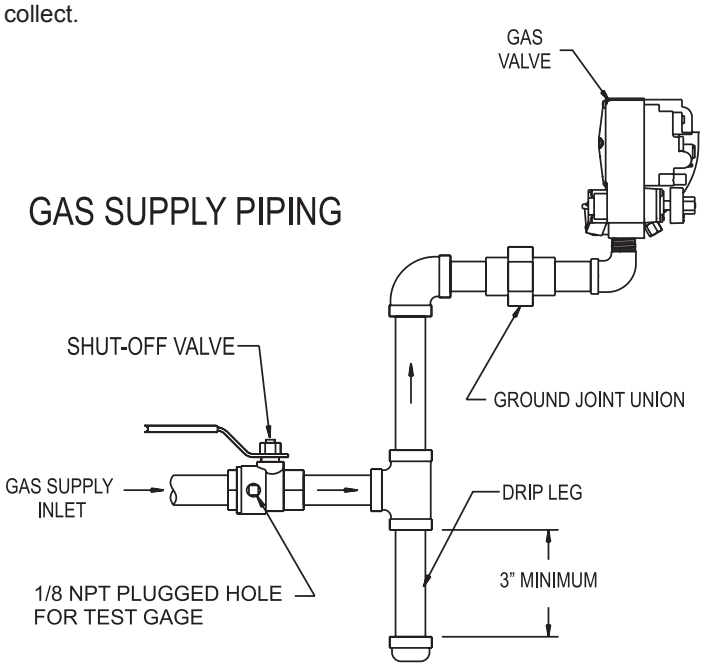

Figure 3

Pressure Testing of the Gas Supply System

1. To check the inlet pressure to the gas valve, a 1/8-in (3.175mm) N.P.T. plugged tapping, accessible for test gauge connection, must be placed immediately upstream of the gas supply connection to the appliance.
2. The appliance and its individual shutoff valve must be disconnected from the gas supply piping system during any pressure testing of that system at test pressures in excess of 1/2 psig (3.5 kPa).
3. The appliance must be isolated from the gas supply piping system by closing its individual manual shutoff valve during any pressure testing of the gas supply piping system at test pressures equal to or less than 1/2 psig (3.5 kPa).

Attention! If one of the procedures results in pressures in excess of 1/2 psig (14-in w.c.) (3.5 kPa) on the appliance gas valve, it will result in a hazardous condition.

Checking Manifold Pressure

Millivolt Natural gas models will have a manifold pressure of approximately 4.0-in w.c. (.871kPa) at the pressure regulator outlet with the inlet pressure to the pressure regulator from a minimum of 5.0-in w.c. (1.120kPa) for the purpose of input adjustment to a maximum of 10.5-in w.c. (2.615kPa). **Manual** Natural gas models will have a manifold pressure of approximately 4.5-in w.c. (1.12kPa) at the pressure regulator outlet with the inlet pressure to the pressure regulator from a minimum of 5.0-in w.c. (1.74kPa) for the purpose of input adjustment to a maximum of 10.5-in w.c. (2.615kPa). **Millivolt and Manual** Propane gas models will have a manifold pressure approximately 10.0-in w.c. (2.49kPa) at the pressure regulator outlet with the inlet pressure to the pressure regulator from a minimum of 11.0-in w.c. (2.739kPa) for the purpose of input adjustment to a maximum of 13.0-in w.c. (3.237kPa).

Manual

***NOTICE*:** A test gage connection is located downstream of the gas appliance pressure regulator for measuring gas pressure. The connection is a 1/8 inch 3mm) N.P.T. plugged tapping.

Millivolt

***NOTICE*:** The gas control is equipped with a captured screw type pressure test point, therefore it is not necessary to provide a 1/8-in test point up stream of the control.

ASSEMBLY

BEGINNING INSTALLATION

1. Remove all contents from the burner carton.
2. Check the contents of the carton against the shipping and packing list or the parts list in this manual. Report any missing or damaged parts to your retailer.
3. Remove any and all protective wrapping from the appliance.
4. **TURN OFF THE GAS SUPPLY SYSTEM.**
5. Place the fireplace damper in the fully open position and install the damper clamp over the lip of the damper **(the damper must be in a fully open position any time that this appliance is in operation)**. Using a 3/8-in. nut driver or socket and turning in a clockwise direction, tighten the damper clamp bolt until the clamp is secure. The damper clamp must be in place to maintain the minimum permanent vent opening.
   Notice: The State of Massachusetts requires that the chimney flue damper, when used with decorative gas log sets, be welded open or completely removed.
6. Place one adjustable wrench on the gas stub, and one on the fitting. Turn the wrench on the gas cap counter-clockwise to remove the existing cap.
7. Clean the pipe threads on the gas stub with a wire brush or steel wool. Apply the appropriate compound to the steel fittings before making any connections. Compounds used on threaded joints of gas piping shall be resistant to the action of liquefied petroleum gases.

FOR EMBER BURNER INSTALLATIONS

1. Place the burner upside down with the grate tines facing you, on the floor outside of the fireplace.
2. Use an adjustable wrench to rotate ember burner gas feed plug counter-clockwise to remove it.
3. Apply the appropriate compound to the 3/8-in. NPT base (the large end) of the compression fitting. Compounds used on threaded joints of gas piping shall be resistant to the action of liquefied petroleum gases.
4. Install the compression fitting into the ember burrner gas feed (where the plug was removed in step 2). To secure the fitting, rotate it clockwise with an adjustable wrench. See Figure 4.

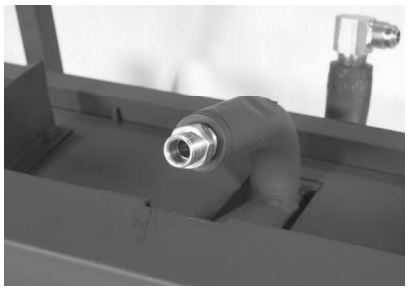

Figure 4

5. Slide the compression fitting hex cap, threads facing out, over the end of the ember burner pipe.
6. Slide the compression ring over the end of the burner pipe. See Figure 5.

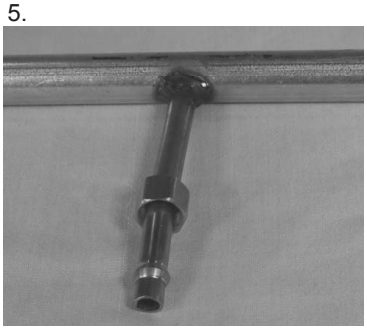

Figure 5

7. With the main burner upside down, insert the ember burner tube into the gas feed tube. Burner ports will face down, but will be facing up when you turn the main burner upright. See Figure 6.
8. Using two adjustable wrenches, one to hold the compression base and the other turning in a clockwise direction, install the ember burner into the ember burner gas feed. See Figures 6 and 7.

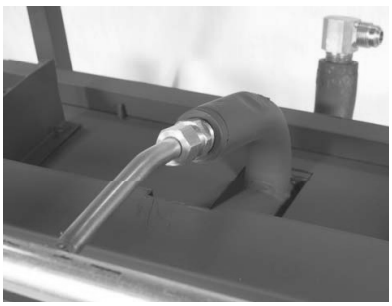

Figure 6

Figure 7

9. Turn the burner right side up. Install the burner clips (one each side) onto the rear burner pan. See Figure 8.

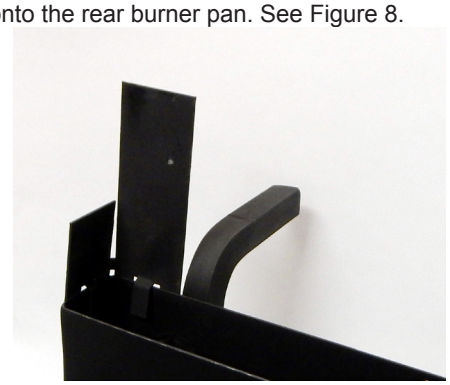

Figure 8

ASSEMBLY

FOR EMBER BED INSTALLATIONS

1. Insert the bottom lip of the ember burner pan under the ember burner. See Figure 9.
2. Push the ember burner pan backwards, towards the main burner, centering the top of the ember burner pan beneath the grate support. See Figure 10.

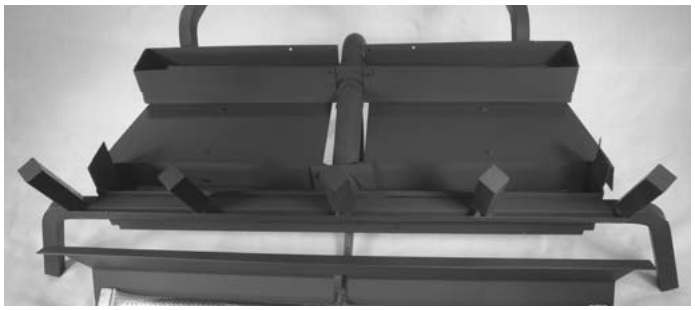

Figure 9

Figure 10

BEFORE FULLY INSTALLING THE APPLIANCE

You must secure the gas burner to the fireplace floor. If not, the entire unit may move when you adjust the controls. Movement of unit may cause shifting of the gas logs which leads to sooting and improper burning. Grate movement could cause a gas leak.

Special care is required if you are installing the unit into a sunken fireplace. You must raise the fireplace floor with non-combustible material to allow access to gas log controls. This will ensure adequate air flow and guard against sooting. Raise the fireplace floor using noncombustible materials.

Assembly Procedure:

1. Place the burner in the fireplace or firebox. Make certain the entire ember burner is inside the front edge of the fireplace or firebox.
2. An anchor hole is provided in the two bottom side members of the grate frame. After centering the grate correctly, mark the hole positions on the fireplace/firebox floor. Drill two 5/32-in. diameter holes approximately 1-1/2" deep for masonry screws or 1/8-in. hole for sheet metal screws.
3. Anchor the grate to the fireplace/firebox floor using the screws provided. Refer to Figure 11.

Proper installation of the grate is essential to prevent any movement of the gas logs and controls during operation.

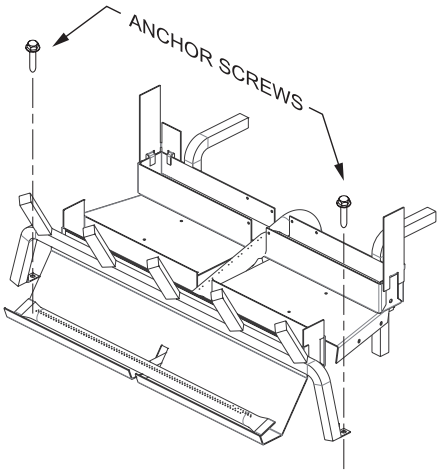

Figure 11

INSTALLATION

LOCATING THE UNIT

This appliance must be installed only in a solid-fuel burning fireplace, which contains a working flue, and is constructed of non-combustible materials.

IMPORTANT
For units with valve applications, complete pilot placement and gas line assembly before you place the unit into the fireplace.

IMPORTANT
Seal any fresh air vents or ash clean-out doors located on the floor or wall of the fireplace. If this is not performed, drafting may cause pilot outage or sooting. Use a heat-resistant sealant. DO NOT seal the chimney flue damper.

Gas supply system must be installed in accordance with the U.S. National Fuel Gas Code.
This appliance and its individual shut off valve must be disconnected from the gas supply piping system during any system pressure test in excess of 1/2 PSI (3.5 KPA).
Use a system manual shut off valve to shut off the gas supply to this gas appliance before continuing with installation procedures.

⚠ DANGER

To avoid injury and property damage, DO NOT obstruct the flow of combustion and ventilation air when installing or operating the appliance.

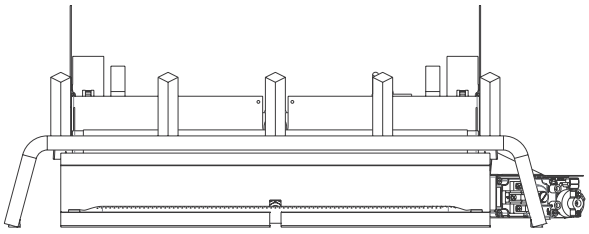

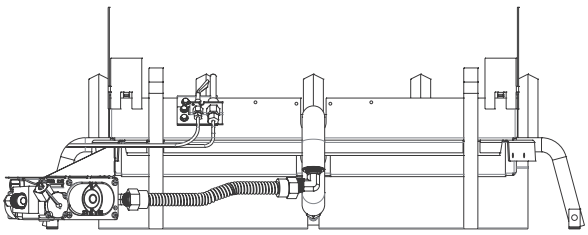

Figure 12 - Burner Pan with Natural Gas Millivolt Control Valve - Front and Rear View

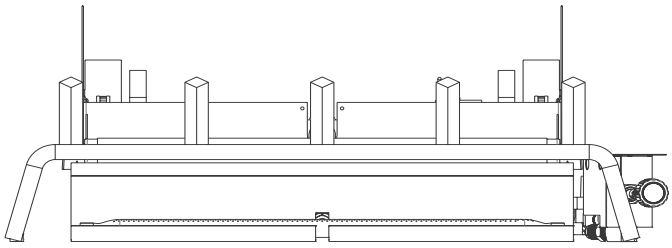

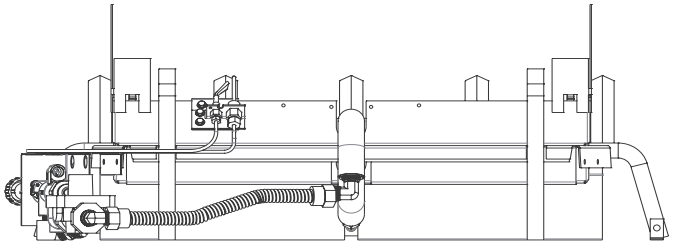

Figure 13 - Burner Pan with Natural Gas Manual Control Valve - Front and Rear View

SET UP AND ASSEMBLY

IMPORTANT
BEFORE YOU BEGIN - Check the gas pressure at the fireplace stub to ensure proper minimum gas pressure (see the specifications beginning on page 8 of this manual).

IMPORTANT
BEFORE YOU BEGIN - Ensure that the firebox meets the minimum specifications of the appliance (see the specifications beginning on page 8 of this manual).

IMPORTANT
This appliance when first installed and used may produce odors. This is normal. Open a window when operating the appliance for the first time.

Tools Needed

2 Adjustable Wrench (at least one of which has a range of 3/4-inch for gas fittings)
2 Adjustable Pipe Wrenches
1 3/8-inch Nut Driver or Socket (for damper clamp)

INSTALLATION

⚠ WARNING

Failure to position the parts in accordance with all included pictures, diagrams and drawings, or failure to use only parts specifically approved with this appliance may result in property damage or personal injury.

IMPORTANT
Protect the pilot and valve assembly, and for Liquid Propane units, the air mixer at the side of the burner to protect it before installing sand. Remove protection from burner before use.

1. Pour the provided glass over the top and middle burner filling the burner pans. The glass should follow the slope of each burner pan, covering each burner completely.

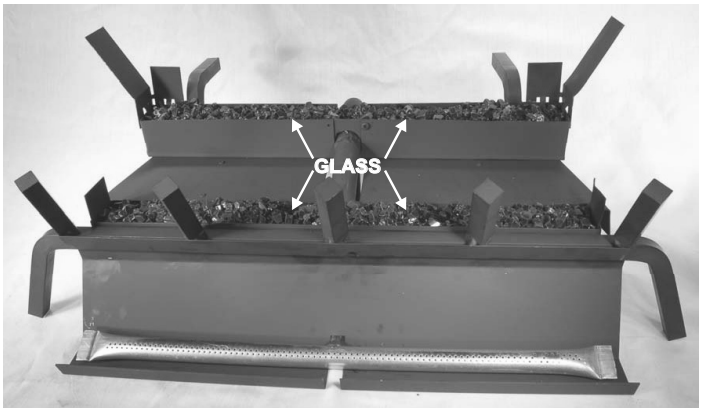

Figure 14

2. Spread the glowing embers over the ember burner.

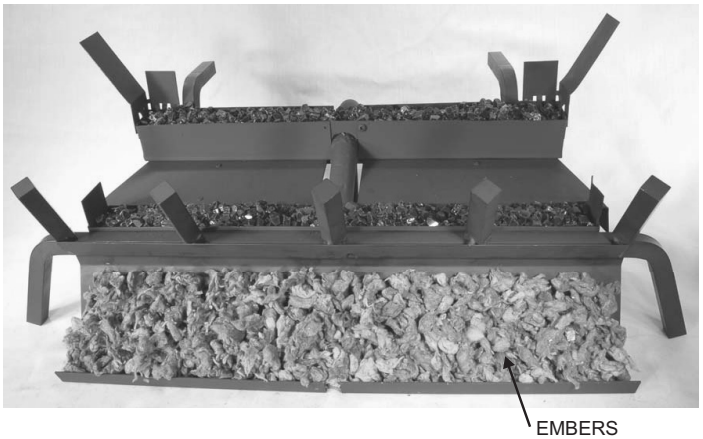

Figure 15

3. Place the lava rock around the burner assembly.

Figure 16

⚠ WARNING

Apply loose material (embers and lava rock) per instruction manual. DO NOT apply extra material not supplied with this appliance. All previously applied loose material (embers) must be removed prior to reapplication.

⚠ CAUTION

DO NOT place glowing embers, sand, rockwool mix, or lava rock in the area of the safety pilot assembly.

STOP!

Refer to the log set up instructions packaged with your Decorative Gas Logs.

4. Remove all contents from the Decorative Gas Log carton.
5. Check the contents of the carton against the shipping and packing list or the parts list in this manual. Report any missing or damaged parts to your retailer.
6. Remove any and all protective wrapping from the gas logs.
7. Arrange the decorative gas logs on the grate.

DOOR OPERATION

OPERATE THE FIREPLACE WITH THE BIFOLD GLASS DOORS IN ONLY THE FULLY OPEN POSITION.

NOTE: Always close the mesh firescreens when operating the fireplace with the glass doors fully open.

CORRECT DOOR POSITION WHEN OPERATING THE FIREPLACE

FULLY OPEN DOORS

Figure 17

INCORRECT DOOR POSITION WHEN OPERATING THE FIREPLACE

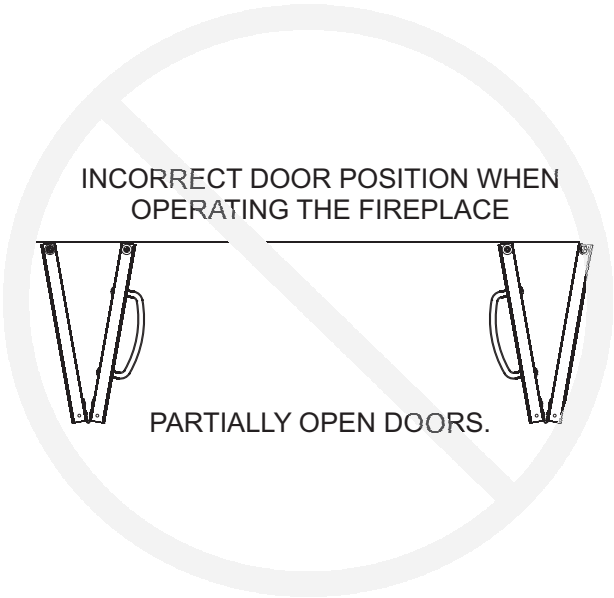

PARTIALLY OPEN DOORS.

⚠ WARNING

DO NOT operate the fireplace with the doors partially open or closed. Operating the fireplace with the doors partially open or closed creates a hazardous situation.

- Partially open doors can cause sooting on front of the fireplace.
- Closed doors can cause the glass to overheat and shatter.

Figure 18

MILLIVOLT LIGHTING INSTRUCTIONS

FOR YOUR SAFETY READ BEFORE LIGHTING

⚠ WARNING: If you do not follow these instructions exactly, a fire or explosion may result causing property damage, personal injury or loss of life.

A. This appliance has a pilot which must be lighted by hand. When lighting the pilot, follow these instructions exactly.

B. BEFORE LIGHTING smell all around the appliance area for gas. Be sure to smell next to the floor because some gas is heavier than air and will settle on the floor.

WHAT TO DO IF YOU SMELL GAS

- **Do not try to light any appliance.**
- **Do not touch any electrical switch; do not use any phone in your building.**
- **Immediately call your gas supplier from a neighbor's phone. Follow the gas supplier's instructions.**
- **If you cannot reach your gas supplier, call the fire department.**

C. Use only your hand to push in or turn the gas control knob. Never use tools. If the knob will not push in or turn by hand, don't try to repair it; call a qualified service technician. Force or attempted repair may result in a fire or explosion.

D. Do not use this appliance if any part has been under water. Immediately call a qualified service technician to inspect the appliance and to replace any part of the control system and any gas control which has been under water.

LIGHTING INSTRUCTIONS

⚠ WARNING

- **Any glass doors shall be opened when the appliance is in operation.**
- **A fireplace screen must be in place when the appliance is operating and, unless other provisions for combustion air are provided, the screen shall have an opening(s) for introduction of combustion air.**

1. STOP! Read the safety information above.
2. Set the ON/OFF siwtch to “OFF”.
3. Turn off all electric power to the appliance (if applicable).
4. Push in gas control knob slightly and turn clockwise to “OFF”.
5. Wait ten (10) minutes to clear out any gas. Then smell for gas, including near the floor. If you smell gas, STOP! Follow “B” in the safety information above. If you do not smell gas, go to the next step.
   NOTE: Knob cannot be turned from “PILOT” to “OFF” unless knob is pushed in slightly. Do not force.
6. Find Pilot - follow metal tube from gas control. The pilot is in front of the middle log on the right side.
7. Turn gas control knob counterclockwise to “PILOT”.

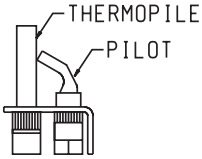

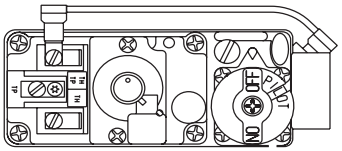

Gas control knob shown in “OFF” position.

8. Push in control knob all the way and hold in. Immediately light the pilot with a match and lighter rod that is provided with the burner. Continue to hold the control knob in for about one (1) minute after the pilot is lit. Release knob, and it will pop back up. Pilot should remain lit. If it goes out, repeat Steps 4 through 8.
   - If knob does not pop up when released, stop and immediately call a qualified service technician or gas supplier.
   - If the pilot will not stay lit after several tries, turn the gas control knob to “OFF” and call your service technician or gas supplier.
9. Turn gas control knob counterclockwise to “ON”.
10. Set the ON/OFF switch to “ON”.

TO TURN OFF GAS TO APPLIANCE

1. Set the ON/OFF switch to "OFF".
2. Push in gas control knob slightly and turn clockwise to "OFF". Do not force.

MANUAL LIGHTING INSTRUCTIONS

FOR YOUR SAFETY READ BEFORE LIGHTING

⚠ WARNING: If you do not follow these instructions exactly, a fire or explosion may result causing property damage, personal injury or loss of life.

A. This appliance has a pilot which must be lighted by hand. When lighting the pilot, follow these instructions exactly.

B. BEFORE LIGHTING smell all around the appliance area for gas. Be sure to smell next to the floor because some gas is heavier than air and will settle on the floor.

WHAT TO DO IF YOU SMELL GAS

- **Do not try to light any appliance.**
- **Do not touch any electrical switch; do not use any phone in your building.**
- **Immediately call your gas supplier from a neighbor's phone. Follow the gas supplier's instructions.**
- **If you cannot reach your gas supplier, call the fire department.**

C. Use only your hand to push in or turn the gas control knob. Never use tools. If the knob will not push in or turn by hand, don't try to repair it; call a qualified service technician. Force or attempted repair may result in a fire or explosion.

D. Do not use this appliance if any part has been under water. Immediately call a qualified service technician to inspect the appliance and to replace any part of the control system and any gas control which has been under water.

LIGHTING INSTRUCTIONS

⚠ WARNING

- **Any glass doors shall be opened when the appliance is in operation.**
- **A fireplace screen must be in place when the appliance is operating and, unless other provisions for combustion air are provided, the screen shall have an opening(s) for introduction of combustion air.**

1. STOP! Read the safety information above.
2. Push in manual gas control knob slightly and turn clockwise ↷ to “OFF”. Do not force.
3. Wait ten (10) minutes to clear out any gas. Then smell for gas, including near the floor. If you smell gas, STOP! Follow “B” in the safety information above. If you do not smell gas, go to the next step.
4. Find pilot - follow metal tube from gas control. The pilot is in front of the middle log on the right side.
5. Turn manual gas control knob counterclockwise ↶ to “PILOT”.
6. Push in control knob all the way and hold in. Immediately light the pilot with a match and the lighter rod that is provided with the burner. Continue to hold the control knob in for about one (1) minute after the pilot is lit. Release knob, and it will pop back up. Pilot should remain lit. If it goes out, repeat Steps 2 through 6.
   - If knob does not pop up when released, stop and immediately call a qualified service technician or gas supplier.
   - If the pilot will not stay lit after several tries, turn the gas control knob to “OFF” and call your service technician or gas supplier.
7. Turn manual gas control knob counterclockwise ↶ to “ON”.

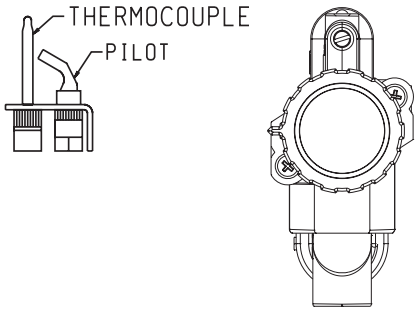

TO TURN OFF GAS TO APPLIANCE

1. Push in gas control knob slightly and turn clockwise ↷ to “OFF.” Do not force.

PILOT AND MAIN BURNER FLAME CHARACTERISTICS

Pilot Flame Pattern
Figure 19 shows a correct pilot flame pattern. The correct flame will be blue and will extend beyond the thermocouple/thermopile. The flame will surround the thermocouple/thermopile just below the tip. A slight yellow flame may occur where the pilot flame and main burner flame meet.

After use, cleaning of the pilot burner may be required for the proper flame. The pilot orifice can be cleaned with high pressure air or by placing under running water. Pilot orifice must be dry before replacement. Use canned air to clean inside the pilot after the pilot orifice has been removed.

To Remove Pilot Orifice
1. Disconnect the pilot supply line at the pilot burner.
2. Remove pilot orifice from pilot burner. It may be necessary to tap on pilot burner in order to remove the pilot orifice.

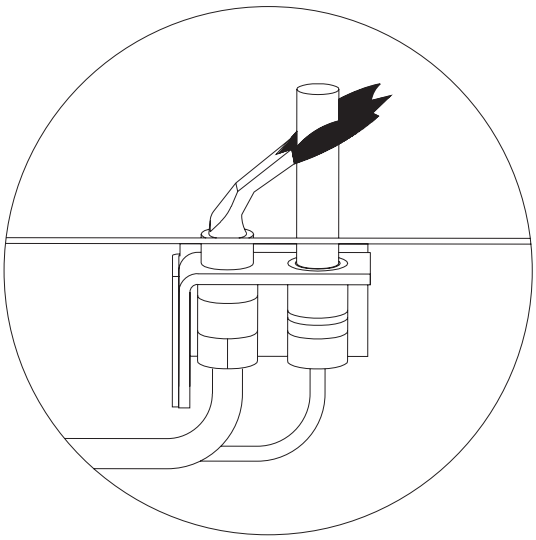

Pilot Flame Pattern
Figure 19

If pilot flame pattern is incorrect
- See Troubleshooting, page 22.

Main Burner Flame Pattern
The main burner flame will be yellow with a blue base.
Main Burner Flame Ignition and Extinction
When the main burner is ignited it will take a few seconds for the full flame pattern to develop.

When the main burner is extinguished it will take a few seconds for the flames to disappear. It is normal to have the flames burn down near the rock wool, as the remaining gas is burned.

WIRING

Thermostats are not approved on vented decorative appliances.

Label all wires prior to disconnection when servicing controls. Wiring errors can cause improper and dangerous operation. Verify proper operation after servicing.

Millivolt gas valve does not require 24 or 110 volts. See Figure 20 to provide optional wall switch or remote control.

It is important to use wire of a gauge proper for the length of the wire:

RECOMMENDED WIRE GAUGES

Maximum Length	*Wire Gauge*
1' to 10'	18
10' to 25'	16
25' to 35'	14

Use the two leads (black wires) from **ON/OFF** switch to attach optional components.

Check System Operation

Millivolt system and all individual components may be checked with a millivolt meter 0-1000 MV range.

- Across the thermopile terminals, 400-450 millivolts with thermostat OFF.
- Across the thermopile terminals, 150-250 millivolts with thermostat ON.

750 Millivolt System

When you ignite the pilot, the thermocouple produces millivolts (electrical current) which energizes the magnet in the gas valve. After 30 seconds to 1 minute time period you can release the gas control knob and the pilot will stay ON. Allow your pilot flame to operate an additional one (1) to two (2) minutes before you turn the gas control knob from the PILOT position to the ON position. This time period allows the millivolts (electrical current) to buildup to a sufficient level allowing the gas control to operate properly.

Millivolt Control

The valve regulator controls the burner pressure which should be checked at the pressure test point. Turn captured screw counter clockwise 2 or 3 turns and then place tubing to pressure gauge over test point (Use test point “A” closest to control knob). After taking pressure reading, be sure and turn captured screw clockwise firmly to re-seal. Do not over torque. Check for gas leaks.

Remote Receiver -Millivolt Models

Use the following steps to place the **remote receiver** adjacent to the gas valve.

Attention:

1. The remote receiver **can not** be placed behind the gas valve and burner assembly.
2. When facing the appliance, the remote receiver must be placed in the **right** side firebox, toward the front.

NOTICE: Do not let remote control receiver come in contact with burner assembly.

Refer to remote control installation and operating instructions for more details on remote control.

AVR

Notice: **(Wiring harness located in envelope)**

Connect the two - 1/4-in. terminals onto the TH and TH/TP terminals on valve. Place decorative log to **right** of the gas valve and burner assembly. When connecting to remote receiver, cut off 1/4-in. terminals from wires attached to ON/OFF switch. Strip wires back about 1/4-in. Connect stripped ends into remote receiver.

Millivolt Wiring Diagram

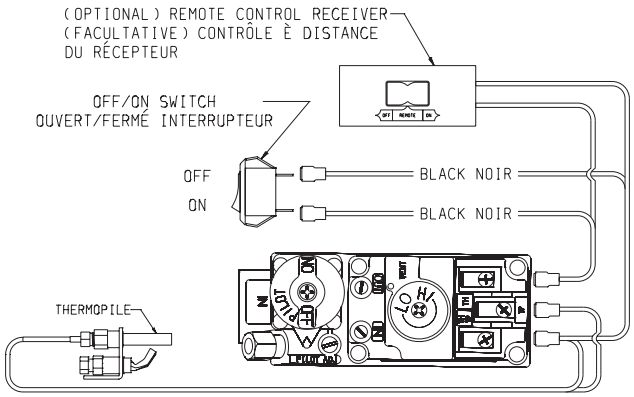

Figure 20

MAINTENANCE & SERVICE

Maintenance
The Decorative Gas Log Set should be thoroughly inspected at least once a year by a qualified technician.
At the beginning of each season, check for:

- Chimney flue or vent pipe is drawing properly, and that vent pipe connections are tight.
- Blockages at the chimney or vent termination.
- Creosote and soot build-up in chimney and/or vents (clean if necessary).
- Inspect the pilot and burners.
- Remove dust, cobwebs, pet hair or other debris from the fireplace.
- Check for gas leaks. See page 11.

The burner system has been adjusted for proper operation at the factory. No adjustment is necessary, other than altitude de-rate or pilot flame.

NEVER enlarge valve orifices or burner ports.

Sooting
Some sooting of your log set is normal, adding to the appearance of burned wood. If excessive sooting accumulates, clean the logs using either of the following options::

A. When the logs are cold, remove logs from burner, brush the soot off with a brush. Do not use water or soot cleaners at the same time as a brush.
B. When the logs are cold, remove logs from burner. Take logs outside and remove soot with an air hose. Refer to Installation Instructions supplied with logs for re-installation information.

Cleaning
Keep the control compartment, logs and burner area surrounding the logs clean.

THE LOGS CAN GET VERY HOT— HANDLE ONLY WHEN COOL.

Always keep the appliance area clear and free from combustible materials, gasoline, and other flammable vapors and liquids.

Never obstruct the flow of combustion and ventilation air. Keep the front of the appliance clear of all obstacles and materials.

Inspecting Venting System
A vented fireplace venting system is designed and constructed to develop a positive flow adequate to remove flue gases to the outside atmosphere.

Any foreign objects in the venting system, may cause flue gases to flow into the room.

Periodic examination and/or cleaning of the venting system of the solid-fuel burning fireplace must be done by a qualified service person. Visually inspect the damper and flue area for excessive soot build-up. This soot (carbon) may be removed by brushing with a soft bristle brush.

TROUBLESHOOTING

PROBLEM OBSERVED	POSSIBLE CAUSE	CORRECTIVE MEASURE
Gas odor during setup	Gas Leak	What To Do If You Smell Gas • Do not try to light any appliance. • Do not touch any electrical switch; do not use any phone in your building. • Immediately call your gas supplier from a neighbor's phone. Follow the gas supplier's instructions. • If you cannot reach your gas supplier, call the fire department.
Gas odor before first ignition	Gas Leak	
Pilot will not ignite, or will not stay lit	No gas to pilot	Make sure gas is on, in pilot position
	Thermocouple not hot	Depress valve knob for at least 1 minute
	Improper pilot flame adjustment	See Pilot Characteristics - adjust flame
	Loose connections on the thermocouple	Check gas connections
	Faulty pilot or thermocouple	Replace Safety Pilot
	Faulty valve	Replace Valve
Delayed ignition	Low gas pressure	Check gas supply pressure
	Clogged or dirty burner ports	Clean burner ports
	Blocked orifice	Check orifice opening
	Faulty valve	Replace valve
Burner does not light but pilot remains on	Low gas pressure	Check gas supply pressure
	Clogged or dirty burner ports	Clean burner ports
	Blocked orifice	Check orifice opening
	Faulty pilot or thermocouple	Replace safety pilot
	Faulty valve	Replace valve
Burner lights but does not stay lit while pilot remains on	Low gas pressure	Check gas supply pressure
	Faulty valve	Replace valve
	Faulty pilot or thermocouple	Replace Safety pilot
	Clogged or dirty burner ports	Clean burner ports
Burner & pilot light but will not stay on	Low gas pressure	Check gas supply pressure
	Not enough fresh air for pilot	Open door or window - ventilate
	Faulty valve	Replace valve
	Faulty pilot or thermocouple	Replace safety pilot
	Clogged or dirty burner ports	Clean burner ports
	Remote control overheating	Move away from flame
	Remote control batteries failing	Replace batteries
Incorrect burner flame	Incorrect gas supply or pressure	Check gas supply pressure
	Blocked orifice	Check orifice opening
	Clogged or dirty burner ports	Clean burner ports
	Faulty valve	Replace valve
	High altitude	Adjust orifice size for altitude
Backfire of burner	Blocked orifice	Check orifice opening
	Clogged or dirty burner ports	Clean burner ports
	Low gas pressure	Check gas supply pressure
Appliance produces unwanted odors	Vapors from paint, hair spray, glues, etc.	Ventilate room
	Initial burn-off of manufacturing chemicals	Ventilate room
Logs appear to smoke	Vapors from manufacturing chemicals	Ventilate room
	Logs curing	See "Curing of Refractory Logs"
Whistle noise from appliance	Air in gas line	Bleed lines
	Control knob not in fully open position	Open control knob to full position
	Spiral gas flex line	Replace gas feed line

AVM PARTS LIST & EXPLODED VIEW

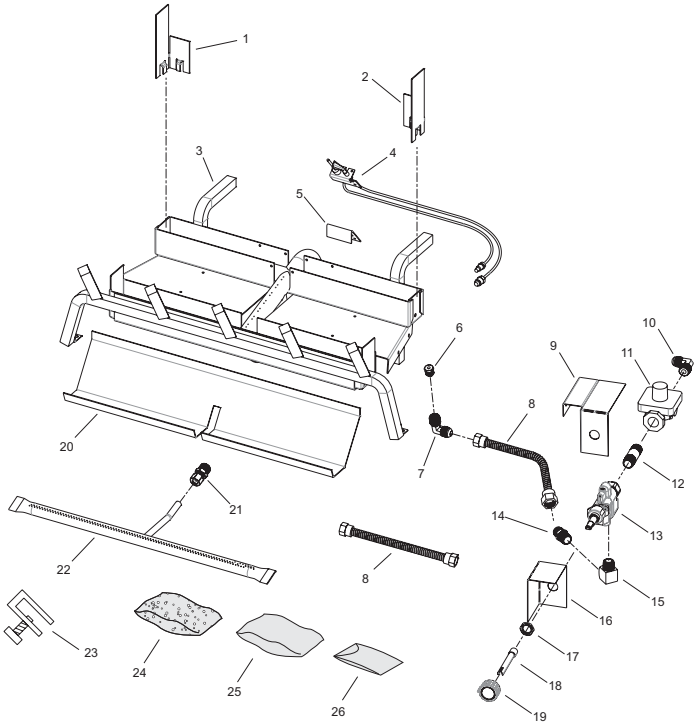

⚠ WARNING

Failure to position the parts in accordance with these diagrams or failure to use only parts specifically approved with this appliance may result in property damage or personal injury.

INDEX NO	PART NO			DESCRIPTION
	AVM21	AVM24	AVM30	
1	R12114	R12114	R12114	Clip - Left
2	R12115	R12115	R12115	Clip - Right
3	R12104	R12105	R12106	Triple Burner Assembly with Millivolt Valve
4	R12051	R12051	R12051	Pilot Assembly
5	35471	35471	35471	Pilot Bracket
6	R12044	R12044	R12045	Orifice
7	R12055	R12055	R12055	Orifice Holder
8	R12083	R12083	R12083	Flexline
9	35642	35643	35644	Valve Bracket
10	R1088	R1088	R1088	Elbow
11	R7160	R7160	R7160	Regulator
12	P133	P133	P133	Nipple
13	R12049	R12049	R12049	Manual Valve
14	B100100	B100100	B100100	Adapter
15	R12147	R12147	R12147	Street Elbow
16	35641	35641	35641	Knob Shield
17	R1652	R1652	R1652	Jam Nut
18	R12088	R12088	R12088	Control Rod
19	R12050	R12050	R12050	Knob
20	R12162	R12163	R12164	Ember Burner Pan
21	R12116	R12116	R12116	Compression Fitting
22	R12157	R12158	R12159	Ember Burner
23	R2809	R2809	R2809	Damper Clamp
24	R12057	R12057	R12057	Rockwool Mix
25	11788	11788	11788	Decorative Rock
26	R11769	R11769	R11769	Crushed Glass

AVR PARTS LIST & EXPLODED VIEW

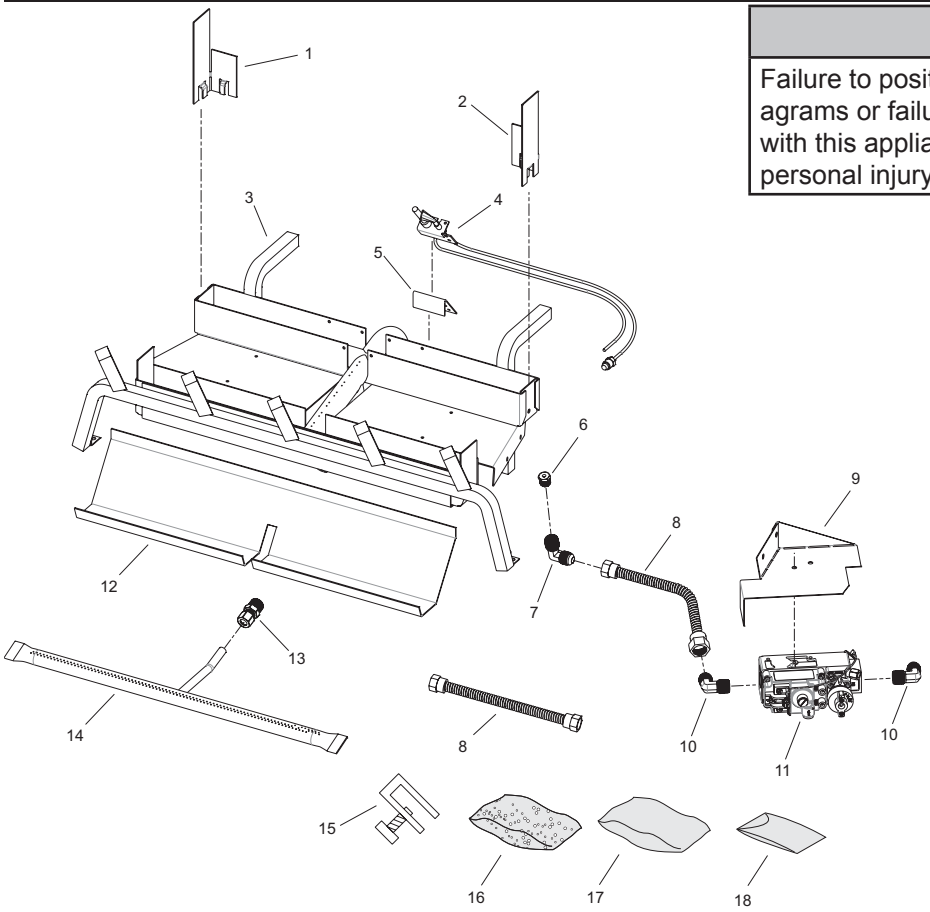

⚠ WARNING

Failure to position the parts in accordance with these diagrams or failure to use only parts specifically approved with this appliance may result in property damage or personal injury.

INDEX NO	PART NO			DESCRIPTION
	AVR21	AVR24	AVR30	
1	R12114	R12114	R12114	Clip - Left
2	R12115	R12115	R12115	Clip - Right
3	R12104	R12105	R12106	Triple Burner Assembly with Millivolt Valve
4	R12052	R12052	R12052	Pilot Assembly
5	35471	35471	35471	Pilot Bracket
6	R12044	R12044	R12045	Orifice
7	R12055	R12055	R12055	Orifice Holder
8	R12083	R12083	R12083	Flexline
9	35643	35643	35643	Valve Bracket
10	R10882	R10882	R10882	Elbow
11	R5598	R5598	R5598	Millivolt Valve
12	R12162	R12163	R12164	Ember Burner Pan
13	R12116	R12116	R12116	Compression Fitting
14	R12157	R12158	R12159	Ember Burner
15	R2809	R2809	R2809	Damper Clamp
16	R12057	R12057	R12057	Rockwool Mix
17	11788	11788	11788	Decorative Rock
18	R11769	R11769	R11769	Crushed Glass
N/S	R5910	R5910	R5910	Log Switch
N/S	R12089	R12089	R12089	Wire Harness

N/S - Not Shown

MASTER PARTS DISTRIBUTOR LIST

To Order Parts Under Warranty, please contact your local Empire dealer. See the dealer locator at www.empirecomfort.com. To provide warranty service, your dealer will need your name and address, purchase date and serial number, and the nature of the problem with the unit.

To Order Parts After the Warranty Period, please contact your dealer or one of the Master Parts Distributors listed below. This list changes from time to time. For the current list, please click on the Master Parts button at www.empirecomfort.com.

Please note: Master Parts Distributors are independent businesses that stock the most commonly ordered Original Equipment repair parts for Heaters, Grills, and Fireplaces manufactured by Empire Comfort Systems Inc.

Dey Distributing
1401 Willow Lake Boulevard
Vadnais Heights, MN 55101

Phone: 651-490-9191
Toll Free: 800-397-1339
Website: www.deydistributing.com
Parts: Heater, Hearth and Grills

Victor Division of F. W. Webb Company
200 Locust Street
Hartford, CT 06114

Phone: 860-722-2433
Toll Free: 800-243-9360
Fax: 860-293-0479
Toll Free Fax: 800-274-2004
Websites: www.fwwebb.com & www.victormfg.com
Parts: Heater, Hearth and Grills

East Coast Energy Products
10 East Route 36
West Long Branch, NJ 07764

Phone: 732-870-8809
Toll Free: 800-755-8809
Fax: 732-870-8811
Website: www.eastcoastenergy.com
Parts: Heater, Hearth and Grills

HOW TO ORDER REPAIR PARTS

Parts Not Under Warranty

Parts can be ordered through your Service Person, Dealer, or a Master Parts Distributor. See this page for the Master Parts Distributors list. For best results, the **service person or dealer** should order parts through the distributor. Parts can be shipped directly to the **service person/dealer**.

Warranty Parts

Warranty parts will need a proof of purchase and can be ordered by your Service Person or Dealer. Proof of purchase is **required** for warranty parts.

All parts listed in the Parts List have a Part Number. When ordering parts, first obtain the Model Number and Serial Number from the name plate on your equipment. Then determine the Part Number (**not** the Index Number) and the Description of each part from the following illustration and part list. Be sure to give all this information . . .

Appliance Model Number _____ Part Description _____

Appliance Serial Number _____ Part Number _____

Type of Gas (Propane or Natural) _____

Do not order bolts, screws, washers or nuts. They are standard hardware items and can be purchased at any local hardware store.

Shipments contingent upon strikes, fires and all causes beyond our control.

APPLIANCE SERVICE HISTORY

Date	Dealer Name	Service Technician Name	Service Performed/Notes

WARRANTY

Empire Comfort Systems Inc. warranties this hearth product to be free from defects at the time of purchase and for the periods specified below. Hearth products must be installed by a qualified technician and must be maintained and operated safely, in accordance with the instructions in the owner's manual. This warranty applies to the original purchaser only and is not transferable. All warranty repairs must be accomplished by a qualified gas appliance technician.

Limited Lifetime – Refractory Logs

Should any part fail because of defective workmanship or material during the normal life of this product, Empire will repair or replace at Empire's option.

Limited Five-Year Parts Warranty – Burners, Grates, Ceramic Fiber Logs

Should any part fail because of defective workmanship or material within five years from the date of purchase, Empire will repair or replace at Empire's option.

Limited Two-Year Parts Warranty – Valves

Should the valve fail because of defective workmanship or material within two years from the date of purchase, Empire will repair or replace at Empire's option.

Limited One-Year Parts Warranty – Remote Controls, Accessories, and Parts

Should any remote control, thermostat, accessory, or other part fail because of defective workmanship within one year from the date of purchase, Empire will repair or replace at Empire's option.

Duties of the Owner

The appliance must be installed by a qualified installer and operated in accordance with the instructions furnished with the appliance.

A bill of sale, cancelled check, or payment record should be kept to verify purchase date and establish warranty period.

Ready access to the appliance for service.

What Is Not Covered

Damages that might result from the use, misuse, or improper installation of this appliance.

Travel, diagnostic costs and freight charges on warranted parts to and from the factory.

Claims that do not involve defective workmanship or materials.

Unauthorized service or parts replacements.

Removal and reinstallation cost.

Inoperable due to improper or lack of maintenance.

How To Get Service

To make a claim under this warranty, please have your receipt available and contact your installing dealer. Provide the dealer with the model number, serial number, type of gas, and purchase verification. The installing dealer is responsible for providing service and will contact the factory to initiate any warranted parts replacements. Empire will make replacement parts available at the factory. Shipping expenses are not covered.

If, after contacting your Empire dealer, service received has not been satisfactory, contact: Consumer Relations Department, Empire Comfort Systems Inc., PO Box 529, Belleville, Illinois 62222, or send an e-mail to info@empirecomfort.com with "Consumer Relations" in the subject line.

Your Rights Under State Law

This warranty gives you specific legal rights, and you may also have other rights, which vary from state to state.

Empire Comfort Systems Inc.
918 Freeburg Ave. Belleville, IL 62220

If you have a general question about our products, please e-mail us at info@empirecomfort.com.
If you have a service or repair question, please contact your dealer.

www.empirecomfort.com