This Owner's Manual is provided and hosted by Appliance Factory Parts.

Appliance Factory Parts
Experts in BBQ, Humidifier, & Appliance Parts
1-800-955-7075

EMPIRE HB10TN-1
Owner's Manual

Shop genuine replacement parts for EMPIRE HB10TN-1

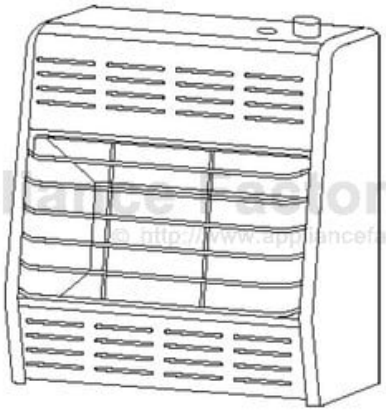

Find Your EMPIRE Fireplace Parts - Select From 642 Models

-------- Manual continues below --------

HearthRite

BLUE FLAME VENT-FREE NATURAL GAS SPACE HEATER

OWNER'S OPERATION AND INSTALLATION MANUAL

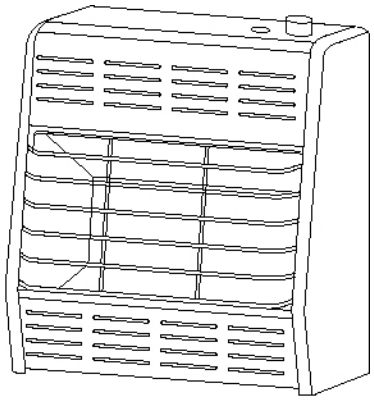

HB06MN-1 HB10MN-1 HB10TN-1

Table of Contents

Important Safety Information.....2
Product Features.....3
Proper Ventilation & Fresh Air.....4
Installation.....6
Operating Your Heater.....10
Cleaning & Maintenance.....13
Trouble Shooting.....14
Specifications.....17
Parts List.....19
Warranty Information.....24

⚠ **WARNING:** If the information in this manual is not followed exactly, a fire or explosion may result causing property damage, personal injury, or loss of life.

⚠ **WARNING:** This is an unvented gas-fired heater. It uses air (oxygen) from the room in which it is installed. Provisions for adequate combustion and ventilation air must be provided. Refer to Air For Combustion and Ventilation section on page 4 of this manual.

HearthRite
A Division of Empire Comfort Systems,Inc.
918 Freeburg Avenue
Belleville,IL 62220
Phone : 618-233-7420 or 1-800-851-3153
Fax : 618-233-7097 or 1-800-443-8648
www.hearthrite.com

Do not store, or use gasoline or other flammable vapors and liquids in the vicinity of this or any other appliance.

WHAT TO DO IF YOU SMELL GAS

- Do not try to light any appliance.
- Do not touch any electrical switch; do not use any phone in your building.
- Immediately call your gas supplier from a neighbor's phone. Follow the gas supplier's instructions.
- If you cannot reach your gas supplier, call the fire department.

Installation and service must be performed by a qualified installer, service agency or gas supplier.

WARNING: Improper installation, adjustment, alteration, service or maintenance can cause injury or property damage. Refer to this manual for correct installation and operational procedures. For assistance or additional information consult a qualified installer, service agency, or gas supplier.

This appliance may be installed in an aftermarket* permanently located, manufactured (mobile) home, where not prohibited by local codes.
This appliance is only for use with the type of gas indicated on the rating plate. This appliance is not convertible for use with other gases.

*Aftermarket: Completion of sale, not for purpose of resale, from the manufacturer.

WATER VAPOR: A BY-PRODUCT OF UNVENTED ROOM HEATERS
Water vapor is a by-product of gas combustion. An unvented room heater produces approximately one (1) ounce (30ml) of water for every 1,000 BTU's (.3KW's) of gas input per hour. Refer to page 3.

Installer: Please leave these instructions with the consumer.

Consumer: Please retain these instructions for future use.

IMPORTANT SAFETY INFORMATION

⚠ WARNINGS

⚠ **IMPORTANT:** Read this owner's manual carefully and completely before trying to assemble, operate, or service this heater. Improper use of this heater can cause serious injury or death from burns, fire, explosion, electrical shock, and carbon monoxide poisoning.

⚠ **WARNING:** Do not use any accessory not approved for use with this heater.

⚠ **WARNING:** Any change to this heater or its controls can be dangerous.

Do not place clothing or other flammable material on or near the appliance. Never place any objects on the heater.

Due to high temperatures, heater should be kept out of traffic and away from furniture and draperies.

Surface of heater becomes very hot when running heater. Keep children and adults away from hot surface to avoid burns or clothing ignition. Heater will remain hot for a time after shut down. Allow surface to cool before touching.

Carefully supervise young children when they are in the same room with heater.

Make sure grill guard is in place before running heater.

Keep the appliance area clear and free from combustible materials, gasoline, and other flammable vapors and liquids.

1. This appliance is only for use with the type of gas indicated on the rating plate. This appliance is not convertible for use with other gases.
2. If you smell gas
   - Shut off gas supply.
   - Do not try to light any appliance.
   - Do not touch any electrical switch, do not use any phone in your building.
   - Immediately call your gas supplier from a neighbor's phone. Follow the gas supplier's instructions.
   - If you cannot reach your gas supplier, call the fire department.
3. This heater needs fresh, outside air ventilation to run properly. This heater has an Oxygen Depletion Sensor (ODS) safety shutoff system. The ODS shuts down the heater if not enough fresh air is available. See *Fresh Air For Combustion And Ventilation* pages 4 through 6.
4. Keep all air openings in the front and bottom of heater clear and free of debris. This will insure enough air for proper combustion.
5. If heater shuts off. Do not relight until you provide fresh outside air. If heater keeps shutting off, have it serviced.
6. Do not operate heater
   - where flammable liquids or vapors are used or stored
   - under dusty conditions
7. Turn heater off before using furniture polish, wax, carpet cleaner, or similar products, If heated, the vapors from these products may create a white powder residue within burner box or on adjacent walls or furniture.
8. Do not use heater if any part has been under water. Immediately call a qualified service technician to inspect the room heater and to replace any part of the control system and any gas control which has been under water.
9. Turn off heater and let cool before servicing. Only a qualified service person should service and repair heater.
10. Operating heater above elevations of 4,500 feet could cause pilot outage.
11. Do not install in a bathroom except model HB06MN.

⚠ **DANGER:** Carbon monoxide poisoning may lead to death!

Carbon Monoxide Poisoning: Early signs of carbon monoxide poisoning resemble the flu with headaches, dizziness, or nausea. If you have these signs, the heater may not be working properly. **Get fresh air at once!** Have heater serviced. Some people are more affected by carbon monoxide than others. These include pregnant women, persons with heart or lung disease or anemia, those under the influence of alcohol, and those at high altitudes.

Natural Gas: Natural gas is odorless. An odor-making agent is added to natural gas. The odor helps you detect a natural gas leak . However, the odor added to natural gas can fade. Natural gas may be present even though no odor exists. Make certain you read and understand all warnings. Keep this manual for reference. It is your guide to safe and proper operation of this heater.

PRODUCT FEATURES

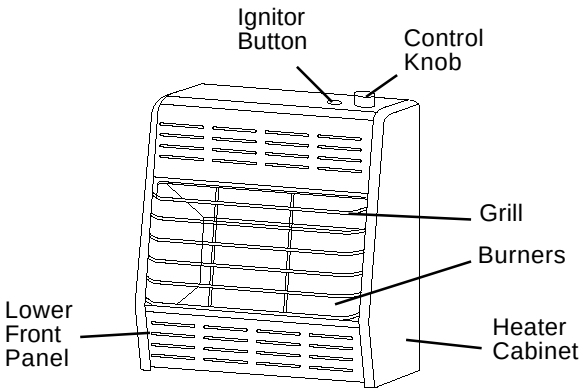

Figure1-Vent-Free Natural Gas Heater

SAFETY DEVICE

A standard requirement for all vent-free room heaters. This heater has a pilot with an Oxygen Depletion Sensor(ODS) safety shutoff system. The ODS/pilot shuts off the heater if there is not enough fresh air.

PIEZO IGNITION SYSTEM

This heater is equipped with a piezo ignitor. This system requires no matches, batteries, or other sources to light heater.

THERMOSTATIC HEAT CONTROL ON THERMOSTAT MODELS

These heaters have a control valve with a thermostat sensing bulb. This results in the greatest heater comfort and may result in lower gas bills.

LOCAL CODES

Install and use heater with care. Follow all local codes. In the absence of local codes, use the latest edition of *National Fuel Gas Code ANSZ223.1*, also known as NFPA 54*.

*Available from :

American National Standards Institute, Inc.
1430 Broadway
New York, NY 10018

National Fire Protection Association, Inc.
Batterymarch Park
Quincy, MA 02269

QUALIFIED INSTALLING AGENCY

Installation and replacement of gas piping, gas utilization equipment or accessories and repair and servicing of equipment shall be performed only by a qualified agency. The term “qualified agency” means any individual, firm, corporation, or company that either in person or through a representative is engaged in and is responsible for (a) the installation, testing, or replacement of gas piping or (b) the connection, installation, testing, repair, or servicing of equipment; that is experienced in such work; that is familiar with all precautions required, and that has complied with all the requirements of the authority having jurisdiction.

State of Massachusetts: The installation must be made by a licensed plumber or gas fitter in the Commonwealth of Massachusetts.
Sellers of unvented propane or natural gas-fired supplemental room heaters shall provide to each purchaser a copy of 527 CMR 30 upon sale of the unit.
In the state of Massachusetts, unvented propane or nature gas-fired space heaters shall be prohibited in bedrooms and bathrooms.

UNPACKING

1. Remove heater from carton.
2. Remove all protective packaging applied to heater for shipment.
3. Check heater for any shipping damage. If heater is damaged. promptly inform dealer where you bought heater.

WATER VAPOR: A BY-PRODUCT OF UNVENTED ROOM HEATERS

Water vapor is a by-product of gas combustion. An unvented room heater produces approximately one (1) ounce (30ml) of water for every 1,000 BTU’s (.3KW’s) of gas input per hour.
Unvented room heaters are recommended as supplemental heat (a room) rather than a primary heat source (an entire house). In most supplemental heat applications, the water vapor does not create a problem. In most applications, the water vapor enhances the low humidity atmosphere experienced during cold weather.

The following steps will help insure that water vapor does not become a problem.
1. Be sure the heater is sized properly for the application, including ample combustion air and circulation air.
2. If high humidity is experienced, a dehumidifier may be used to help lower the water vapor content of the air.
3. Do not use an unvented room heater as the primary heat source.

FRESH AIR FOR COMBUSTION AND VENTILATION

⚠ **WARNING:** This heater shall not be installed in a confined space or unusually tight construction unless provisions are provided for adequate combustion and ventilation air. Read the following instructions to insure proper fresh air for this and other fuel-burning appliances in your home.

PROVIDING ADEQUATE VENTILATION

The following are excerpts from *National Fuel Gas Code. NFPA 54/ANS Z223.1, Section 5.3.* Air for Combustion and Ventilation. All spaces in homes fall into one of the three following ventilation classifications:

1. Unusually Tight Construction
2. Unconfined Space
3. Confined Space

The information on pages 4 through 6 will help you classify your space and provide adequate ventilation.

Unusually Tight Construction

The air that leaks around doors and windows may provide enough fresh air for combustion and ventilation. However, in buildings of unusually tight construction. you must provide additional fresh air.

Unusually tight construction is defined as construction where:

a. walls and ceilings exposed to the outside atmosphere have a continuous water vapor retarder with a rating of one perm (6×10^{-11} kg per pa-sec-m^2) or less with openings gasketed or sealed and

b. weather stripping has been added on openable windows and doors *and*

c. caulking or sealants are applied to areas such as joints around window and door frames, between sole plates and floors, between wall-ceiling joints, between wall panels, at penetrations for plumbing, electrical, and gas lines, and at other openings. **If your home meets all of the three criteria above, you must provide additional fresh air.** ***See Ventilation Air From Outdoors, page 6.***

If your home does not meet all of the three criteria above *see Determining Fresh-Air Flow for Heater Location, page 5.*

Confined and Unconfined Space

The National Fuel Gas Code ANS Z223.1 defines a confined space as a space whose volume is less than 50 cubic feet per 1,000 Btu per hour (4.8 m^3 per kw) of the aggregate input rating of all appliances installed in that space and an unconfined space as a space whose volume is not less than 50 cubic feet per 1,000 Btu per hour (4.8 m^3 per kw) of the aggregate input rating of all appliances installed in that space. Rooms communicating directly with the space in which the appliances are installed*, through openings not furnished with doors, are considered a part of the unconfined space.

This heater shall not be installed in a confined space or unusually tight construction unless provisions are provided for adequate combustion and ventilation air.

* Adjoining rooms are communicating only if there are doorless passageways or ventilation grills between them.

DETERMINING FRESH-AIR FLOW FOR HEATER LOCATION

Determining if you have a Confined or Unconfined Space*

Use this worksheet to determine if you have a confined or unconfined space.

Space: Includes the room in which you will install heater plus any adjoining rooms with doorless passageways or ventilation grills between the rooms.

1. Determine the volume of the space (length×width×height).
   Length×Width×Height=_____cu.ft. (volume of space)
   Example: Space size 18ft. (length)×16ft.(width)×8ft. (ceiling height)=2304cu. ft. (volume of space)
   If additional ventilation to adjoining room is supplied with grills or openings, add the volume of these rooms to the total volume of the space.
2. Divide the space volume by 50 cubic feet to determine the maximum Btu/Hr the space can support.
   _____(volume of space)÷50 cu. ft.=(Maximum Btu/Hr the space can support)

Example: 2304 cu. ft. (volume of space)÷50 cu.ft.=46.1 or 46.100(maximum Btu/Hr the space can support)

⚠ **WARNING:** If the area in which the heater may be operated is smaller than that defined as an unconfined space or if the building is of unusually tight construction, provide adequate combustion and ventilation air by one of the methods described in the National Fuel Gas Code, ANS Z223.1, Section 5.3 or applicable local codes.

3. Add the Btu/Hr of all fuel burning appliances in the space.

Vent-free heater	_____	Btu/Hr
Gas water heater*	_____	Btu/Hr
Gas furnace	_____	Btu/Hr
Vented gas heater	_____	Btu/Hr
Gas Fireplace logs	_____	Btu/Hr
Other gas appliances* +	_____	Btu/Hr
Total =	_____	Btu/Hr

Example:

Gas water heater		44,000	Btu/Hr
Vent free heater	+	10,000	Btu/Hr
Total	=	54,000	Btu/Hr

*Do not include direct-vent gas appliances. Direct-vent draws combustion air from the outdoors and vents to the outdoors.

4. Compare the maximum Btu/Hr the space can support with the actual amount of Btu/Hr used.

_____ Btu/Hr (maximum the space can support)

_____ Btu/Hr (actual amount of Btu/Hr used)

Example : 46,080 Btu/Hr(maximum the space can support)
54,000 Btu/Hr(actual amount of Btu/Hr used)

The space in the above example is a confined space because the actual Btu/Hr used is more than the maximum Btu/Hr the space can support.

You must provide additional fresh are. Your options are as follows:

A. Rework worksheet, adding the space of an adjoining room. If the extra space provides an unconfined space, remove door to adjoining room or add ventilation grills between rooms. See *Ventilation Air From inside Building*, page 5.

B. Vent room directly to the outdoors. See *Ventilation Air From Outdoors*, page 6 .

C. Install a lower Btu/Hr heater, if lower Btu/Hr size makes room unconfined.

If the actual Btu/Hr used is less than the maximum Btu/Hr the space can support, the space is an unconfined space. You will need no additional fresh air ventilation.

AIR FOR COMBUSTION AND VENTILATION

Continued

VENTILATION AIR

Ventilation Air From Inside Building

This fresh air would come from an adjoining unconfined space. When ventilating to an adjoining unconfined space, you must provide two permanent openings: one within 12" of the ceiling and one within 12" of the floor on the wall connecting the two spaces (see options 1 and 2, Figure 2). You can also remove door into adjoining room (see option 3, Figure 2). *Follow the National Fuel Gas Code NFPA 54/ANS Z223.1. Section 5.3, Air for Combustion and Ventilation* for required size of ventilation grills or ducts

⚠WARNING: Rework worksheet, adding the space of the adjoining unconfined space. The combined spaces must have enough fresh air to supply all appliances in both spaces.

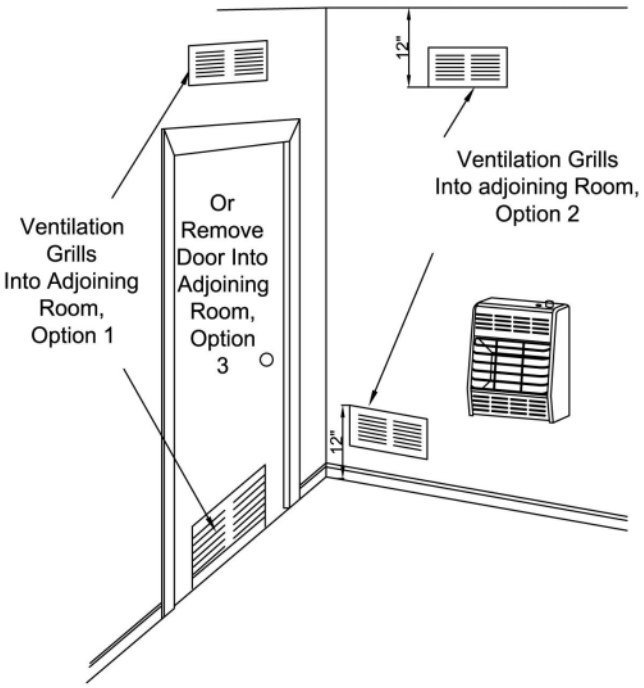

Figure 2 -Ventilation Air from Inside Building

VENTILATION AIR

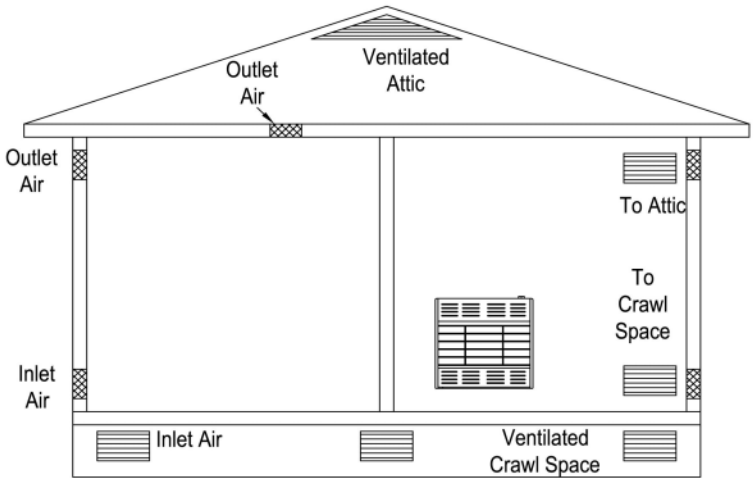

Figure 3 -Ventilation Air from Outdoors

Ventilation Air From Outdoors

Provide extra fresh air by using ventilation grills or ducts: You must provide two permanent openings: one within 12" of the ceiling and one within 12" of the floor.

Connect these items directly to the outdoors or spaces open to the outdoors. These spaces include attics and crawl spaces. Follow the *National Fuel Gas Code NFPA 54/ANS Z223.1, Section 5.3. Air for Combustion and Ventilation* for required size of ventilation grills or ducts.

IMPORTANT: Do not provide openings for inlet or outlet air into attic if attic has a thermostat-controlled power vent. Heated air entering the attic will activate the power vent.

INSTALLATION

⚠ **NOTICE:** This heater is intended for use as supplemental heat. Use this heater along with your primary heating system. Do not install this heater as your primary heat source. If you have a central heating system, you may run system's circulating blower while using heater. This will help circulate the heat throughout the house. In the event of a power outage, you can use this heater as your primary heat source.

⚠ **WARNING:** A qualified service person must install heater. Follow all local codes.

CHECK GAS TYPE

Use only natural gas. If your gas supply is not natural, do not install heater. Call dealer where you bought heater for proper type heater.

INSTALLATION NEEDS

Before installing heater, make sure you have the items listed below:

- piping (check local codes)
- sealant (resistant to natural gas)
- equipment shutoff valve*
- ground joint union
- test gauge connection*
- sediment trap
- tee joint
- pipe wrench

*A CSA/AGA design-certified equipment shutoff valve with 1/8" NPT tap is an acceptable alternative to test gauge connection. Purchase the CSA/AGA design certified equipment shutoff valve from your dealer.

LOCATING HEATER

This heater is designed to be mounted on a wall. For convenience and efficiency, install heater

- where there is easy access for operation, inspection, and service
- in coldest part of room

CAUTION: If you install the heater in a home garage

- heater pilot and burner must be at least 18 inches above floor.
- locate heater where moving vehicle will not hit it.

⚠ **WARNING:** Never install the heater

- in a bathroom (Models HB10MN and HB10TN, only HB06MN is allowed in bathroom. Check local codes.)
- in a recreational vehicle.
- where curtains, furniture, clothing, or other flammable objects are less than 36 inches from the front, top, or sides of the heater.
- as a fireplace insert.
- in high traffic areas.
- in windy or drafty areas.

When the HB06MN is installed in bathrooms,do not use flammable products such as aerosol hair spray, foot spary or any product that contains flammable vapors and keep towels away from heater.(only HB06MN is allowed in a bathroom.)

⚠ **CAUTION:** This heater creates warm air currents.These currents move heat to wall surfaces next to heater. Installing heater next to vinyl or cloth wall coverings or operating heater where impurities (such as tobacco smoke, aromatic candles, cleaning fluids, oil or kerosene lamps, etc.) in the air exist may discolor walls.

INSTALLATION

WARNING: Maintain the minimum clearances shown in Figure 4. If you can, provide greater clearances from floor, ceiling, and joining wall.

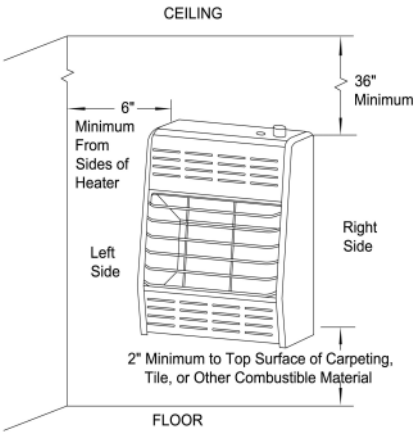

Figure 4 -Mounting clearances As View From Front of Heater

INSTALLING THERMOSTAT SENSING BULB

For T-Stat Model Only

1. Pull out the sensing bulb from the two clips located in the shippng position according to the direction as shown by the arrow. There is no need to take out the two bulb clips.
2. Take out the bulb clip from the hardware package and insert it into the square hole and then insert the sensing bulb into the bulb clip (see Figure 5).

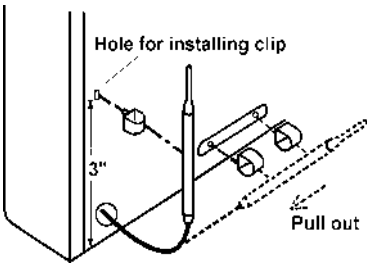

Figure 5 -Moving Thermostat Sensing Bulb

FASTENING HEATER TO WALL

Mounting Bracket

The mounting bracket is located on back panel of heater (see Figure 6). It has been taped there for shipping. Remove mounting bracket from back panel.

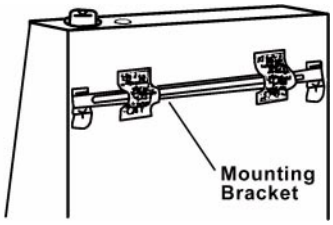

Figure 6 -Mounting Bracket Location

Removing Lower Front Panel Of Heater

1. Remove two Screws near bottom corners of lower front panel.
2. Pull bottom of lower front panel forward, then down (see Figure 7).

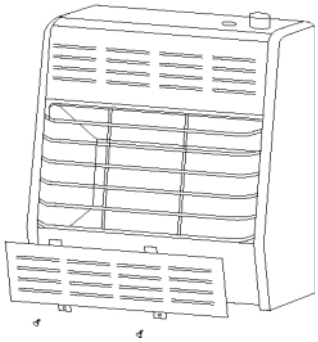

Figure 7 - Removing Lower Front Panel Of Heater

Methods For Attaching Mounting Bracket To Wall

Only use last hole on each end of mounting bracket to attach bracket to wall. Attach mounting bracket to wall only in one of two ways:

1. Attaching to wall stud
2. Attaching to wall anchor

Attaching to Wall Stud: This method provides the strongest hold. Insert mounting screws through mounting bracket and into wall studs.

Attaching to Wall Anchor: This method allows you to attach mounting bracket to hollow walls (wall areas between studs) or to solid walls (concrete or masonry).

Decide which method better suits your needs. Either method will provide a secure hold for the mounting bracket.

Marking Screw Locations

1. Tape mounting bracket to wall where heater will be located. Make sure mounting bracket is level.

WARNING: Maintain minimum clearances shown in Figure 4. If you can, provide greater clearances from floor and joining wall.

2. Mark screw locations on wall. (see Figure 8)

Note: Only mark last hole on each end of mounting bracket. Insert mounting screws through these holes only.

3. Remove tape and mounting bracket from wall.

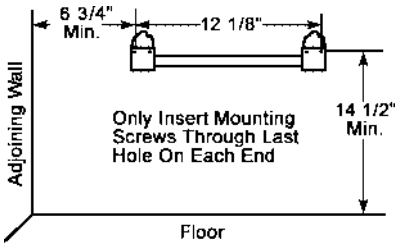

Figure 8 - Mounting Bracket Clearances

INSTALLATION

Attaching Mounting Bracket To Wall

Note: Wall anchors, mounting screws, and spacers are in hardware package. The hardware package is provided with heater.

Attaching to Wall Stud Method

For attaching mounting bracket to wall studs

1. Drill holes at marked locations using 9/64" drill bit.
2. Place mounting bracket onto wall. Line up last hole on each end of bracket with holes drilled in wall.
3. Insert mounting screws through bracket and into wall studs.
4. Tighten screws until mounting bracket is firmly fastened to wall studs.

Attaching to Wall Anchor Method

For attaching mounting bracket to hollow walls (wall areas between studs) or solid walls (concrete or masonry)

1. Drill holes at marked locations using 5/16" drill bit. For solid walls (concrete or masonry), drill at least 1" deep.
2. Fold wall anchor as shown in Figure 9 below.

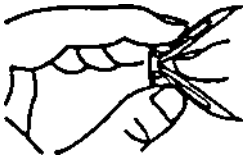

Figure 9 - Folding Anchor

3. Insert wall anchor (wings first) into hole. Tap anchor flush to wall.
4. For thin walls (1/2" or less), insert red key into wall anchor. Push red key to "pop" open anchor wings. (see Figure 10)

⚠ IMPORTANT: Do not hammer key! For thick walls (over 1/2" thick) or solid walls, do not pop open wings.

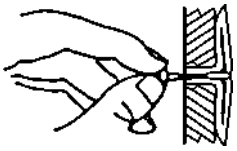

Figure 10 - Popping Open Anchor Wing For Thin Walls

5. Place mounting bracket onto wall. Line up last hole on each end of bracket with wall anchors.
6. Insert mounting screws through bracket and into wall anchors.
7. Tighten screws until mounting bracket is firmly fastened to wall.

Placing Heater On Mounting Bracket

1. Locate two horizontal slots on back panel of heater (see Figure 11).
2. Place heater onto mounting bracket. Slide horizontal slots onto stand-out tabs on mounting bracket.

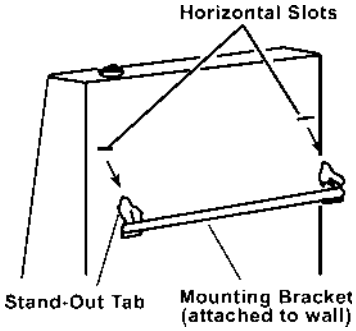

Figure 11 - Mounting Heater Onto Mounting Mracket

Installing Bottom Mounting Screw

1. Locate bottom mounting hole. This hole is near bottom on back panel of heater (see Figure 12).

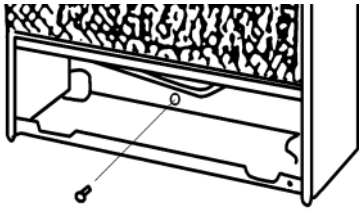

Figure 12 - Installing Bottom Mounting Screw

2. Mark screw locations on wall.
3. Remove heater from mounting bracket.
4. If installing bottom mounting screw into hollow or solid wall, install wall anchors. Follow steps 1 through 4 under Attaching To Wall Anchor Method. If installing bottom mounting screw into wall stud, drill hole at marked locations using 9/64" drill bit.
5. Replace heater onto mounting bracket.
6. Place spacer between bottom mounting holes and wallanchor or drilled hole.
7. Hold spacer in place with one hand. With other hand, insert mounting screw through bottom mounting hole and spacer. Place tip of screw in opening of wall anchor or drilled hole.
8. Tighten screw until heater is firmly secured to wall. Do not over tighten.

- Note: Do not replace lower front panel at this time. Replace lower front panel after making gas connections and checking for leaks (see page 9).

INSTALLATION

CONNECTING TO GAS SUPPLY

WARNING: A qualified service person must connect heater gas supply. Follow all local codes.

WARNING: This appliance requires a 3/8" NPT (National Pipe Thread) inlet connection to the pressure regulator.

WARNING: Never connect heater to private (non-utility) gas well. This gas is commonly known as well-head gas.

IMPORTANT: Check your gas line pressure before connecting heater to gas line. Gas line pressure must be no greater than 10.5 inches of water. If gas line pressure is higher, heater regulator damage could occur.

CAUTION: Use only new, black iron or steel pipe. Internally-tinned copper tubing may be used in certain areas. Check your local codes. Use pipe of large enough diameter to allow proper gas volume to heater. If pipe is too small, undue loss of pressure will occur.

Typical Inlet Pipe Diameters
All models up to 20,000 BTU's use 3/8'' or greater pipe;
All models 25,000 BTU's and higher, use 1/2" or greater pipe.

Installation must include an equipment shutoff valve, union, and plugged 1/8" NPT tap. Locate NPT tap within reach for test gauge hook up. NPT tap must be up stream from heater (see Figure 13).

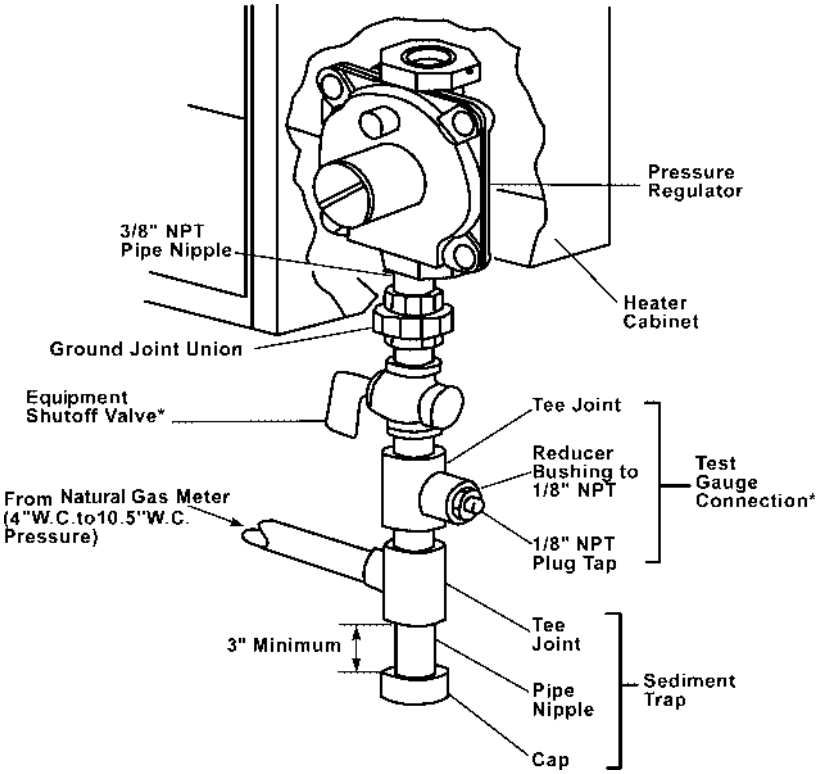

Figure 13 -Gas Connection

*A CSA/AGA design-certified equipment shutoff valve with 1/8" NPT tap is an acceptable alternative to test gauge connection. Purchase the CSA/AGA design-certified equipment shutoff valve from your dealer.

IMPORTANT: Install an equipment shutoff valve in an accessible location. The equipment shutoff valve is for turning on or shutting off the gas to the appliance.

Apply pipe joint sealant lightly to male threads. This will prevent excess sealant from going into pipe. Excess sealant in pipe could result in clogged heater valves.

CAUTION: Use pipe joint sealant that is resistant to natural gas.

Install sediment trap in supply line as shown in Figure 13. Locate sediment trap where it is within reach for cleaning. Locate sediment trap where trapped matter is not likely to freeze. A sediment trap traps moisture and contaminants. This keeps them from going into heater controls. If sediment trap is not installed or is installed wrong, heater may not run properly.

***IMPORTANT*:** Hold pressure regulator with wrench when connecting it to gas piping and/or fittings.

CHECKING GAS CONNECTIONS

WARNING: Test all gas piping and connections for leaks after installing or servicing. Correct all leaks at once.

WARNING: Never use an open flame to check for a leak. Apply a mixture of liquid soap and water to all joints. Bubbles forming show a leak. Correct all leaks at once.

Pressure Testing Gas Supply Piping System

Test Pressures In Excess Of 1/2 PSIG (3.5 K Pa)

1. Disconnect appliance with its appliance main gas valve (control valve) and equipment shutoff valve from gas supply piping system. Pressures in excess of 1/2 psig will damage heater regulator.
2. Cap off open end of gas pipe where equipment shutoff valve was connected.
3. Pressurize supply piping system by either using compressed air or opening main gas valve located on or near gas meter.
4. Check all joints of gas supply piping system. Apply mixture of liquid soap and water to gas joints. Bubbles forming show a leak.
5. Correct all leaks at once.
6. Reconnect heater and equipment shutoff valve to gas supply. Check reconnected fittings for leaks.

Test Pressures Equal To or Less Than 1/2 PSIG (3.5 K Pa)

1. Close equipment shutoff valve (see Figure 14).
2. Pressurize supply piping system by either using compressed air or opening main gas valve located on or near gas meter.
3. Check all joints from gas meter to equipment shutoff valve (see Figure 15).Apply mixture of liquid soap and water to gas joints. Bubbles forming show a leak.
4. Correct all leaks at once.

Pressure Testing Heater Gas Connections

1. Open equipment shutoff valve (see Figure 14).
2. Open main gas valve located on or near gas meter.
3. Make sure control knob of heater is in the OFF position.
4. Check all joints from equipment shutoff valve to control valve (see Figure 15). Apply mixture of liquid soap and water to gas joints. Bubbles forming show a leak.
5. Correct all leaks at once.
6. Light heater (see Operating Heater, pages 10 and 11 for non-thermostat models or page 12 for thermostat model).Check the rest of the internal joints for leaks.
7. Turn off heater (see To Turn Off Gas to Appliance, page 11 for non-thermostat models or page 12 for thermostat model).
8. Replace lower front panel.

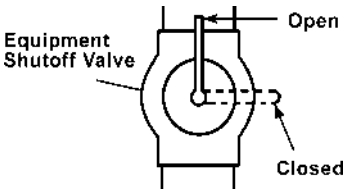

Figure 14 -Equipment Shutoff Valve

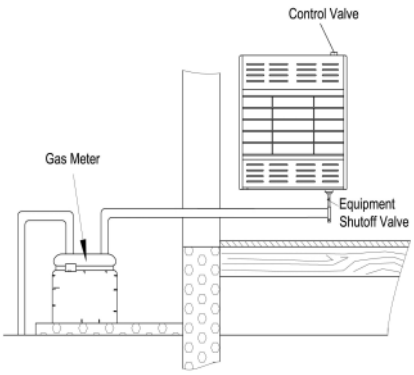

Figure 15 -Checking Gas Joints

In the State of Massachusetts the gas cock must be a T handle type. The State of Massachusetts requires that a flexible appliance connector cannot exceed three feet in length.

NON-THERMOSTAT MODEL

■FOR YOUR SAFETY■
READ BEFORE LIGHTING

WARNING: If you do not follow these instructions exactly, a fire or explosion may result causing property damage, personal injury or loss of life.

A. When lighting the pilot, follow , these instructions exactly.

B. BEFORE LIGHTING smell all around the appliance area for gas. Be sure to smell next to the floor because some gas is heavier than air and will settle on the floor .

WHAT TO DO IF YOU SMELL GAS

- Do not try to light any appliance.
- Do not touch any electric switch; do not use any phone in your building.
- Immediately call your gas supplier from a neighbor's phone. Follow the gas supplier's instructions.
- If you cannot reach your gas supplier, call the fire department.

C. Use only your hand to push in or turn the gas control knob. Never use tools. If the knob will not push in or turn by hand, don't try to repair it, call a qualified service technician or gas supplier. Force or attempted repair may result in a fire or explosion.

D. Do not use this appliance if any part has been under water. Immediately call a qualified service technician to inspect the appliance and to replace any part of the control system and any gas control which has been under water.

OPERATING YOUR HEATER

Manual Control Models
■LIGHTING■ INSTRUCTIONS

1. STOP! Read the safety information on the side of heater.
2. Check that gas supply to heater is on.
3. Push in gas control knob slightly and turn clockwise ↷ to the OFF position.
4. Wait five (5) minutes to clear out any air. Then smell for gas, including near the floor. If you smell gas, STOP! Follow "B" in the safety information on the side of the heater. If you do not smell gas, go to the next step.
5. Push in gas control knob slightly and turn counterclockwise ↶ to "PILOT/IGN" and depress for five(5) seconds

***NOTE*:** The first time that the heater is operated after connecting the gas supply , the control knob should be depressed for about thirty (30) seconds. This will allow air to bleed from the gas system.

6. With control knob pressed in, push down and release the ignitor button. This will light pilot. If needed, keep pressing ignitor button until pilot lights.
7. Keep control knob depressed for ten (10) seconds after lighting pilot. If pilot goes out, repeat steps 5,6 and 7.
8. To select the desired heating level, partially press down the control knob slightly and rotate counterclockwise ↶. Release the downward pressure on the knob while continuing to turn until the knob locks at the desired setting position. Do not operate between locked positions.

- Set control knob to desired heating position.

  NOTE: Both HIGH and LOW are locked positions. You must press in control knob before turning it from these positions.

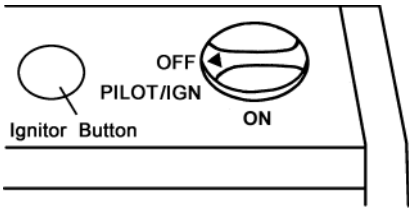

Figure 16 -1- Control Knob In The OFF Position (HB06MN)

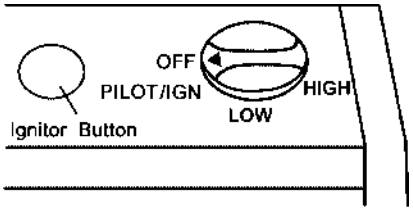

Figure 16-2 - Control Knob in The OFF Position (HB10MN)

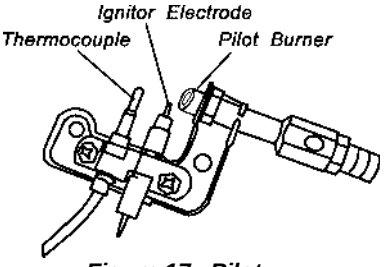

Figure 17 - Pilot

> ⚠ **CAUTION:** Do not try to adjust heating levels by using the equipment shutoff valve.

■TO TURN OFF■ GAS TO APPLIANCE

Shutting Off Heater

1. Turn control knob clockwise ↷ to the OFF position.
2. Turn off all electric power to the appliance if service is to be performed.

Shutting Off Burner Only (Pilot Stays Lit)

Turn control knob clockwise ↷ to the PILOT/IGN position.

■MANUAL LIGHTING■ PROCEDURE

1. Remove lower front panel(see Figure 7 page 7).
2. Follow steps 1 through 5 under *Lighting Instructions.*
3. With control knob pressed in, strike match. Hold match to pilot until pilot lights.
4. Keep control knob pressed in for 30 seconds after lighting pilot. After 30 seconds, release control knob. Follow step 8 under *Lighting Instructions.*
5. Replace lower front panel.

OPERATING YOUR HEATER

THERMOSTAT MODEL

■FOR YOUR SAFETY■
READ BEFORE LIGHTING

⚠ **WARNING:** If you do not follow these instructions exactly, a fire or explosion may result causing property damage, personal injury or loss of life.

A. When lighting the pilot, follow these instructions exactly.

B. BEFORE LIGHTING smell all around the appliance area for gas. Be sure to smell next to the floor because some gas is heavier than air and will settle on the floor.

WHAT TO DO IF YOU SMELL GAS

- Do not try to light any appliance.
- Do not touch any electric switch, do not use any phone in your building.
- Immediately call your gas supplier from a neighbor's phone. Follow the gas supplier's instructions.
- If you cannot reach your gas supplier, call the fire department.

C. Use only your hand to push in or turn the gas control knob. Never use tools. If the knob will not push in or turn by hand, don't try to repair it, call a qualified service technician or gas supplier. Force or attempted repair may result in a fire or explosion.

D. Do not use this appliance if any part has been under water. Immediately call a qualified service technician to inspect the appliance and to replace any part of the control system and any gas control which has been under water.

■LIGHTING■
INSTRUCTIONS

1. STOP! Read the safety information on the side of heater.
2. Make sure equipment shutoff valve is fully open.
3. Turn control knob clockwise ↷ to the OFF position.
4. Wait five(5) minutes to clear out any gas. Then smell for gas, including near the floor. If you smell gas, STOP! Follow "B" in the safety information on the side of heater. If you don't smell gas, go to the next step.
5. Turn control knob counterclockwise ↶ to the PILOT position. Press in control knob for five(5) seconds. (see Figure18).

   Note: You may be running this heater for the first time after hooking up to gas supply. If so, the control knob may need to be pressed in for 30 seconds. This will allow air to bleed from the gas system.

   - If control knob does not pop up when released, contact a qualified service person or gas supplier for repairs.
6. With control knob pressed in, push down and release ignitor button. This will light pilot. The pilot is attached to the front of burner. The pilot can be seen through the glass panel. If needed, keep pressing ignitor button until pilot lights.

Note: If pilot does not stay lit, refer to *Troubleshooting*, pages 14 through 16. Also contact a qualified service person or gas supplier for repairs. Until repairs are made, light pilot with match.To light pilot with match, see *Manual Lighting Procedure*.

7. Keep control knob pressed in for 30 seconds after lighting pilot. After 30 seconds, release control knob.
   - If control knob does not pop up when released, contact a qualified service person or gas supplier for repairs.

Note: If pilot goes out,repeat steps 3 through 7.This heater has a safety interlock system. Wait one(1) minute before lighting pilot again.

8. Turn control knob counterclockwise ↶ to desired heating level. The main burner should light. Set control knob to any heat level between HI and LO.

⚠ **CAUTION:** Do not try to adjust heating levels by using the equipment shutoff valve.

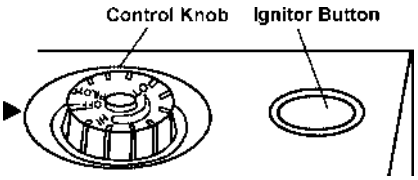

Figure 18 - Control Knob in The OFF Position (HB10TN)

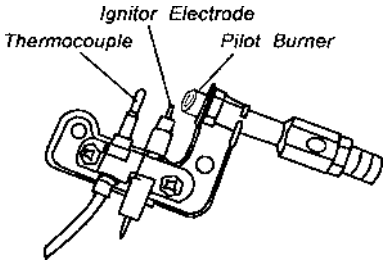

Figure 19 - Pilot

■THERMOSTAT CONTROL OPERATION■

The thermostatic control used on this model differs from standard thermostats.Standard thermostats simply turn on and off the burner. The thermostat used on this heater senses the room temperature. At times the room may exceed the set temperature. If so,the burner will shut off. The burner will cycle back on when room temperature drops below the set temperature. The control knob can be set to any comfort level between HI and LO.

Note: The thermostat sensing bulb measures the temperature of air near the heater cabinet.This may not always agree with room temperature(depending on housing construction, installation location, room size, open air temperatures,etc.) Frequent use of your heater will let you determine your own comfort levels.

■TO TURN OFF GAS■
TO APPLIANCE

Shutting Off Heater

1. Turn control knob clockwise ↷ to the OFF position.
2. Turn off all electric power to the appliance if service is to be performed.

Shutting Off Burner Only (pilot stays lit)

Turn control knob clockwise ↷ to the PILOT position.

OPERATING HEATER
Continued

■MANUAL LIGHTING■ PROCEDURE

1. Remove lower front panel (see Figure 7 page 7).
2. Follow steps through 5 under *Lighting Instructions* on page12.
3. With control knob pressed in, strike match. Hold match to pilot until pilot lights.
4. Keep control knob pressed in for 30 seconds after lighting pilot. After 30 seconds, release control knob. Follow step 8 under Lighting Instuctions on page 12.
5. Replace lower front panel.

■INSPECTING BURNER■

Check pilot flame pattern and burner flame pattern often.

PILOT FLAME PATTERN

Figure 20 shows a correct pilot flame pattern. Figure 21 shows an incorrect pilot flame pattern. The incorrect pilot flame is not touching thermocouple. This will cause the thermocouple to cool. When the thermocouple cools, the heater will shut down. If pilot flame pattern is incorrect, as shown in Figure 21.

- turn heater off (see To Turn Off Gas to Appliance on page 11 for non-thermostat models or page 12 for thermostat models.)
- see Troubleshooting. pages 14 through 16.

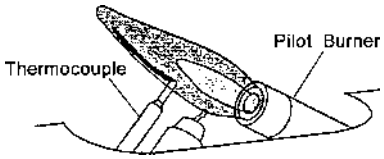

Figure 20 - Correct Pilot Flame Pattern

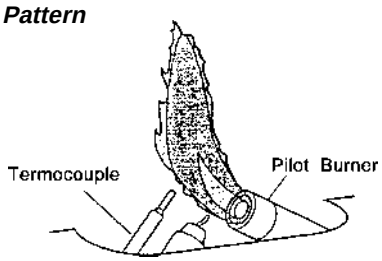

Figure 21 - Incorrect Pilot Flame Pattern

BURNER FLAME PATTERN

Figure 22 shows a correct burner flame pattern. Figure 23 shows an incorrect burner flame pattern. If burner flame pattern is incorrect, as shown in Figure 23.

> ⚠ **WARNING:** If yellow tipping occurs, your heater could produce increased levels of carbon monoxide. If burner flame pattern shows yellow tipping, follow instructions at bottom of this page.

> **Notice:** Do not mistake orange flames with yellow tipping. Dirt or other fine particles enter the heater and burn causing brief patches of orange flame.

- turn heater off (see To Turn Off Gas to Appliance pages10 & 11 for non-thermostat models and page 12 for thermostat models)
- see Troubleshooting. pages 14 through 16

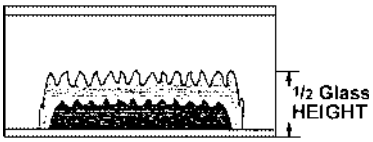

Figure 22 - Correct Burner Flame Pattern

Figure 23 - Incorrect Burner Flame Pattern

CLEANING AND MAINTENANCE

> ⚠ **WARNING:** Turn off heater and let cool before servicing.

> ⚠ **CAUTION:** You must keep control areas, burner, and circulating air passageways of heater clean. Inspect these areas of heater before each use. Have heater inspected yearly by a qualified service person. Heater may need more frequent cleaning due to excessive lint from carpeting, bedding material, pet hair, etc.

ODS/PILOT AND BURNER

- Use a vacuum cleaner, pressurized air or a small, soft bristled brush to clean.

CLEANING BURNER PILOT AIR INLET HOLE

We recommend that you clean the unit every 2,500 hours of operation or every three months. We also recommend that you keep the burner tube and pilot assembly clean and free of dust and dirt. To clean these parts we recommend using compressed air no greater than 30 PSI. Your local computer store, hardware store, or home center may carry compressed air in a can. You can use a vacuum cleaner in the blow position. If using compressed air in a can, please follow the directions on the can. If you don't follow directions on the can, you could damage the pilot assembly.

1. Shut off the unit, including the pilot. Allow the unit to cool for at least thirty minutes.
2. Inspect burner and pilot for dust and dirt.
3. Blow air through the ports/slots and holes in the burner.

Also clean the pilot assembly. A yellow tip on the pilot flame indicates dust and dirt in the pilot assembly. There is a small pilot air inlet hole about two inches from where the pilot flame comes out of the pilot assembly (see Figure 24). With the unit off, lightly blow air through the air inlet hole. You may blow through a drinking straw if compressed air is not available.

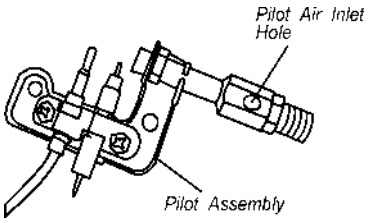

Figure 24 - Pilot Inlet Air Hole

CABINET

Air Passageways

- Use a vacuum cleaner or pressurized air to clean.

Exterior

- Use a soft cloth dampened with a mild soap and water mixture. Wipe the cabinet to remove dust.

TROUBLESHOOTING

Note **:** All troubleshooting items are listed in order of operation.

⚠ **WARNING:** Only a qualified service person should service and repair heater.

⚠ **CAUTION:** Never use a wire, needle, or similar object to clean ODS/pilot. This can damage ODS/pilot unit.

OBSERVED PROBLEM	POSSIBLE CAUSE	REMEDY
When ignitor button is pressed in, there is no spark at ODS/pilot.	1. Ignitor electrode is positioned wrong. 2. Ignitor electrode is broken. 3. Ignitor electrode is not connected to ignitor cable. 4. Ignitor cable is pinched or wet. 5. Broken ignitor cable. 6. Bad piezo ignitor.	1. Replace ignitor. 2. Replace ignitor. 3. Reconnect ignitor cable. 4. Free ignitor cable if pinched by any metal or tubing. Keep ignitor cable dry. 5. Replace ignitor cable. 6. Replace piezo ignitor.
When ignitor button is pressed in, there is a spark at ODS/pilot but no ignition.	1. Gas supply turned off or equipment shutoff valve is closed. 2. Control knob not fully pressed in while pressing ignitor button. 3. Air in gas lines when installed. 4. ODS/pilot is clogged. 5. Gas regulator setting is not correct 6. Control knob not in PILOT position.	1. Turn on gas supply or open equipment shutoff valve. 2. Fully press in control knob while pressing ignitor button. 3. Continue holding down control knob. Repeat igniting operation until air is removed. 4. Clean ODS/pilot (see Cleaning and Maintenance Page 13) or replace ODS/pilot assembly. 5. Replace gas regulator. 6. Turn control knob to PILOT position.
ODS/pilot lights but flame goes out when control knob is released.	1. Control knob is not fully pressed in. 2. Control knob is not pressed in long enough. 3. Equipment shutoff valve is not fully open. 4. Thermocouple connection is loose at control valve. 5. Thermocouple damaged. 6. Control valve damaged.	1. Press in control knob fully. 2. After ODS/pilot lights, keep control knob pressed in 30 seconds. 3. Fully open equipment shutoff valve. 4. Hand tighten until snug, then tighten 1/4 turn more. 5. Replace thermocouple. 6. Replace control valve.

TROUBLESHOOTING
Continued

OBSERVED PROBLEM	POSSIBLE CAUSE	REMEDY
Burner(s)does not light after ODS/pilot is lit.	1. Burner orifice is clogged. 2. Burner orifice diameter is too small. 3. Inlet gas pressure is too low.	1. Clean burner orifice (see Cleaning and Maintenance Page 13) or replace burner orifice. 2. Replace burner orifice. 3. Contact local natural gas company.
Delayed ignition of burner(s).	1. Manifold pressure is too low. 2. Burner orifice is clogged.	1. Contact local natural gas company. 2. Clean burner (see *Cleaning and Maintenance* Page 13) or replace burner orifice.
Burner backfiring during combustion.	1. Burner orifice is clogged or damaged. 2. Burner is damaged. 3. Gas regulator is defective.	1. Clean burner orifice (see Cleaning and Maintenance Page 13) or replace. 2. Replace burner. 3. Replace gas regulator.
Yellow flame during burner combustion.	1. Not enough air. 2. Gas regulator is defective. 3. Inlet gas pressure is too low .	1. Check burner for dirt and debris. If found, clean burner(see Cleaning And Maintenance Page 13). 2. Replace gas regulator. 3. Contact local natural gas company.
Slight smoke or odor during initial operation.	1. Residues from manufacturing processes	1. Problem will stop after a few hours of operation.
Heater produces a whistling noise when burner is lit.	1. Turning control knob to HI position when burner is cold. 2. Air in gas line. 3. Air passageways on heater blocked. 4. Dirty or partially clogged burner orifice.	1. Turn control knob to LO position and let warm up for a minute. 2. Operate burner until air is removed from line. Have gas line checked by local natural gas company. 3. Observe minimum installation clearances (see Figure 4, Page 7). 4. Clean burner (see *Cleaning and Maintenance* Page 13) or replace burner orifice.
Heater produces a clicking/ticking noise just after burner is lit or shut off.	1. Metal is expanding while heating or contracting while cooling.	1. This is common with most heaters. if noise is excessive, contact qualified service person.
White powder residue forming within burner box or on adjacent walls or furniture.	1. When heated the vapors from furniture polish, wax, carpet cleaners, etc. turn into white powder residue.	1. Turn heater off when using furniture polish, wax, carpet cleaner or similar products.

TROUBLESHOOTING

Continued

⚠ **WARNING:** If you smell gas

- Shut off gas supply.
- Do not try to light any appliance.
- Do not touch any electrical switch; do not use any phone in your building.
- Immediately call your gas supplier from a neighbor's phone. Follow the gas supplier's instructions.
- If you cannot reach your gas supplier, call the fire department.

***IMPORTANT*:** Operating heater where impurities in air exist may create odors. Cleaning supplies, paint, paint remover, cigarette smoke, cements and glues, new carpet ortextiles, etc., create fumes. These fumes may mix with combustion air and create odors.

OBSERVED PROBLEM	POSSIBLE CAUSE	REMEDY
Heater produces unwanted odors.	1. Heater is burning vapors from paint, hair spray, glues, etc. (See IMPORTANT statement above). 2. Gas leak. See Warning Statement at top of page.	1. Ventilate room. Stop using odor causing products while heater is running. 2. Locate and correct all leaks(see Checking Gas Connections, page 10).
Heater shuts off in use (ODS operates).	1. Not enough fresh air is available. 2. Low line pressure. 3. ODS/pilot is partially clogged.	1. Open window and/or door for ventilation. 2. Contact local natural gas company. 3. Clean ODS/pilot (see Cleaning page 12).
Gas odor exists even when control knob is in OFF position.	1. Gas leak. See Warning Statement at top of page. 2. Control valve is defective.	1. Locate and correct all leaks(see Checking Gas Connections, page 10). 2. Replace control valve.
Gas odor during combustion.	1. Foreign matter between control valve and burner. 2. Gas leak. See Warning Statement at top of page.	1. Take apart gas tubing and remove foreign matter. 2. Locate and correct all leaks (see Checking Gas Connections, page 10).
Moisture/condensation noticed on windows.	1. Not enough combustion/ventilation air.	1. Refer to Air for Combustion and Ventilation requirements, page 4.

SPECIFICATIONS

	HB06MN	HB10MN	HB10TN
Btu(available)	6,000	6,000/10,000	10,000
Gas Type	Natural Only	Natural Only	Natural Only
Ignition	Piezo	Piezo	Piezo
Pressure Regulator setting	3"W.C	3"W.C	3"W.C
Inlet Gas Pressure* (inches of water)			
Maximum	10.5"	10.5"	10.5"
Minimum	4"	4"	4"
Dimensions, Inches (HxWxD)			
Heater	19×14-1/4×7	19×14-1/4×7	19×14-1/4×7
Carton	22×16-3/4×8-1/8	22×16-3/4×8-1/8	22×16-3/4×8-1/8
Weight (pounds)			
Heater	12	13	14
Shipping	15	16	17

Note: Dimensions listed are outer most points on the heater (includes control knobs and grill).
* For purposes of input adjustment.

REPLACEMENT PARTS

Note: Use only original replacement parts. This will protect your warranty coverage for parts replaced under warranty.

PARTS UNDER WARRANTY

Contact authorized dealer from whom you purchased this product. If they are unable to supply original replacement part(s), call the number on the front of this manual. When contacting your dealer or HearthRite, have ready:

- your name
- your address
- model and serial numbers of your heater
- how heater was malfunctioning
- type of gas used (propane/LP or natural gas)
- purchase date
- warranty card

Usually, we will ask you to return the defective part to the factory.

PARTS NOT UNDER WARRANTY

Contact authorized dealers of this product. If they can't supply original replacement part(s), contact HearthRite at (800)851-3153.

TECHNICAL SERVICE

You may have further questions about installation, operation, or troubleshooting. If so, contact HearthRite at (800)851-3153.

SERVICE HINTS

When Gas Pressure Is Too Low

- Pilot will not stay lit
- Burner will have delayed ignition
- Heater will not produce specified heat

When Gas Quality Is Bad

- Pilot will not stay lit
- Burner will produce flames and soot
- Heater will backfire when lit

You may feel your gas pressure is too low or the gas quality is poor. If so, contact your local natural gas supplier.

ACCESSORIES

Purchase these heater accessories from your local dealer. If they can not supply these accessories, contact HearthRite for information. You can also write to the address listed on the front of this manual.

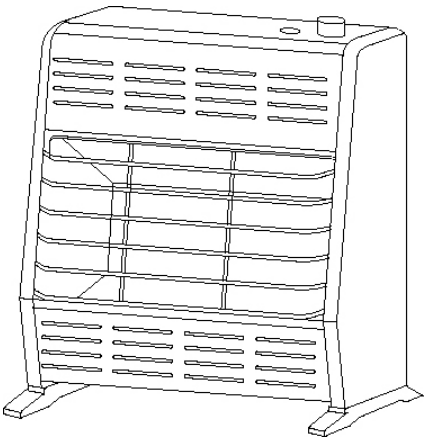

FLOOR MOUNTING STAND

For locating heater on the floor away from a wall. Complete installation instructions provided with floor mounting stand.

HearthRite

A Division of Empire Comfort Systems,Inc.
918 Freeburg Avenue
Belleville,IL 62220

Phone : 618-233-7420 or 1-800-851-3153
Fax : 618-233-7097 or 1-800-443-8648
www.hearthrite.com

ILLUSTRATED PARTS BREAKDOWN

HB06MN

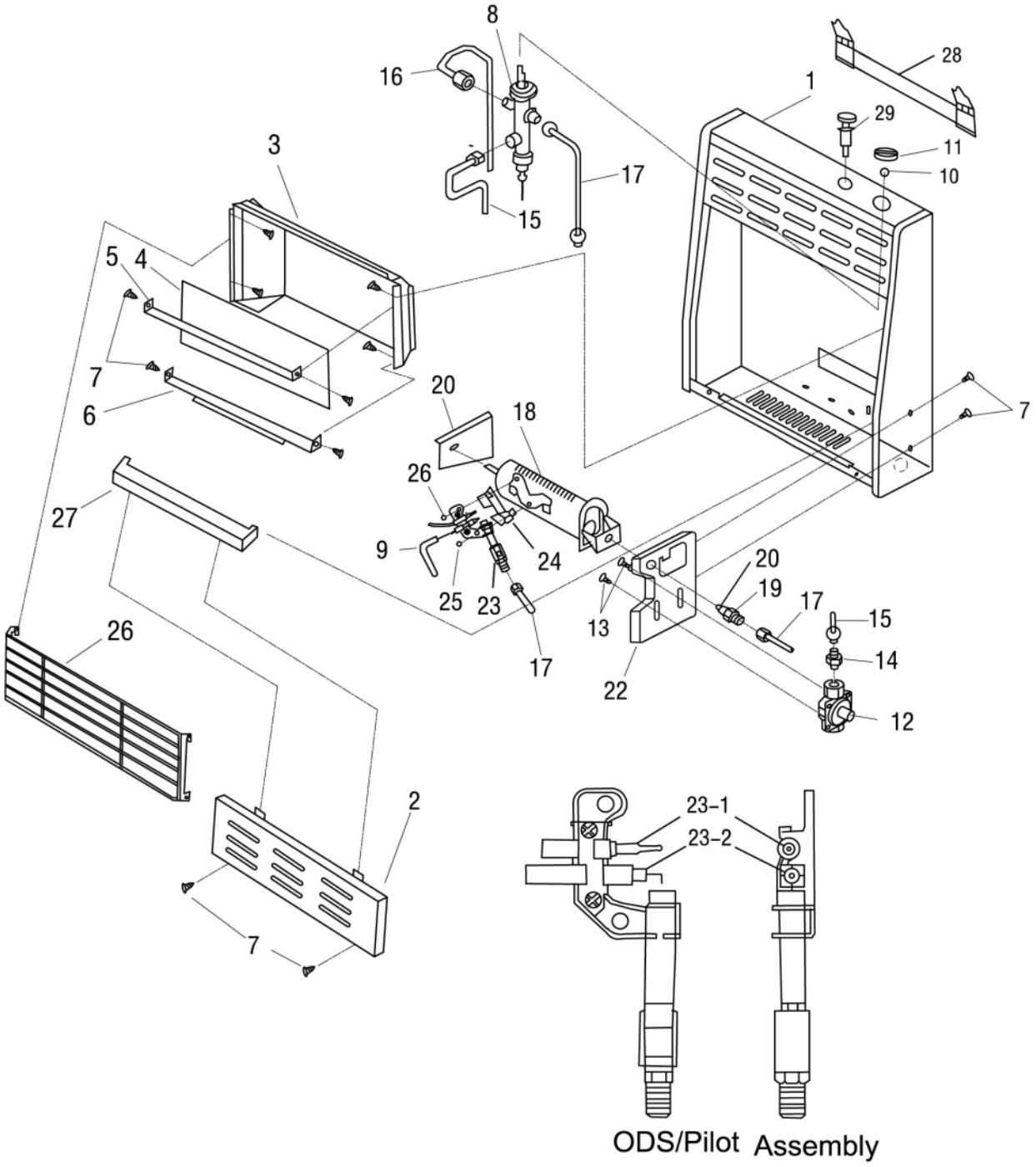

PARTS LIST
HB06MN

This list contains replaceable parts for your heater. When ordering replacement parts, follow the instructions listed under Replacement Parts on page17 of this manual.

KEY NO.	PART NO.	DESCRIPTION	QTY.
1	MB10008E	Cabinet Assembly	1
2	MB09003E	Lower Front Panel Assembly	1
3	MB11005E	Reflector Unit	1
4	ML086-03	Glass	1
5	ML087-03	Upper Glass Retainer	1
6	ML088-03	Lower Glass Retainer	1
7	ML069-02	Self Tapping Screw	12
8	NV2020-12	Control Valve	1
9	ML073-01	Ignitor Line	1
10	ML029-01	Control Valve Fixed Nut	1
11	MB16002	Control Knob Assembly	1
12	NRV81FI-3	Pressure Regulator	1
13	ML079-01	Self Locking Screw	2
14	ML119-01	Pressure Tap	1
15	MB40033	Main Inlet Tube Assembly	1
16	MB40045	ODS Line Assembly	1
17	MB40043	Gas Outlet Tube Assembly	1
18	NBB10-000M1	Burner	1
19	ML101-02	Burner Connector	1
20	ML091-06	Injector	1
21	ML103-02	Left Burner Support Bracket	1
22	ML129-02	Regulator Mounting Bracket	1
23	ND1103x600x9	ODS/Pilot Assembly	1
23-1	ND0803-6	Thermocouple	1
23-2	ND0807-B2	Ignitor Electrode	1
24	ML105-01	ODS Deflector	1
25	6170-5Z	Nut	2
26	ML057-05	Grill Guard	1
27	ML084-03	Middle Panel	1
28	ML060-02	Mounting Bracket	1
29	ML083-03	Ignitor Assembly	1
PARTS AVAILABLE NOT SHOWN			
	MB28001	Assembly Hardware	1
	ML070-11E	CSA/AGA Label	1
	ML071-01	Gas Instruction Decal	1

ILLUSTRATED
PARTS BREAKDOWN
HB10MN

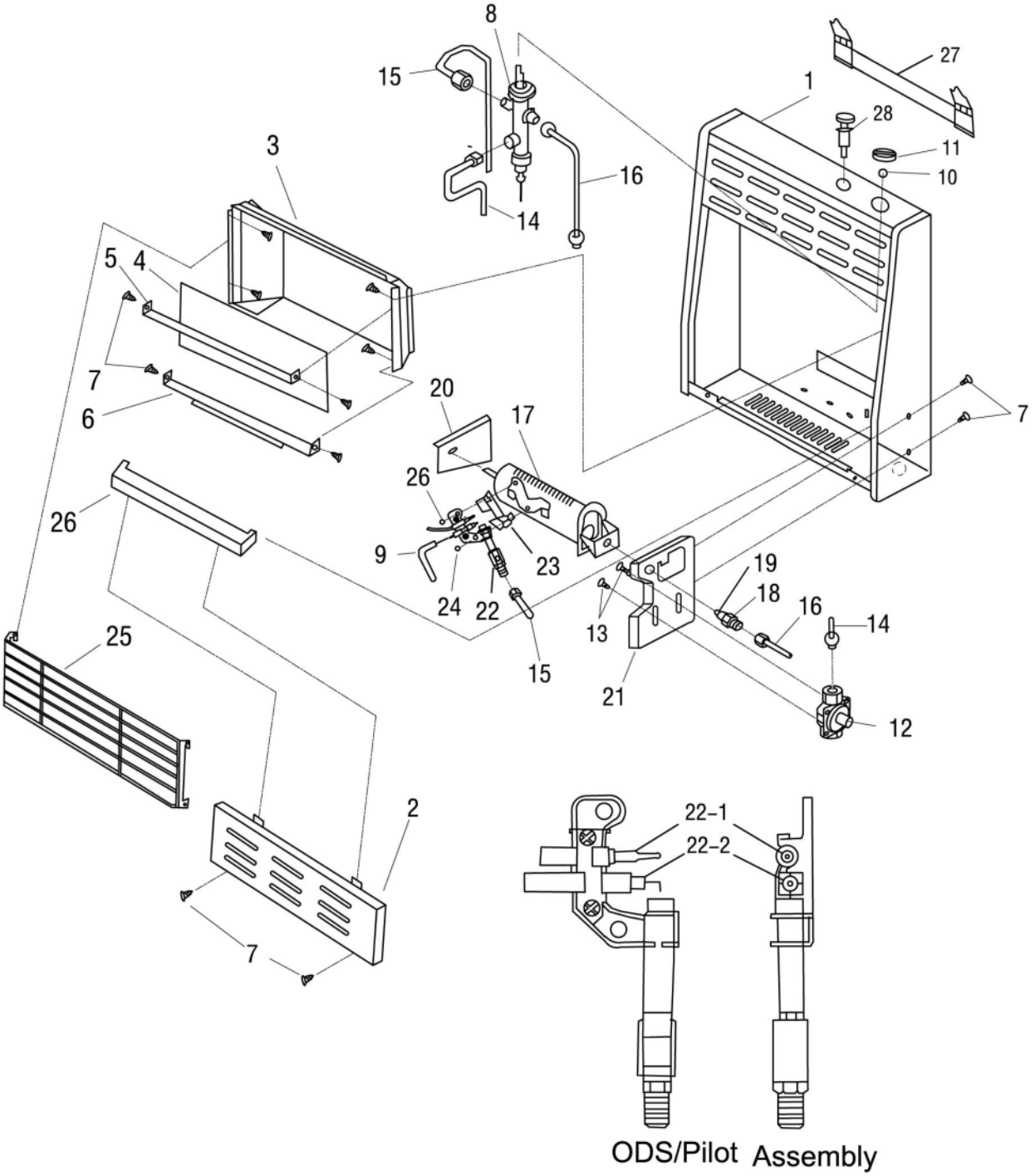

PARTS LIST
HB10MN

This list contains replaceable parts for your heater. When ordering replacement parts, follow the instructions listed under Replacement Parts on page17 of this manual.

KEY NO.	PART NO.	DESCRIPTION	QTY.
1	MB10008E	Cabinet Assembly	1
2	MB09003E	Lower Front Panel Assembly	1
3	MB11005E	Reflector Unit	1
4	ML086-03	Glass	1
5	ML087-03	Upper Glass Retainer	1
6	ML088-03	Lower Glass Retainer	1
7	ML069-02	Self Tapping Screw	12
8	NV2020-1213	Control Valve	1
9	ML073-01	Ignitor Line	1
10	ML029-01	Control Valve Fixed Nut	1
11	MB16002	Control Knob Assembly	1
12	NRV81FI-3	Pressure Regulator	1
13	ML079-01	Self Locking Screw	2
14	MB40034	Main Inlet Tube Assembly	1
15	MB40045	ODS Line Assembly	1
16	MB40054	Gas Outlet Tube Assembly	1
17	NBB10-000M1	Burner	1
18	ML101-02	Burner Connector	1
19	ML091-05	Injector	1
20	ML103-02	Left Burner Support Bracket	1
21	ML129-02	Regulator Mounting Bracket	1
22	ND1103x600x9	ODS/Pilot Assembly	1
22-1	ND0803-6	Thermocouple	1
22-2	ND0807-B2	Ignitor Electrode	1
23	ML105-01	ODS Deflector	1
24	6170-5Z	Nut	2
25	ML057-05	Grill Guard	1
26	ML084-03E	Middle Panel	1
27	ML060-02	Mounting Bracket	1
28	ML083-03	Ignitor Assembly	1
PARTS AVAILABLE NOT SHOWN			
	MB28001	Assembly Hardware	1
	ML070-13	CSA/AGA Label	1
	ML071-01	Gas Instruction Decal	1

ILLUSTRATED PARTS BREAKDOWN

HB10TN

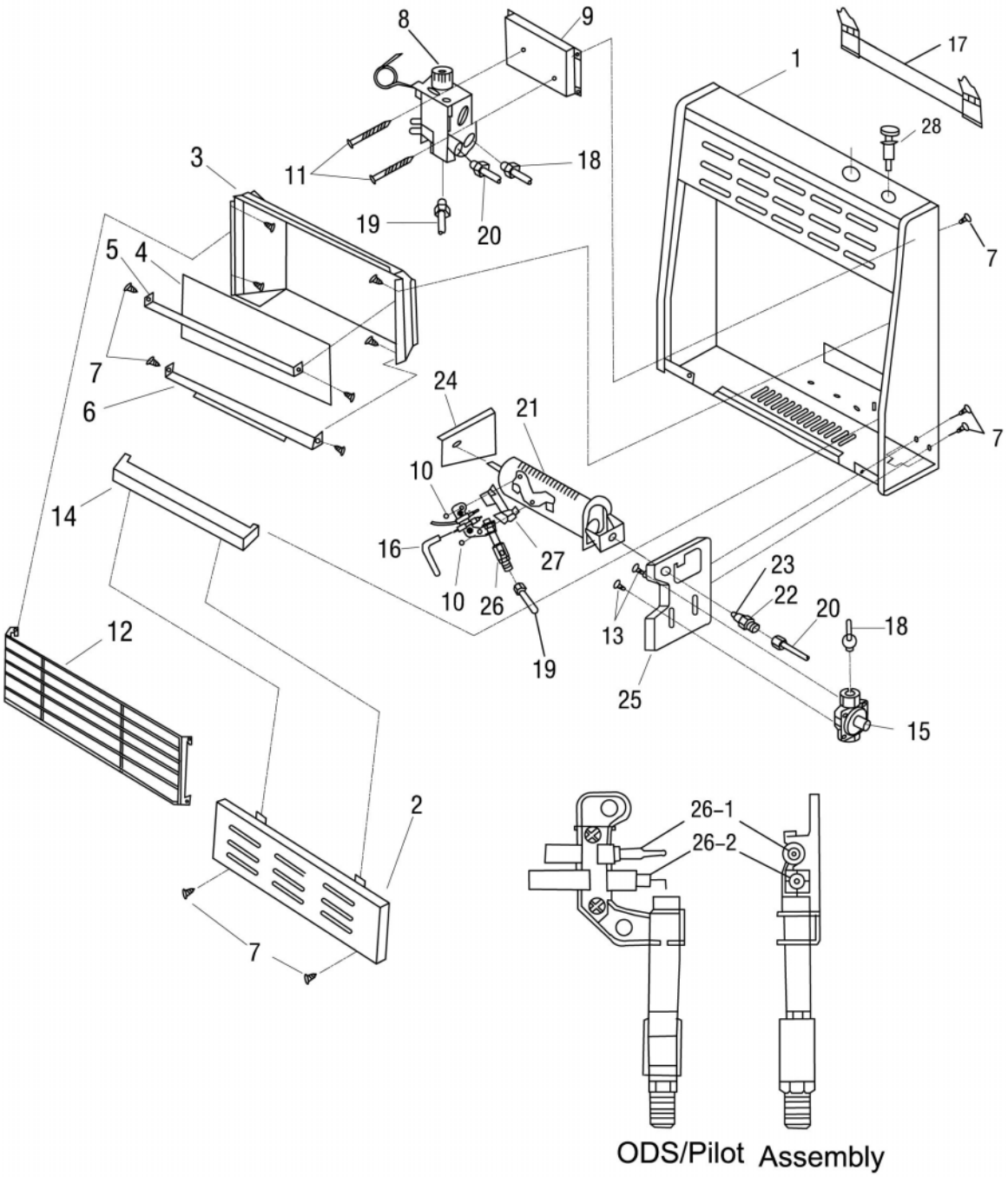

PARTS LIST
HB10TN

This list contains replaceable parts for your heater. When ordering repalcement parts, follow the instructions listed under Replacement Parts on page17 of this manual.

KEY NO.	PART NO.	DESCRIPTION	QTY
1	MB10007E	Cabinet Assembly	1
2	MB09003E	Lower Front Panel Assembly	1
3	MB11005E	Reflector Unit	1
4	ML086-03	Glass	1
5	ML087-03	Upper Glass Retainer	1
6	ML088-03	Lower Glass Retainer	1
7	ML069-02	Self Tapping Screw	12
8	SIT544-130	SIT Thermostat Valve Assembly	1
9	ML111-02	Thermostat Valve Base/Bracket	1
10	6170-5Z	NUT	2
11	845-4.8x60Z	Screws	2
12	ML057-05	Grill	1
13	ML079-01	Self Locking Screw	2
14	ML084-03E	Middle Panel	1
15	NRV81FI-3	Pressure Regulator	1
16	ML073-01	Ignitor Line	1
17	ML060-02	Mounting Bracket	1
18	MB40048	Main Inlet Tube Assembly	1
19	MB40049	ODS Line Assembly	1
20	MB40050	Burner Inlet Tube Assembly	1
21	NBB10-000M1	Burner	1
22	ML101-01	Burner Connector	1
23	ML091-05	Injector	1
24	ML103-02	Left Burner Support Bracket	1
25	ML129-02	Regulator Mounting Bracket	1
26	ND1103x800x9	ODS/Pilot Assembly	1
26-1	ND0803-8	Thermocouple	1
26-2	ND0807-B2	Ignitor Electrode	1
27	ML105-01	ODS Upper Deflector	1
28	ML083-03	Ignitor Assembly	1
PARTS AVAILABLE NOT SHOWN			
	MB28001	Assembly Hardware	1
	ML160-19E	CSA/AGA Label	1
	ML071-01	Gas Instruction Decal	1
	ML065-01	Thermostat Sensing Bulb Clip	1

WARRANTY INFORMATION

KEEP THIS WARRANTY

SERIAL NUMBER LABEL

Always specify model and serial numbers when communicating with the factory.

We reserve the right to amend these specifications at any time without notice. The only warranty applicable is our standard written warranty. We make no other warranty, expressed or implied.

LIMITED WARRANTY HEARTHRITE VENT-FREE GAS SPACE HEATERS

HearthRite warrants this product to be free from defects in materials, components and limited labor for (3) three years from the date of first purchase, provided that the product has been properly installed, operated and maintained in accordance with all applicable instructions. To make certain under this warranty, the Bill of Sale or cancelled check must be presented.

This warranty is extended only to the original retail purchaser. This warranty covers the cost of part(s) required to restore this heater to proper operating condition and an allowance for labor when provided by a HearthRite Authorized Service Center. Warranty part(s) MUST be obtained through authorized dealers of this product and/or HearthRite who will provide original factory replacement parts. Failure to use original factory replacement parts voids this warranty. The heater MUST be installed by a qualified installer in accordance with all local codes and instructions furnished with the unit.

This warranty does not apply to parts that are not in original condition because of normal wear and tear or parts that fail or become damaged as a result of misuse, accidents, lack of proper maintenance or defects caused by improper installation.

Some States do not allow a limitation on how long an implied warranty lasts or an exclusion or limitation of incidental or consequential damages, so the above limitation on implied warranties, or exclusion or limitation on damages may not apply to you.

This warranty gives you specific legal rights, and you may also have other rights that vary from state to state. For information about this warranty, please write to:

HearthRite
A Division of Empire Comfort Systems, Inc.
918 Freeburg Avenue
Belleville, IL 62220

Phone : 618-233-7420 or 1-800-851-3153
Fax : 618-233-7097 or 1-800-443-8648
www.hearthrite.com