This Owner's Manual is provided and hosted by Appliance Factory Parts.

Appliance Factory Parts
Experts in BBQ, Humidifier, & Appliance Parts
1-800-955-7075

COMFORT-AIRE TPRG42001F Owner's Manual

Shop genuine replacement parts for COMFORT-AIRE TPRG42001F

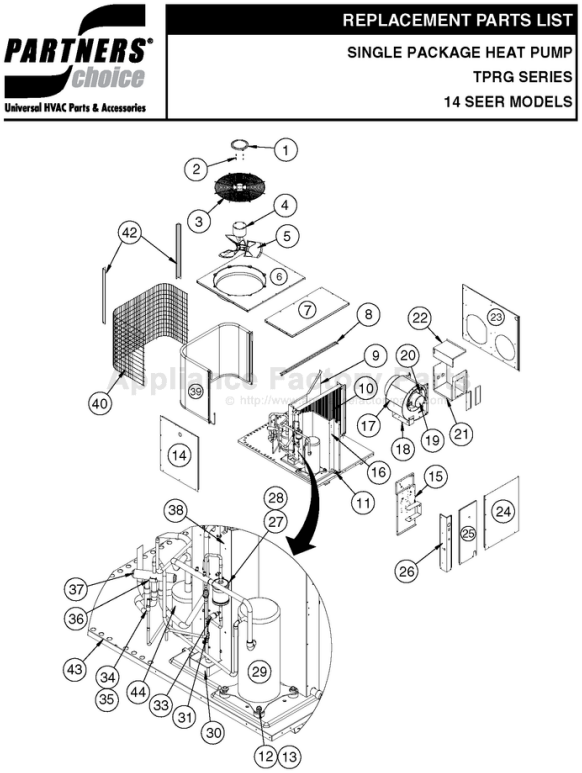

Find Your COMFORT-AIRE HVAC Parts - Select From 1487 Models

-------- Manual continues below --------

PARTNERS® choice

Universal HVAC Parts & Accessories

REPLACEMENT PARTS LIST

SINGLE PACKAGE HEAT PUMP

TPRG SERIES

14 SEER MODELS

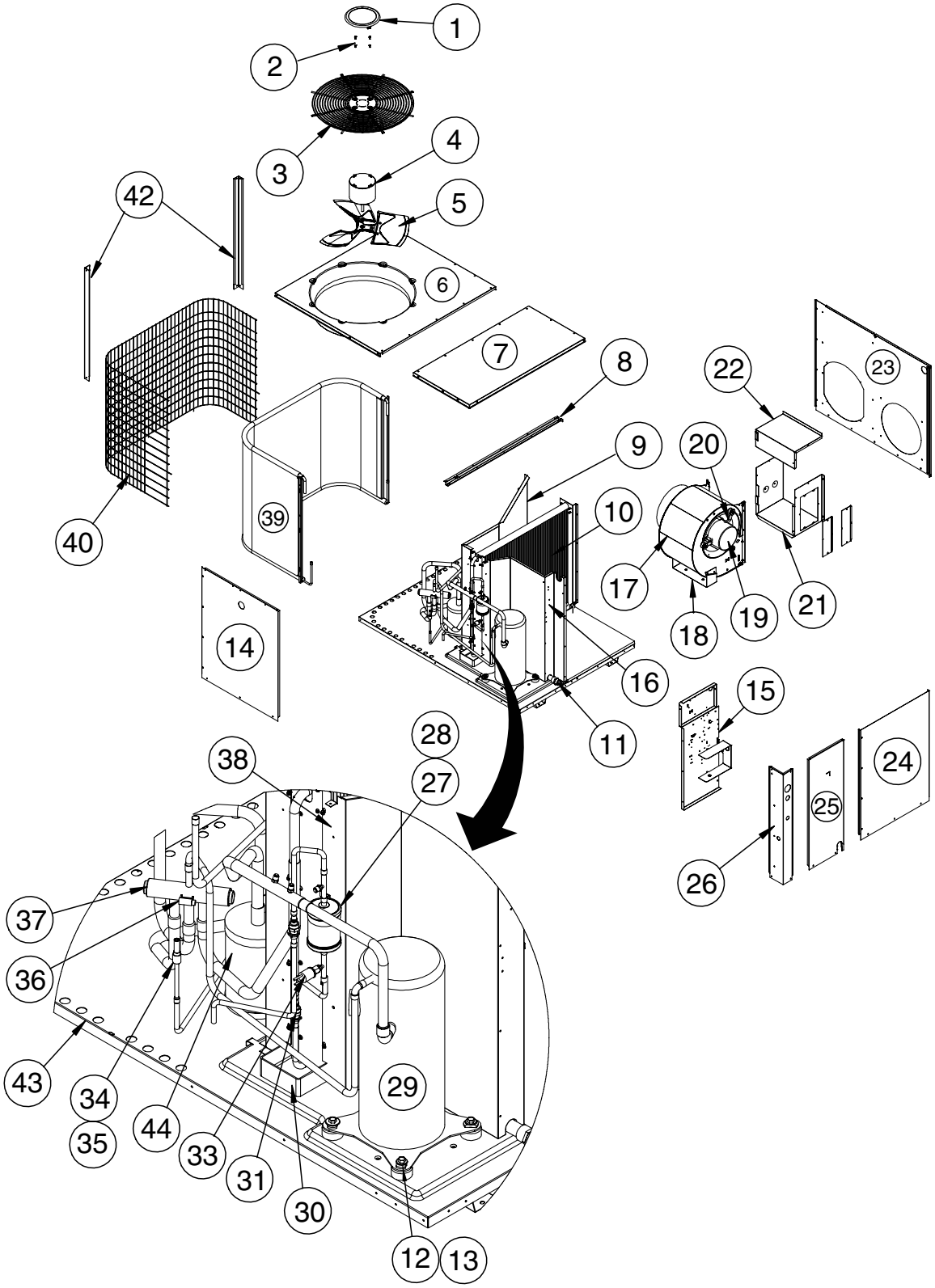

TPRG SERIES SINGLE PACKAGE HEAT PUMP

ITEM NO.	DESCRIPTION	TPRG24001F	TPRG30001F	TPRG36001F	TPRG42001F	TPRG48001F	TPRG60001F
		922005Y	922006Y	922007Y	922008Y	922009Y	922010Y
1	CAP, TOP FAN GRILLE	275291R	275291R	275291R	275291R	275291R	275291R
2	ACORN NUT, BLACK	606261R	606261R	606261R	606261R	606261R	606261R
3	FAN GRILL, BLACK	669404R	669404R	669404R	669404R	669335R	669335R
4	CONDENSOR MOTOR	622164R	622164R	622164R	621990R	622757	622655
5	FAN BLADE	667355R	667355R	667355R	667356R	667383	667319
6	TOP PAN, RIGHT	D07090R	D07090R	D07090R	D07090R	D07091R	D07091R
7	TOP PAN,LEFT	D03570R	D03570R	D03570R	D03570R	D03570R	D03570R
8	DRAIN CHANNEL	D03290R	D03290R	D03290R	D03290R	D03290R	D03290R
9	DIVIDER PANEL ASSEMBLY	D03443R	D03443R	D03443R	D03443R	D03445R	D03445R
10	EVAP COIL	664934R	664934R	664934R	664685R	664704	664903
11	DRAIN TUBE ASSY	663713R	663713R	663713R	663713R	663713R	663713R
12	COMPRESSOR BOLT	600419	600419	600400R	600400R	600400R	600400R
13	COMPRESSOR GROMMET	690304	690304	668530R	668530R	668530R	668530R
14	COVER, COMPRESSOR	D02893R	D02893R	D02893R	D02893R	D02895R	D02895R
15	CONTROL PANEL	271793	271793	271793	271793	271795	271795
16	BLOWER DIVIDER ASSY	D03483R	D03483R	D03483R	D03483R	D03485R	D03485R
17	BLOWER HOUSING	297212R	297212R	297212R	297212R	297212R	297217R
18	FOOT, BLOWER	262970	262970	262970	262970	262970	262970
19	BLOWER MOTOR,DM2XF	M0081904	M0081904	M0104402	M0081902	M0081903	M0056127
20	BLOWER WHEEL	667037R	667037R	667037R	667037R	667037R	667258R
21	BLOWER COVER BOX	D03340	D03340	D03340	D03340	D03340	D03340
22	BLOWER TRANSITION BOX	D03350	D03350	D03350	D03350	D03350	D03350
23	REAR PANEL ASSY.	D03465R	D03465R	D03465R	D03465R	D03469R	D03469R
24	BLOWER PANEL ASSY	D03523R	D03523R	D03523R	D03523R	D03525R	D03525R
25	CONTROL BOX COVER	D02873R	D02873R	D02873R	D02873R	D02875R	D02875R
26	CORNER PANEL	D04363R	D04363R	D04363R	D04363R	D04365R	D04365R
27	FILTER DRIER, BIFLOW	669762R	669762R	669762R	669762R	669762R	669762R
28	STRAP, FILTER / DRIER	2B1881	2B1881	2B1881	2B1881	2B1881	2B1881
29	COMPRESSOR	622706	622707	921427	921463	918872	622747
30	DRAIN PAN	669187R	669187R	669187R	669187R	669187R	669187R
31	FLOW CONTROL ASSY, INDOOR	664518	664595	664597	664772	664600	664786
32	FLOW CONTROL ASSY, OUTDOOR(Not Shown)	664916	664917	664918	664753	664516	664765
33	HIGH PRESSURE SWITCH	632473R	632473R	632473R	632473R	632473R	632473R
34	HOT GAS BYPASS VALVE	669964	669964	669964	669965	669965	669965
35	HOT GAS BYPASS VALVE COIL	670027	670027	670027	670027	670027	670027
36	REVERSING VALVE COIL	669471	669471	669471	669935	669935	669935
37	REVERSING VALVE	669465	669465	669465	669936	669936	669936
38	COIL CLOSE OFF, BOTTOM (Not Shown)	2C1411	2C1411	2C1411	2C1411	2C1411	2C8791
	COIL CLOSE OFF, TOP (Not Shown)	2C1421	2C1421	2C1421	2C1421	2C1421	2C8771
	COIL CLOSE OFF, BACK (Not Shown)	2C1431	2C1431	2C1431	2C1431	2C1433	2C8781
	COIL CLOSE OFF, FRONT (Not Shown)	2C7782	2C7782	2C7782	2C7782	2C7784	2C8761
	COIL CLOSE OFF, FRONT TOP (Not Shown)	2C7851	2C7851	2C7851	2C7851	2C7851	2C8751
39	CONDENSER COIL, FORMED	664865	664865	664865	664865	664924	664904
40	CONDENSER GRILL, FORMED	2A8154R	2A8154R	2A8154R	2A8154R	2B4831	2B4831
41	REPL. HAIL GUARD KIT (Not Shown)	917206	917206	917206	917206	917206	917206
42	CORNER POST	D09993R	D09993R	D09993R	D09993R	D09999R	D09999R
43	BOTTOM PAN ASSY	D03430R	D03430R	D03430R	D03430R	D03431R	D03431R
44	ACCUMULATOR	—	—	—	—	—	668794R

Please specify the correct Model No., Serial No, and Part No.(s) when ordering parts from the nearest authorized dealer or service center.

TPRG SERIES SINGLE PACKAGE HEAT PUMP

ITEM NO.	DESCRIPTION	TPRG24001F	TPRG30001F	TPRG36001F	TPRG42001F	TPRG48001F	TPRG60001F
		922005Y	922006Y	922007Y	922008Y	922009Y	922010Y
45	AMBIENT SENSOR HOUSING (Not Shown)	296587	296587	296587	296587	296587	296587
46	“P” TRAP (Not Shown)	669211R	669211R	669211R	669211R	669211R	669211R
47	COIL SENSOR (Not Shown)	624838	624838	624838	624838	624838	624838
48	BLOWER RELAY, 240VAC (Not Shown)	622180R	622180R	622180R	622180R	622180R	622180R
49	TRANSFORMER (Not Shown)	621709R	621709R	621709R	621709R	621709R	621709R
50	CONTACTOR (Not Shown)	624826	624826	624826	624826	624827	624828
51	PAINT, TOUCH-UP STLG GR TEXTURE(Not Shown)	903598	903598	903598	903598	903598	903598
52	CAPACITOR, DUAL (Not Shown)	621252	620765R	621635	621153R	621944R	621944R
53	DEFROST BOARD (Not Shown)	624813	624813	624813	624813	624813	624813
54	CORE, CHARGING PORT (Not Shown)	662103R	662103R	662103R	662103R	662103R	662103R
55	ACCESS FITTING (Not Shown)	663812R	663812R	663812R	663812R	663812R	663812R
56	CAP, SERVICE PORT (Not Shown)	663818R	663818R	663818R	663818R	663818R	663818R
57	COMPRESSOR MOLDED PLUG (Not Shown)	634797R	634797R	634659R	634659R	634660R	634660R
58	CRANKCASE HEATER (Not Shown)	632677	632677	632677	632677	632677	632677
59	SET OF WIRES (Not Shown)	M0104701	M0104701	M0104702	M0104702	M0104702	M0108302
60	HARD START ASSEMBLY (Not Shown)	M0074002R	M0074002R	—	—	—	—
61	FUSE, 3 AMP (Not Shown)	632261R	632261R	632261R	632261R	632261R	632261R
62	AMBIENT SENSOR (Not Shown)	624780	624780	624780	624780	624780	624780

Please specify the correct Model No., Serial No, and Part No.(s) when ordering parts from the nearest authorized dealer or service center.

HEAT CONTROLLER

1900 Wellworth Ave., Jackson MI 49203 • Ph. 517-787-2100 • www.heatcontroller.com

A MAS Company

Specifications & illustrations subject to change
without notice or incurring obligations (04/15).

709711A (Replaces 7097110)