This Owner's Manual is provided and hosted by Appliance Factory Parts.

Appliance Factory Parts
Experts in BBQ, Humidifier, & Appliance Parts
1-800-955-7075

FRIEDRICH PDE12R3SG Owner's Manual

Shop genuine replacement parts for FRIEDRICH PDE12R3SG

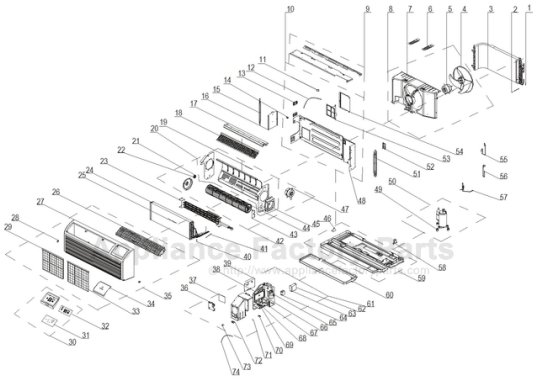

Find Your FRIEDRICH Air Conditioner Parts - Select From 1577 Models

-------- Manual continues below part list --------

Available Replacement Parts for FRIEDRICH PDE12R3SG

P68700128	FRONT PANEL CLIP TYPE=PTC
P68700126	HEATER WIRING BLOCK BOARD TYPE=PTC
P68700156	TERMINAL BOARD, INPUT POWER TYPE=PTC
P68700152	AMBIENT TEMP SENSOR
P68700154	WIRING TERMINAL, 2 POSITION TYPE=PTC
P68700147	BEARING HOLDER SUB-ASSY TYPE=PTC
P68700138	FILTER SUB-ASSY TYPE=PTC
P68700123	MOTOR BRACKET, INDOOR TYPE=PTC
P68700155	WIRING TERMINAL, 7 POSITION TYPE=PTC
P68700135	FAN, CONDENSER TYPE=PTC
P68700163	CONTROL DOOR TYPE=PTC
P68700122	DISCHARGE SCREEN TYPE=PTC
P68700143	DISCHARGE GRILLE TYPE=PTC
P68700142	FRONT PANEL TYPE=PTC
P68700175	Diversion Circle
P68700196	Evaporator Assembly
P68700199	LCD Cover Sub-Assembly
P68700201	Display Board
P68700202	Front Panel Assembly
P68700207	Main Board 1
P69700367	Temperature Sensor
P69700380	Cross Flow Fan

Installation and Operation Manual

FRIEDRICH

PTAC
Packaged Terminal Air Conditioners & Heat Pumps

SG SERIES

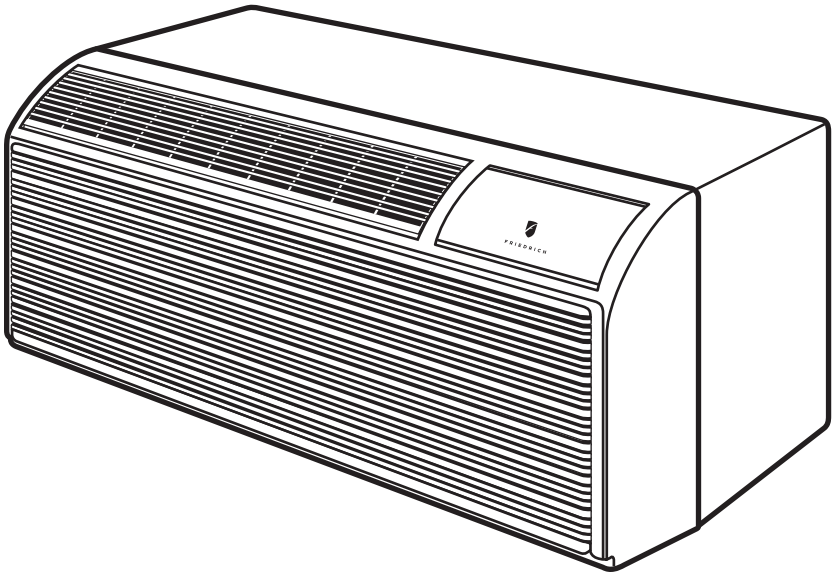

9830 1000_00 (01/15)

Table of Contents

Congratulations 3

General Instructions 3

General Specifications 4

Installation Checklist 4

PTAC Installation Recommendations 5

Wall Sleeve Installation Instructions (PDXWS) 6

Alternate Wall Installations 7

One-Piece Deep Wall Sleeve Installation (PDXWSEXT) 9

PXDR10 Drain Kit Installation Instructions (optional for new construction) 10

External Drain (for new construction or unit replacement) 11

PXGA Standard Grille Installation Instructions 12

Electrical Wiring for 265 Volt Models 14

Chassis Install Preparation 16

Chassis Installation 18

How To Connect 19

Friedrich PTAC Digital Control and Unit Features 20

System Configuration 22

Digital Control User Input Configuration 23

Digital Control Operation 24

Remote Control Thermostat Installation 25

Remote Thermostat and Low Voltage Control Connections 25

Final Inspection & Start-up Checklist 27

Routine Maintenance 27

Basic Troubleshooting 28

Service & Assistance 29

Accessories 30

NOTE: All PTAC 7000, 9000, 12000 units come with a standard 3.5 kW power cord. All PTAC 15000 units come with a standard 5 kW power cord For units using our optional heating cords (2.5 kW, 3.5 kW, and 5 kW) please refer to page 14 for the proper accessory part numbers and power cord installation instructions.

Congratulations

Thank you for your decision to purchase Friedrich. Your new Friedrich has been carefully engineered and manufactured to give you many years of dependable, efficient operation, maintaining a comfortable temperature and humidity level. Many extra features have been built into your unit to assure quiet operation, the greatest circulation of cool, dry air, and the most economic operation.

General Instructions

This Installation and Operation Manual has been designed to insure maximum satisfaction in the performance of your unit. For years of trouble-free service, please follow the installation instructions closely. We cannot overemphasize the importance of proper installation.

⚠WARNING

Refrigeration system under high pressure

Do not puncture, heat, expose to flame or incinerate.

Only certified refrigeration technicians should service this equipment.

R410A systems operate at higher pressures than R22 equipment. Appropriate safe service and handling practices must be used.

Only use gauge sets designed for use with R410A. Do not use standard R22 gauge sets.

Here are some suggestions to help you use your new Friedrich most efficiently:

1. Carefully read and follow the installation instructions.
2. Make sure the unit is the right capacity for the area being cooled. An undersized unit makes the unit work too hard, using more electricity than needed and increases wear. An oversized unit will cycle on and off too rapidly, and therefore cannot control humidity as well.
3. Clean the filter frequently (See Routine Maintenance, Page 27).
4. Do not block the air flow to and from the unit.
5. A dirty filter or improperly set controls can affect the cooling ability of the unit.
6. If cooling is weak and you have verified that the filter is clean and the controls are properly set, the unit may need service and you should call your Friedrich service provider to check the unit.
7. Keep blinds, shades and drapes closed on the sunny side of the room being cooled to reduce radiant heat.
8. Proper insulation helps your unit maintain the desired inside temperature.
9. Whenever possible, shade south and west facing windows.
10. Keep window coverings away from the unit to provide free air flow.

⚠WARNING

Read Installation Operation Manual

Please read this manual thoroughly prior to equipment installation or operation.

It is the installer's responsibility to properly apply and install the equipment. Installation must be in conformance with the NFPA 70 -2008 National Electric Code or current edition, International Mechanic Code 2009 or current edition and any other applicable local or national codes.

Failure to do so can result in property damage, personal injury or death.

Your safety and the safety of others are very important.

We have provided many important safety messages in this manual and on your appliance. Always read and obey all safety messages.

This is a safety Alert symbol.
This symbol alerts you to potential hazards that can kill or hurt you and others.
All safety messages will follow the safety alert symbol with the word "WARNING" or "CAUTION". These words mean:

⚠WARNING — Indicates a hazard which, if not avoided, can result in severe personal injury or death and damage to product or other property.

⚠CAUTION — Indicates a hazard which, if not avoided, can result in personal injury and damage to product or other property.

All safety messages will tell you what the potential hazard is, tell you how to reduce the chance of injury, and tell you what will happen if the instructions are not followed.

NOTICE — Indicates property damage can occur if instructions are not followed.

General Specifications

Typical Unit Components and Dimensions

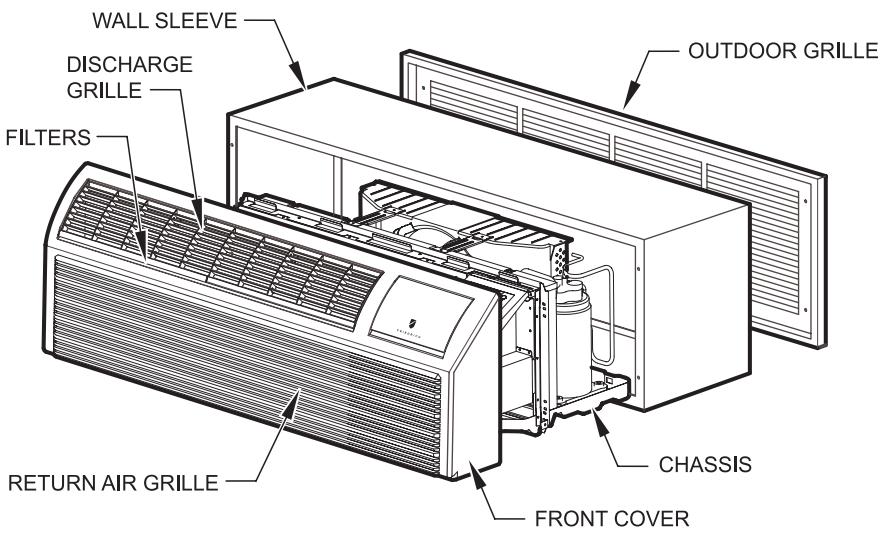

PDXWS Wall Sleeve Dimensions:
16" H x 42" W x 13-¾" D

Front Cover Dimensions:
16" H x 42" W x 7-¾" D

Cut-Out Dimensions:
16-¼" x 42-¼"

PTAC/PTHP Model Identification Guide

MODEL NUMBER PD | H | 07 | K | 3 | S | G | A

Engineering Digit

Series
PD = Friedrich Digital PTAC

Design Series
Note: All PTAC models with a C design series or later come standard with Diamonblue seacost protection and digital controls.

System
X = Accessory
E = Cooling with or without electric heat
H = Heat Pump with Auxiliary Heat

Chassis
S = Standard

Nominal Capacity
07 = 7,000 Btuh 12 = 12,000 Btuh
09 = 9,000 Btuh 15 = 15,000 Btuh

Nominal Heater Size (230V or 265V)

2 = 2.5 KW 3 = 3.5 KW 5 = 5.0 KW*

Voltage
K = 230/208V - 1 Ph. - 60 Hz.
R = 265V - 1 Ph. - 60 Hz.

* 5.0 kw only available on 9,000 12,000 and 15,000 BTU models

Installation Checklist

- ❑ Inspect all components and accessories for damage before and after installation.
- ❑ Remove the cardboard wall sleeve support and grill weatherboard.
- ❑ Check for proper wall sleeve installation in accordance with the wall sleeve installation instructions.
- ❑ Check for a subbase kit or other means of structural support which is required for ALL installations projecting more than 8" into room.
- ❑ Install the recommended Condensate Drain Kits for complete condensate removal.
- ❑ Ensure that the chassis is installed in a 16" high x 42" wide wall sleeve that is no deeper than 13 ¾". A baffle kit is required if the sleeve exceeds that depth.
- ❑ Ensure that chassis and chassis front cover are installed and secured properly.
- ❑ Ensure that drapes, bed, bedspread, furniture, etc. DO NOT block either return or discharge air grilles.
- ❑ Inspect the condenser air inlet and outlet for any obstructions (shrubbery, etc.)
- ❑ Ensure that 'reset' button is pressed on LCD device (only on cord connected models).

PTAC Installation Recommendations

For proper PTAC unit performance and maximum operating life refer to the minimum installation clearances below:

Figure 1

PTAC units should be installed no closer than 12" apart when two units are side by side. If three or more PTAC units are to operate next to one another allow a minimum of 36" between units. Also, a vertical clearance of 60" should be maintained between units installed. In the interior of the room the unit should be located a minimum of 1/4" from the floor and a minimum of 36" from the ceiling.

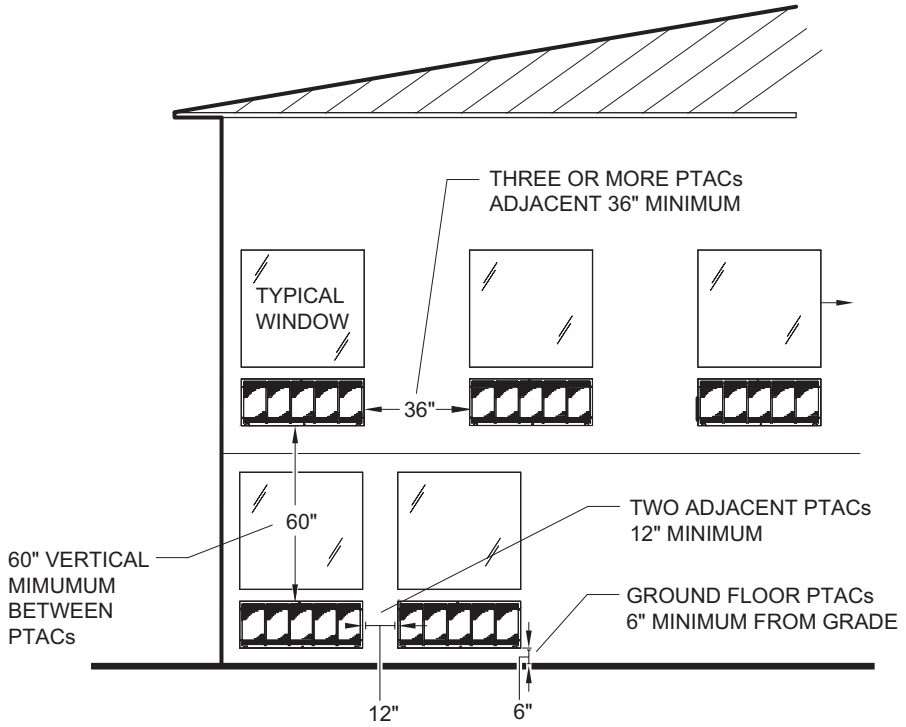

VIEW: OUTSIDE BUILDING ELEVATION

FRP001

For PTACs on the ground floor or anytime obstructions are present, use the following guidelines:

Figure 2

- For minor obstructions such as lamp poles or small shrubbery a clearance of 12" from the outdoor louver should be maintained.
- For major obstructions such as a solid fence, wall or other heat rejecting device like a condensing unit, a minimum distance of 36" should be kept.

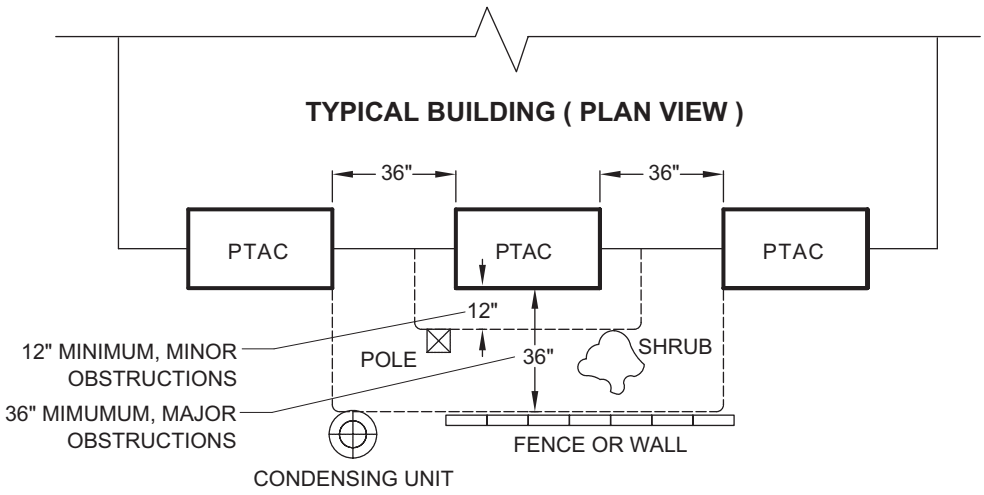

FRP002

The above suggestions are for reference only and do not represent all possible installations. Please contact Friedrich for information regarding affects of other installation arrangements. By following these simple recommendations you can be confident that your Friedrich PTAC will provide years of worry free operation.

Wall Sleeve Installation Instructions (PDXWS)

NOTE: Insure that the unit is only installed in a wall structurally adequate to support the unit including the sleeve, chassis and accessories. If the sleeve projects more than 8" into the room, a subbase or other means of support MUST be used. Please read these instructions completely before attempting installation.

⚠ WARNING

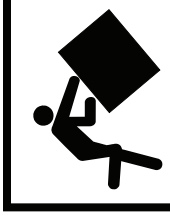

Falling Object Hazard

Not following Installation Instructions for mounting your air conditioner can result in property damage, injury, or death.

NOTICE

DO NOT allow any pitch toward the inside.

Flashing on all 4 sides of the opening is recommended.

Potential property damage can occur if instructions are not followed.

For Deep Wall Installation (Greater than 13 1/4") See Page 9

The following instructions apply ONLY to walls less than 13 ¼" in depth.

1. The PXDR10 Drain Kit (optional for new construction) see page 10 if applicable, must be installed before the wall sleeve is installed into the wall.
2. The External Drain (for new construction or unit replacement) see page 11, if applicable, must be installed before the wall sleeve is installed into the wall.
3. From inside the building, position the wall sleeve in the opening and push it into the wall until it protrudes at least ¼" on the outside. Do not allow sleeve to be pulled. (See Figure 11, Page 10).
4. Position the wall sleeve with a slight tilt towards the outside to facilitate condensate drainage. It should be level side-to-side and the front should be ¼ bubble higher than the back.

Figure 3

Typical Wall Sleeve Installation

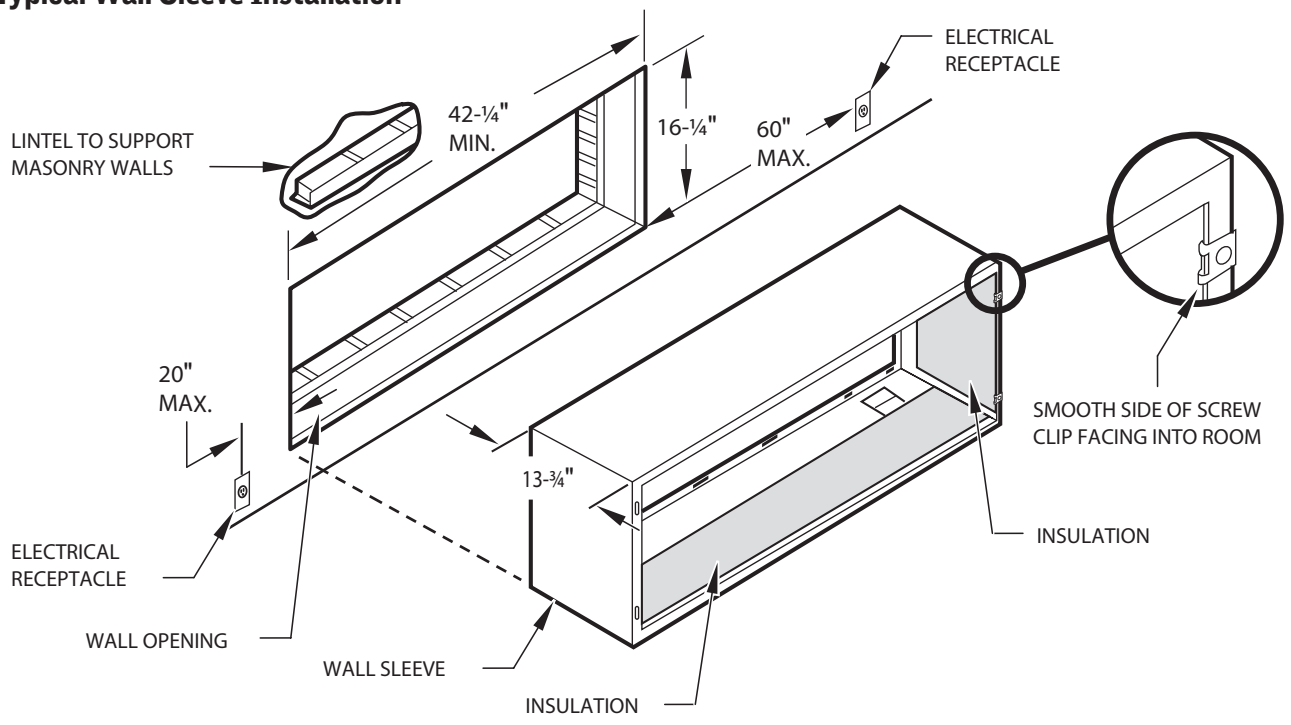

NOTE: All 230/208V units are manufactured with a 60" power cord and all 265V units with a 18" power cord.

FRP008

Alternate Wall Installations

Figure 4
Panel Wall

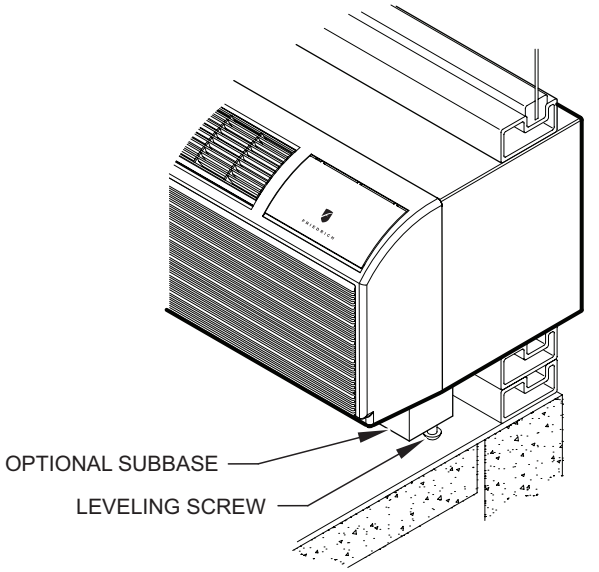

FRP003

Figure 6
Curtain Wall

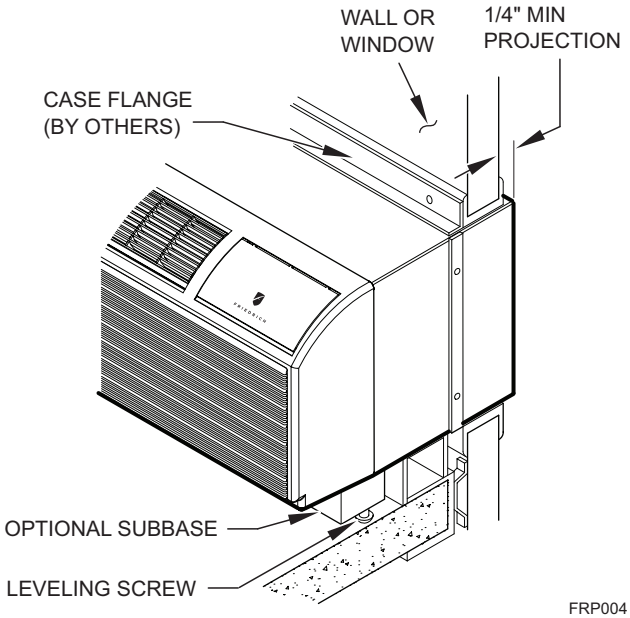

FRP004

Figure 5
Frame and Brick Veneer

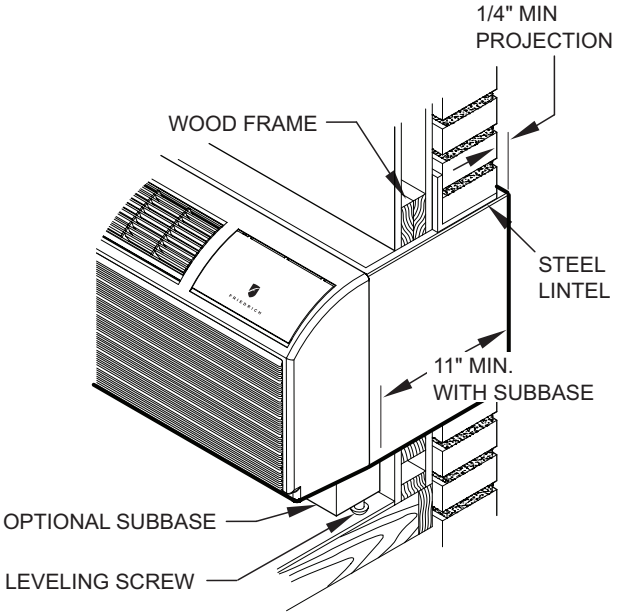

FRP005

Figure 7
Block and Brick Veneer

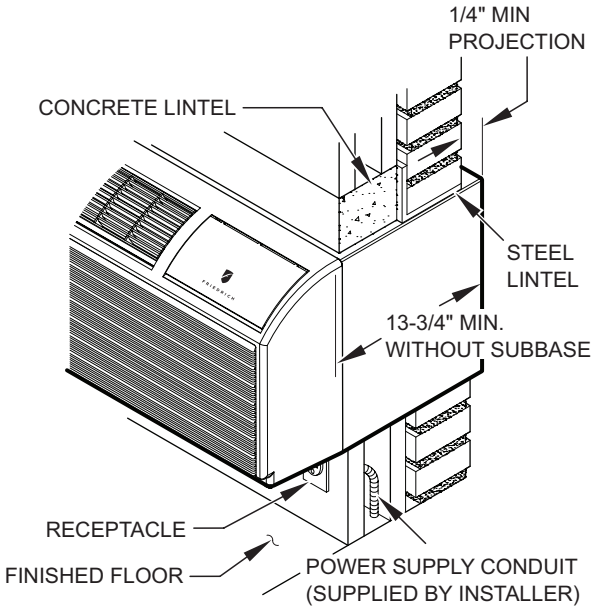

FRP006

NOTE: Follow all wall system manufacturer installation instructions. For sunrooms and modular buildings, adhere to their installation instructions for supporting and sealing sleeve to their frames. All wall and window/wall installations must provide for proper drainage. In applications where the drain holes on the PTAC wall sleeve are not exposed beyond the wall an internal drain system is recommended. It is the installer's responsibility to ensure there is adequate drainage for the PTAC unit.

Figure 8

Wall Sleeve Attachment

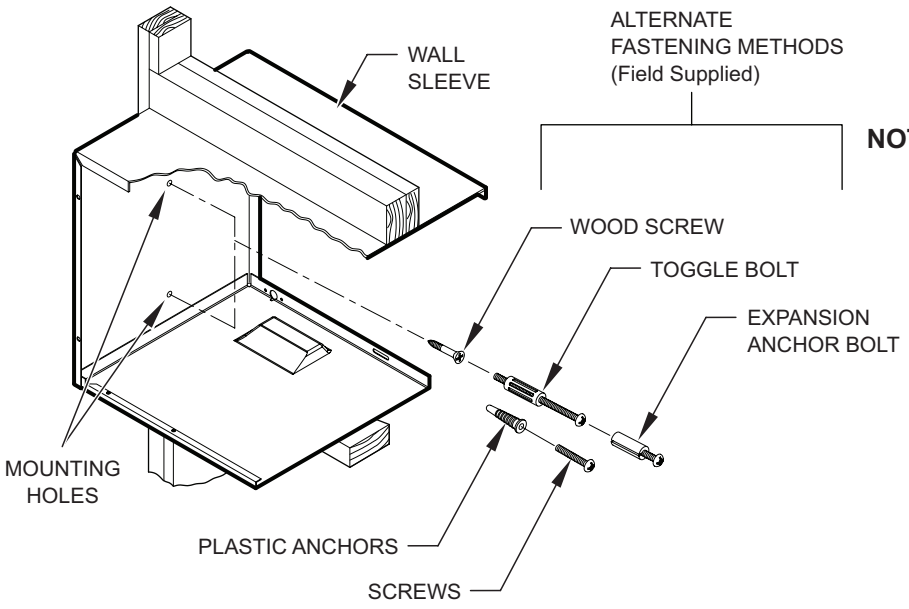

NOTE: The Wall Sleeve must be horizontally level (side-to-side) and pitched 1/4 bubble to the outside when installed in an opening.
The mounting hole location should be approximately 2-4” from the top and bottom of the sleeve.

FRP007

Figure 9

Dimensions

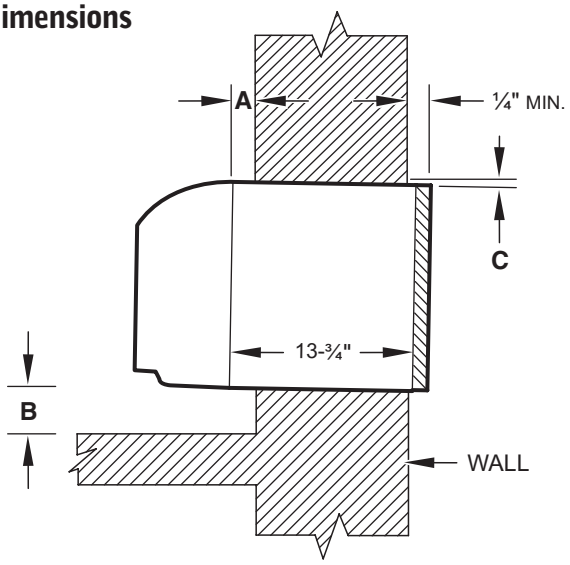

Dimension*	A Allow for wall finishing (Minimum)	B Allow for floor finishing Min.	 Max.	C Allow for proper drainage (Front-to-Back)
No Accessories	¼"	¼"	---	---
With Subbase	1-¾"	3-½"	5"	---
With Lateral Duct	¾"	¼"	---	---
Wall Sleeve Tilt	---	---	---	¼"

* If more than one accessory is to be used, use the maximum dimension. If the wall thickness is more than 13-¾" - (A+ ¼"), a sleeve extension must be used.

FRP009

5. Drill two 3/16" holes through each side of the sleeve approximately 4" from top and 4" from bottom of sleeve. Screw four #10 x 1" screws (included) or appropriate fasteners for your installation, through the holes in the sides of the wall sleeve.

6. Apply sealant around the wall sleeve where it projects through the inside and outside wall surfaces. Apply the sealant to the screw heads or the tops of the fasteners used in Step #5.

7. If the chassis and exterior grille are to be installed later, leave the weatherboard and center support in place, otherwise remove and dispose of them. (See Figure 13, Page 12).

8. Provide a support lintel if the wall sleeve is installed in a concrete or masonry wall (See Figure 10, Page 9).

Figure 10
Lintel Installation

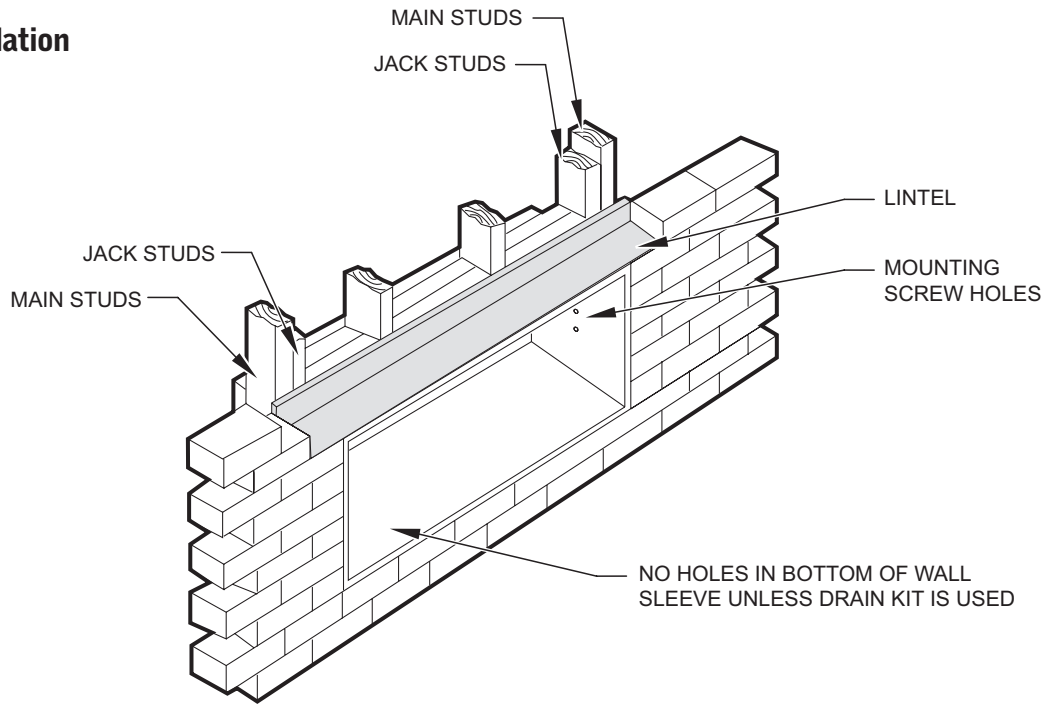

NOTE: Construct wall opening to comply with all applicable building codes.

FRP010

One-Piece Deep Wall Sleeve Installation (PDXWSEXT)

If the wall is thicker than 13 1/4" a deep wall sleeve or wall sleeve extension MUST be used. The deep wall sleeve may be special ordered through your Sales Representative.

PXDR10 Drain Kit Installation Instructions (optional for new construction)

NOTE: Determine whether drain will be located within the wall, on the indoor side, or will drain to the exterior of the building. Follow appropriate instructions below depending on your particular type of installation.

Internal Drain

NOTE: If installing an internal drain, you MUST install a drain kit on the wall sleeve before the wall sleeve is installed.

1. Refer to Figure 11 and locate the drain within the "Preferred" area of best drainage. Maintain at least a ½" clearance from the embossed area.
2. Using the mounting plate with the ½" hole as a template, mark and drill two, 3/16" mounting holes and a ½" drain hole in the sleeve bottom.
3. Remove the backing from the gasket and mount it on the flat side of the mounting plate. (See Figure 12, Page 11). Insert the drain tube through the hole in the gasket and mounting plate so the tube flange will be against the wall sleeve.
4. Position the assembly beneath the drilled holes and secure it with #10-24 x ½" machine screws and lock nuts provided. Seal the tops of the screws with silicone caulking.
5. Use ½" I.D. copper tube, PVC pipe, or vinyl hose (obtained locally) to connect the internal drain tube to the drain system in the building.
6. Referring to Figure 12, Detail A, Page 11, locate and assemble the (2) two cover plates and gaskets over the drain holes at the rear of the wall sleeve. Attach them with the #10 sheet metal screws provided. Make certain that the four overflow slots at the rear of the wall sleeve are not blocked (See drawing of the back of the sleeve Figure 12, Page 11).
7. If a deep wall extension (PDXWSEXT) is used, after installing the field supplied flashing, caulk as required. Be sure to caulk around the flashing and the wall sleeve where the hole was drilled for the drain tube.

Figure 11

Drain Kit Location and Installation

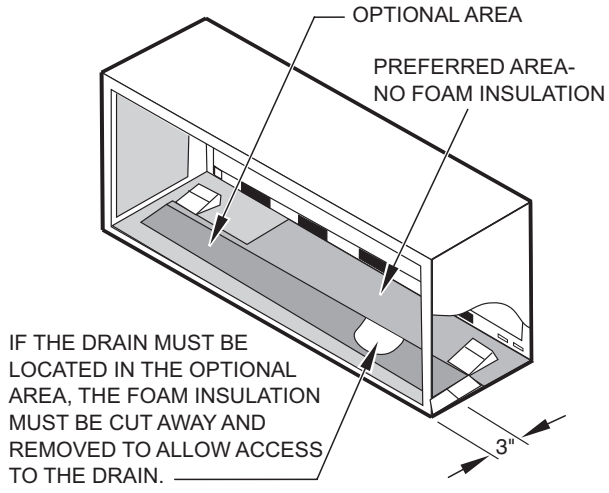

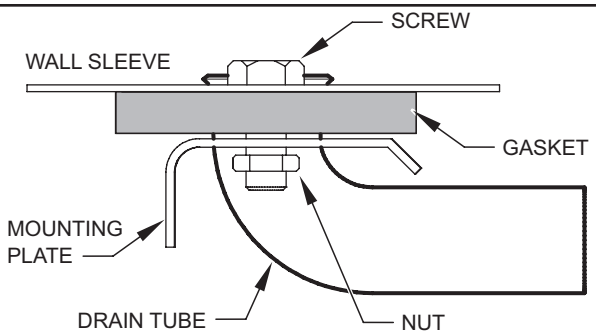

SIDE VIEW

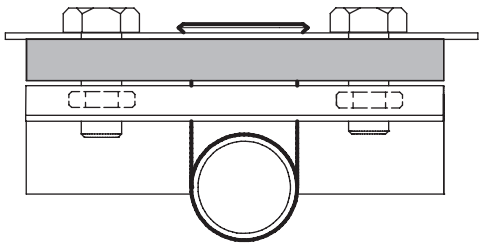

FRONT VIEW

FRP011

PXDR10	
QUANTITY	**DESCRIPTION**
2	COVER PLATES
1	MOUNTING PLATE
1	DRAIN TUBE
3	MOUNTING PLATE GASKET
4	#10 X ½" SHEET METAL SCREWS
2	#10-24 X ½ " MACH. SCREWS
2	#10-24 X ½" LOCKNUTS

External Drain (for new construction or unit replacement)

When using an external drain system, the condensate is removed through either of two drain holes on the back of the wall sleeve. Select the drain hole which best meets your drainage situation and install the drain kit. Seal off the other with a cover plate.

Drain Tube Installation (See Figure 12)

1. Peel the backing tape off the gaskets and apply the sticky side to one cover plate and one mounting plate as shown in Details A and B.
2. Place the drain tube through the gasket and the mounting plate with the flange toward the wall sleeve.
3. Attach the drain tube assembly to one of the two drain holes at the rear of the wall sleeve. The large flange on the mounting plate is positioned at the bottom of the sleeve facing toward the sleeve, Detail B. When the drain tube is positioned at the desired angle, tighten the screws.

Cover Plate Installation

4. Mount the foam gasket to the cover plate. Using two #10 x ½" sheet metal screws (provided), attach the cover plate to the remaining drain hole. Make certain the large flange on the plate is positioned at the bottom of the sleeve.
5. Discard the additional cover plate, gasket, machine screws, and locknuts.

NOTICE

If the wall sleeve has not been installed, the drain tube must be rotated to a horizontal position until after the sleeve is installed. Tighten the mounting plate screws when the tube is in the proper position. Make certain that the four overflow slots at the rear of the wall sleeve are not blocked (See Figure 12).

When sealing the sleeve on the outside of the building, be careful NOT to let the sealant block the two condensate drain holes or the four overflow slots at the bottom flange of the sleeve.

Potential property damage can occur if instructions are not followed.

Figure 12
Drain Kit Installation

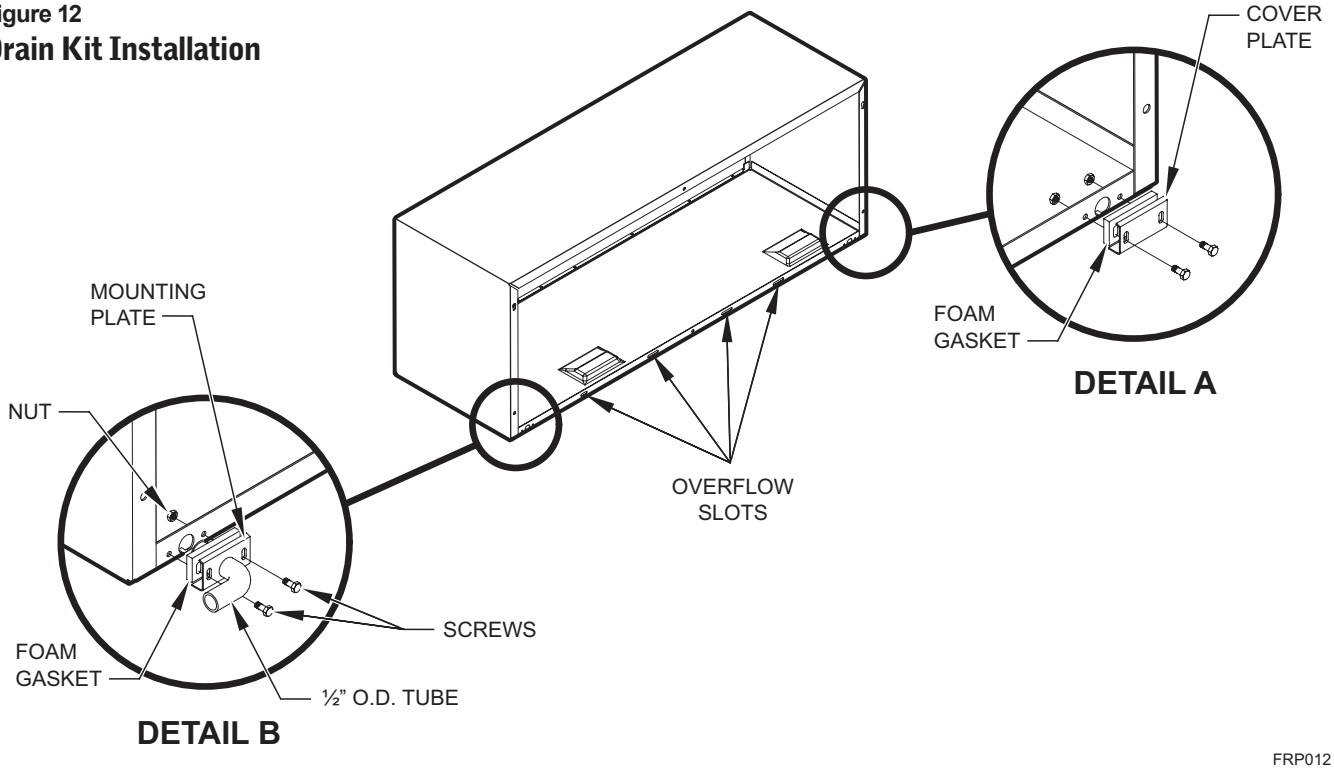

NOTE: The large flange on the mounting plate is positioned at the bottom of the sleeve facing toward the sleeve. The drain tube must be rotated to a horizontal position to allow for the wall sleeve to be installed into the wall. Once the wall sleeve is installed, return the drain tube to a downward angle.

PXGA Standard Grille Installation Instructions

1. Remove the center support and weatherboard if still installed in the sleeve.
2. Insert six plastic grommets into the grille openings from the outside of the grille as shown in Figure 13.
3. Insert two #8 x ⅜" sheet metal screws (provided) in the top two outside edge plastic grommets, and tighten them half way into the grommets.
4. Grasp the grille by the attached plastic handles. Position it with the condensate drain knockouts facing down.

   From inside the building, maneuver the grille through the wall sleeve and pull toward you until the screw heads are inserted into the keyhole slots at the top of the wall sleeve. Tighten the two screws completely.
5. Insert the remaining screws into the remaining holes and tighten securely.

⚠ WARNING

Falling Object Hazard

Not following Installation Instructions for mounting your air conditioner can result in property damage, injury, or death.

Figure 13

Standard Grille

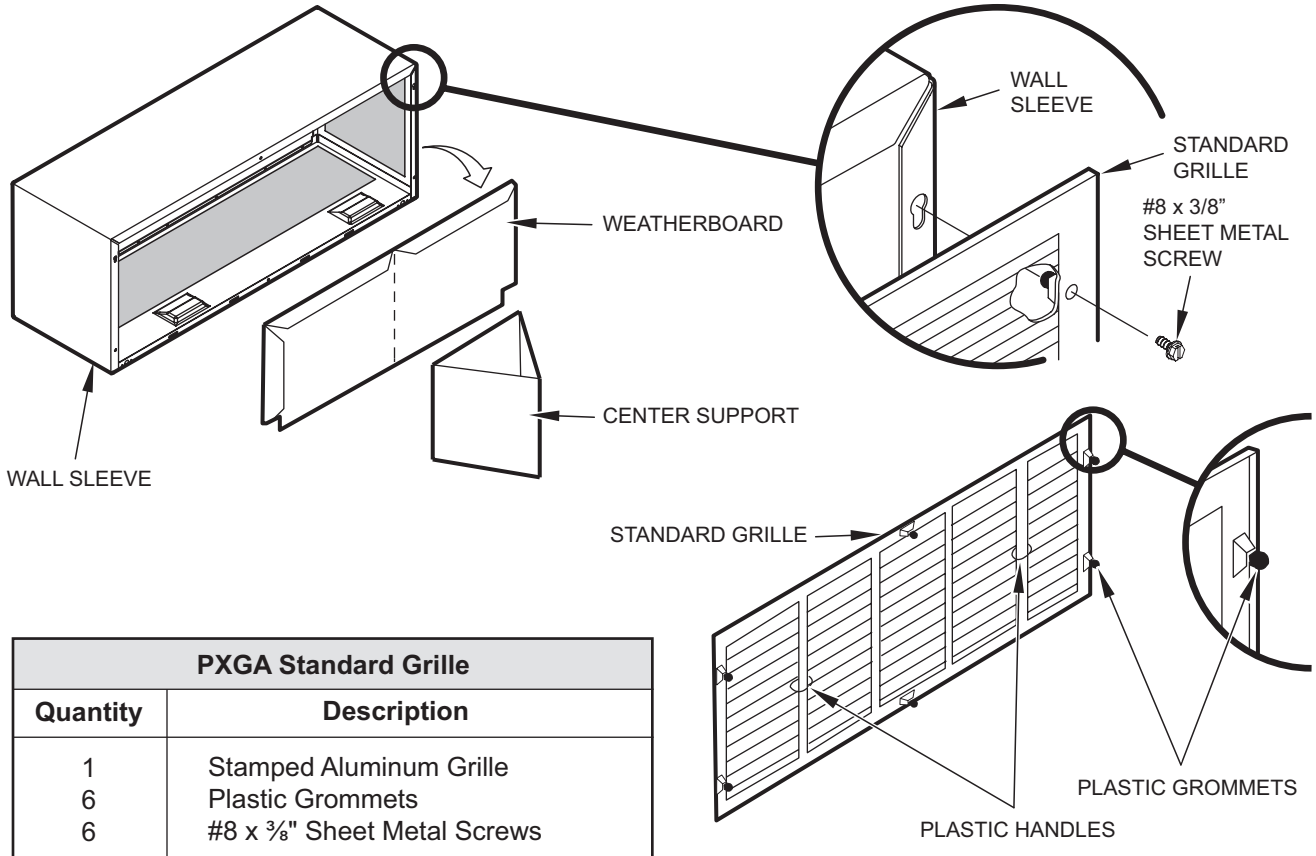

PXGA Standard Grille	
Quantity	**Description**
1	Stamped Aluminum Grille
6	Plastic Grommets
6	#8 x ⅜" Sheet Metal Screws

A. Electrical Rating Tables

All 230/208 volt units are equipped with power cords.

NOTE: Use Copper Conductors ONLY. Wire sizes are per NEC, check local codes for overseas applications.

Table 1 RECEPTACLES AND FUSE TYPES

Voltage	230V			265V		
Amps	15	20	30	15	20	30
Heater Size	2.5 kW	3.5 kW	5.0 kW	2.5 kW	3.5 kW	5.0 kW
Receptacles						
NEMA# Receptacle	6-15R	6-20R	6-30R	7-15R	7-20R	7-30R
NEMA# Plug	6-15P	6-20P	6-30P	7-15P	7-20P	7-30P

FUSE/CIRCUIT BREAKER	Use ONLY type and size fuse or HACR circuit breaker indicated on unit's rating plate. Proper current protection to the unit is the responsibility of the owner. NOTE: A time delay fuse is provided with 265V units.
GROUNDING	Unit MUST be grounded from branch circuit through service cord to unit, or through separate ground wire provided on permanently connected units. Be sure that branch circuit or general purpose outlet is grounded. The field supplied outlet must match plug on service cord and be within reach of service cord. Refer to Table 1 for proper receptacle and fuse type. Do NOT alter the service cord or plug. Do NOT use an extension cord.
RECEPTACLE	The field supplied outlet must match plug on service cord and be within reach of service cord. Refer to Table 1 for proper receptacle and fuse type. Do NOT alter the service cord or plug. Do NOT use an extension cord.

⚠ WARNING

Electrical Shock Hazard

Turn off electrical power before service or installation.
ALL electrical connections and wiring **MUST** be installed by a qualified electrician and conform to the National Code and all local codes which have jurisdiction.
Failure to do so can result in property damage, personal injury and/or death.

B. Power Cord Information (230/208V models only)

All Friedrich 230/208V PTAC units are shipped from the factory with a Leakage Current Detection Interrupter (LCDI) equipped power cord. The LCDI device meets the UL and NEC requirements for cord connected air conditioners effective August 2004.

To test your power supply cord:

1. Plug power supply cord into a grounded 3 prong outlet.
2. Press RESET.
3. Press TEST (listen for click; Reset button trips and pops out).
4. Press and release RESET (listen for click; Reset button latches and remains in). The power supply cord is ready for operation.

NOTE: The LCDI device is not intended to be used as a switch.

Once plugged in the unit will operate normally without the need to reset the LCDI device.

If the LCDI device fails to trip when tested or if the power supply cord is damaged it must be replaced with a new supply cord obtained from the product manufacturer, and must not be repaired.

Figure 14
Typical LCDI Devices

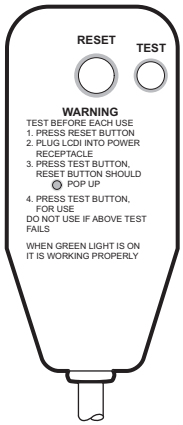

15/20A LCDI Device

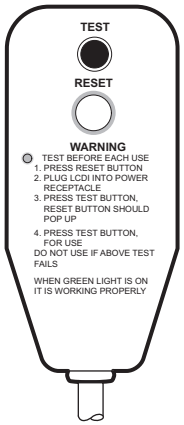

30A LCDI Device

FRP014

Table 2					
Model	Heater kW	Power Cord Kit	Voltage	Amperage	Receptacle
PDE/PDH07K	2.5	PXPC23015A	230/208	15	NEMA 6-15r
	3.5	PXPC23020A (STD)	230/208	20	NEAM 6-20r
PDE/PDH09K	2.5	PXPC23015A	230/208	15	NEMA 6-15r
	3.5	PXPC23020A (STD)	230/208	20	NEMA 6-20r
	5.0	PXPC23030	230/208	30	NEMA 6-30r
PDE/PDH12K	2.5	PXPC23015A	230/208	15	NEMA 6-15r
	3.5	PXPC23020A(STD)	230/208	20	NEMA 6-20r
	5.0	PXPC23030	230/208	30	NEMA 6-30r
PDE/PDH15K	2.5	PXPC23015A	230/208	15	NEMA 6-15r
	3.5	PXPC23020A	230/208	20	NEMA 6-20r
	5.0	PXPC23030 (STD)	230/208	30	NEMA 6-30r
PDE/PDH07R	2.5	PXPC26515A	265	15	NEMA 7-15r
	3.5	PXPC23020A (STD)	265	20	NEMA 7-20r
PDE/PDH09R	2.5	PXPC26515	265	15	NEMA 7-15r
	3.5	PXPC23020A (STD)	265	20	NEMA 7-20r
	5.0	PXPC26530	265	30	NEMA 7-30r
PDE/PDH12R	2.5	PXPC26515A	265	15	NEMA 7-15r
	3.5	PXPC23020A (STD)	265	20	NEMA 7-20r
	5.0	PXPC26530	265	30	NEMA 7-30r
PDE/PDH15R	2.5	PXPC26515A	265	15	NEMA 7-15r
	3.5	PXPC26520A	265	20	NEMA 7-0r
	5.0	PXPC23030 (STD)	265	30	NEMA 7-30r

Electrical Wiring for 265 Volt Models

Power Cord Installation

All 265V PTAC/PTHP units come with a factory installed non-LCDI power cord for use in a subbase. If the unit is to be hard-wired refer to the instructions below.

NOTE: It is recommended that the PXSB subbase assembly, the PXCJA conduit kit (or equivalent) be installed on all hardwire units. If installing a flush-floor mounted unit, make sure the chassis can be removed from the sleeve for service and maintenance.

⚠ WARNING

Electrical Shock Hazard

Turn off electrical power before service or installation.
ALL electrical connections and wiring **MUST** be installed by a qualified electrician and conform to the National Code and all local codes which have jurisdiction.
Failure to do so can result in property damage, personal injury and/or death.

To install the line voltage power leads and conduit to chassis, follow the instructions below and refer to Figures 25-27 on page 19. PXCJA Conduit Kit is required with this setup.

1. Follow the removal process of the chassis's junction box (Figure 25, step 2, page 19).
2. Prepare the 265V (or 230V) power cord for connection to the chassis' power cord connector by cutting the cord to the appropriate length (refer to Figure 26 and follow Figure 15). Power cord harness selection shown on Table 2 on page 14.

Figure 15

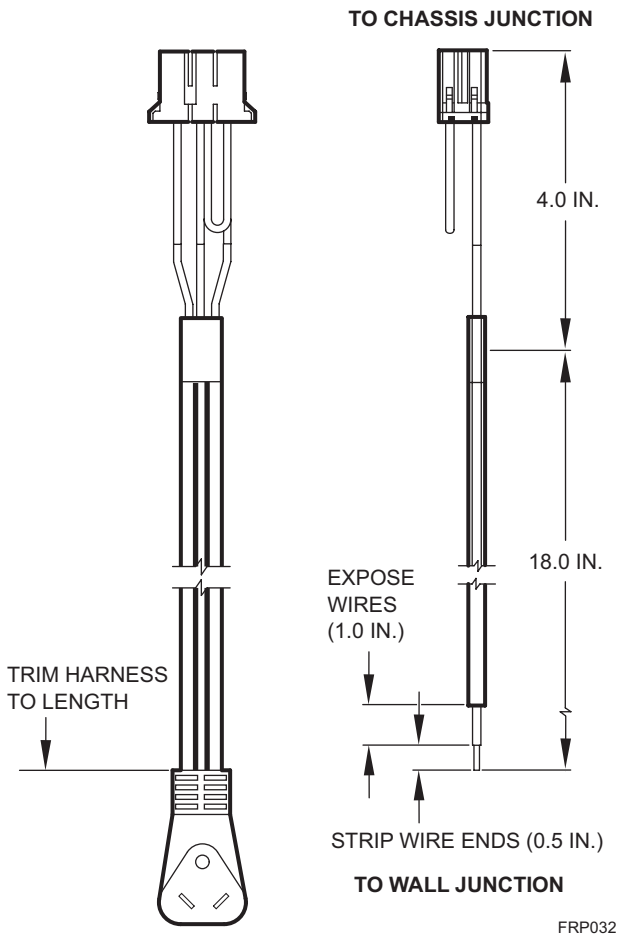

3. Route the cut ends of harness through the conduit connector assembly and flex conduit sleeve. Be sure to use the supplied conduit bushing to prevent damage to the cord by the conduit.

   The cord should pass through the Locknut, Spacer, Chassis Junction Box, Conduit Connector, Bushing, then the Conduit Sleeve. See Figure 17.

4. Route the cut ends of the power cord through the elbow connector at the other end of the conduit. Tighten screws on elbow connector to secure conduit sleeve.

5. Fasten and secure the elbow connector to the wall junction box cover with locknut. Place and mount the wall junction box with the four wall mounting screws making sure to pass the wall lines through the junction box. Connect and join all wall lines with the stripped ends using wire nuts. Tighten both screws of the wall junction box cover to junction box.

6. Follow steps 4-6 on page 19 and refer to Figure 27.

Figure 16

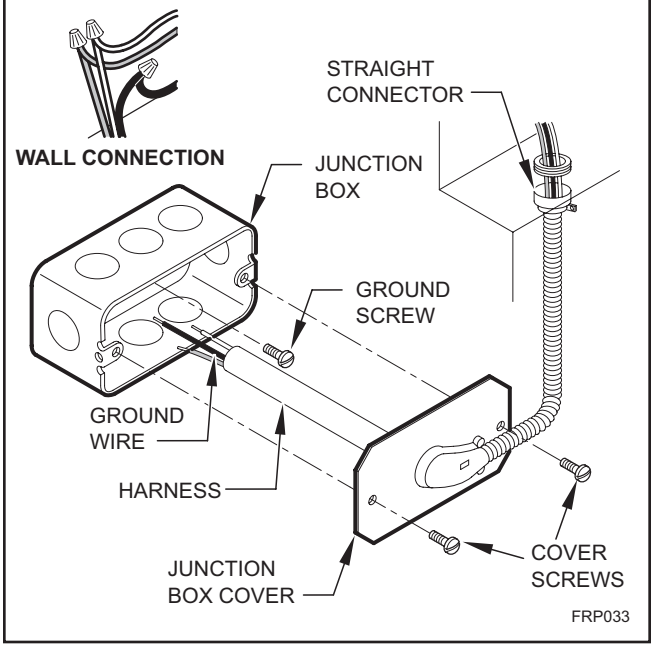

Figure 17

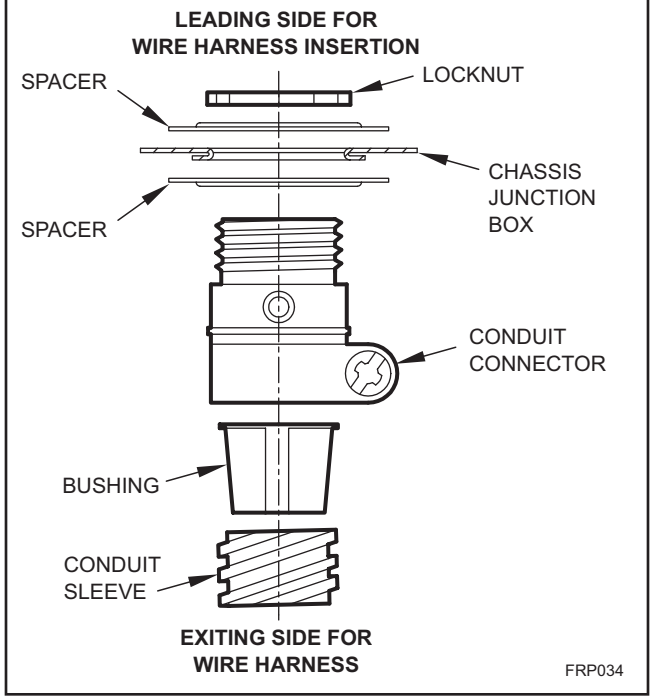

Chassis Install Preparation

Check to be sure the wall sleeve, extension (if used), grille, and drain kit are installed properly before chassis installation.

1. Remove the weatherboard and center support from the sleeve (if still in place). Be sure an outdoor grille is attached.

Figure 18

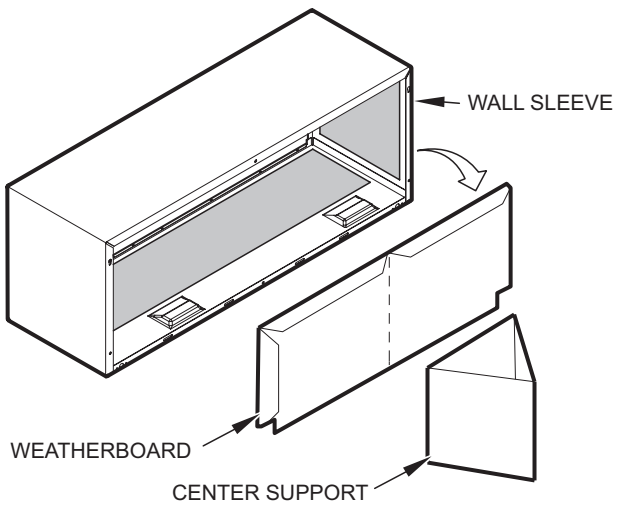

NOTE: Use a wall sleeve adapter kit (PXSE) if installing a P-Series chassis in a T-Series sleeve.

⚠ WARNING

Suffocation Hazards

Keep bag away from babies and children.

Do NOT use in cribs, beds or playpens. Destroy immediately after opening. This bag is NOT a toy.

Failure to do so can result in personal injury and/or death.

2. Remove the front cover contained in a protective plastic bag from chassis. Remove the bag and dispose of it properly.

   If the control door is not installed, follow these steps:
   a. From the front cover, slide the right control door pin into the hole on the right side of the front cover.
   b. Slide the left door pin into the hole on the left side of the front cover opening.
   c. Snap cover into place.

NOTE: To avoid breaking the door or hinge pins, do not apply excessive force when installing.

Figure 19

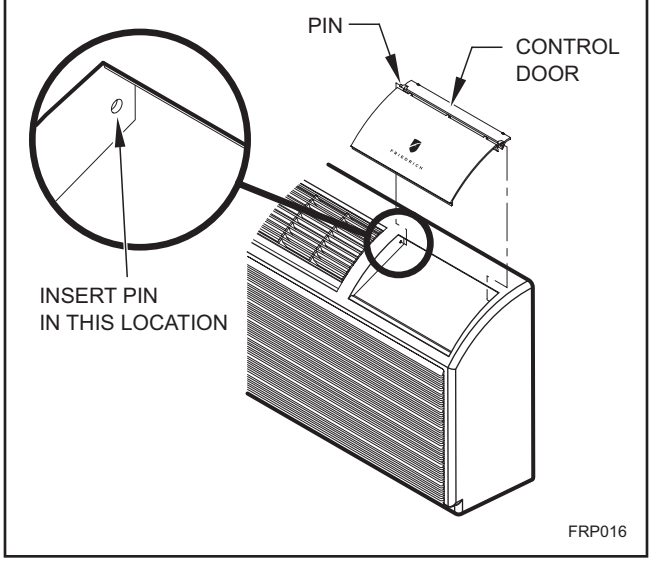

IMPORTANT: When installing a Friedrich PTAC into an existing sleeve, it is important to ensure that the unit is installed completely. Inspection of the air seal between the condenser air baffles and around the indoor mounting flange is recommended.

In some cases additional gaskets or baffling may be required.

CAUTION

Unit Damage Hazard

Failure to follow this caution may result in equipment damage or improper operation.

Failure to remove shipping tape and screw will prevent fresh air vent door from opening and may result in damage to vent door cable.

3. Carefully remove shipping tape from the front panel and vent door. See Figure 20

Figure 20
Shipping Tape Location

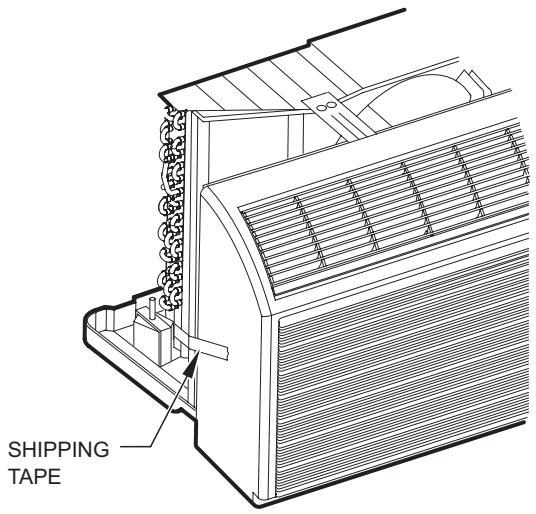

FRP020

4. Remove shipping screw from the vent door, if present. See Fig 21.

Figure 21
Shipping Screw Location

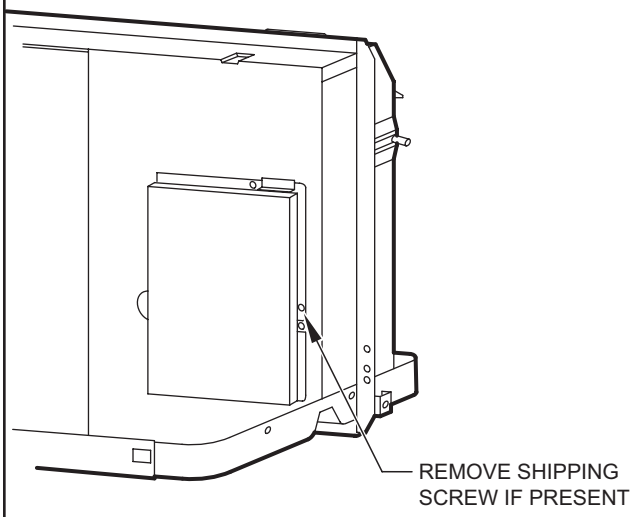

FRP021

5. Remove front panel. See Figure 22.

Figure 22
Removing Front Panel

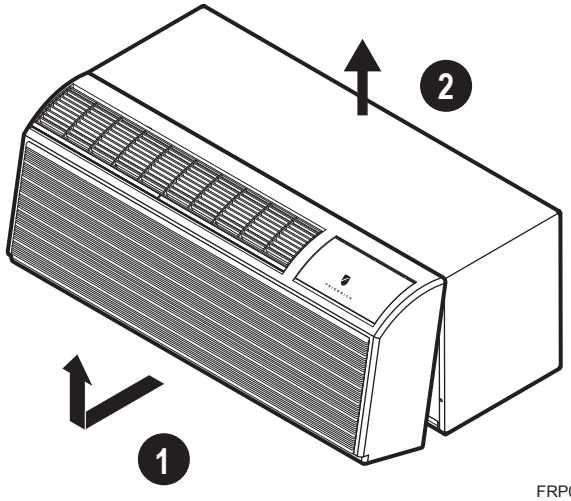

FRP022

Pull out at the bottom to release it from the tabs (1). Then lift up (2).

NOTE: If the unit is mounted flush to the floor, the service cord MUST be rerouted at the bottom of the front cover on the side closest to the receptacle. A notch MUST be made in the front cover side where the cord exits the unit. It is the responsibility of the installer to create an exit notch.

Chassis Installation

1. Lift unit level and slide unit into wall sleeve until from seal rests firmly against front of wall sleeve.

Figure 23
Securing Unit

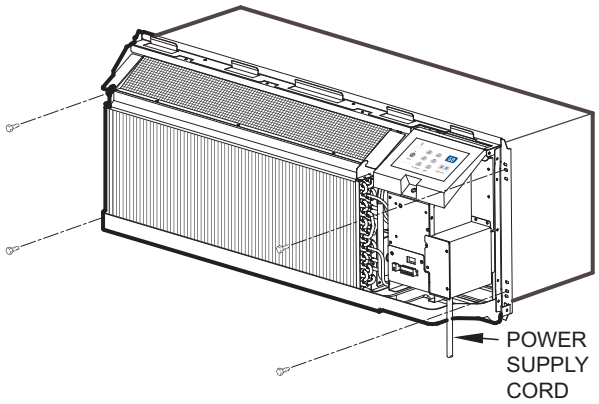

FRP023

2. Locate the four supplied chassis mounting screws. Insert the screws through the chassis mounting flange holes that are aligned with the speed nuts in the wall sleeve. Tighten all four screws (two per side).

Figure 24
Replacing Front Panel

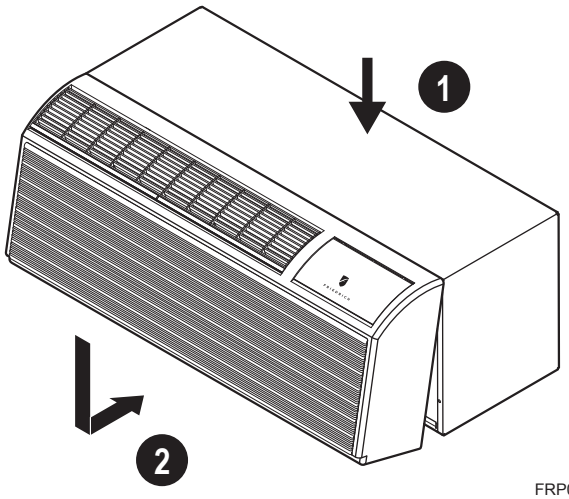

FRP024

3. Place tabs over top rail (1). Push inward at bottom until panel snaps into place (2).
4. Reinstall front panel. See Figure 24.

⚠ CAUTION

Excessive Weight Hazard

Use two or more people when installing your air conditioner.

Failure to do so can result in back or other injury.

NOTICE

Copper refrigerant tubes are NOT handles.
Do NOT use tubing to lift or move chassis.

To remove the front cover, pull the bottom end forward and lift it up to clear the L bracket across the top of the chassis.

5. Plug the cord (if applicable) into the appropriate receptacle. Restore power to the unit.

How To Connect

IMPORTANT: Please read following electrical safety data carefully.

⚠ WARNING

Electrical Shock and/or Unit Operation and Damage Hazard

Failure to follow this warning could result in personal injury or death and/or unit damage.

- Follow the National Electrical Code (NEC) or local codes and ordinances.
- For personal safety, this unit **MUST BE** properly grounded.
- Protective devices (fuses or circuit breakers) acceptable for unit installations are specified on the nameplate of each unit.
- **Do not** use an extension cord with this unit.
- Aluminum wiring in the building may present special problems - consult a qualified electrician.
- **When unit is in STOP position, there is still voltage to the electrical controls.**
- Disconnect power to unit before servicing by:
  1. Removing power cord (if it has one) from wall receptacle.
  2. Removing branch circuit fuses or turning circuit breakers off at panel.

1. Remove front panel. See Figure 22.
2. Remove junction box.
   - Remove junction box cover by removing three screws from front. Remove junction box by taking out top, rear and side screws. See Figure 25.

Figure 25
Junction Box Location

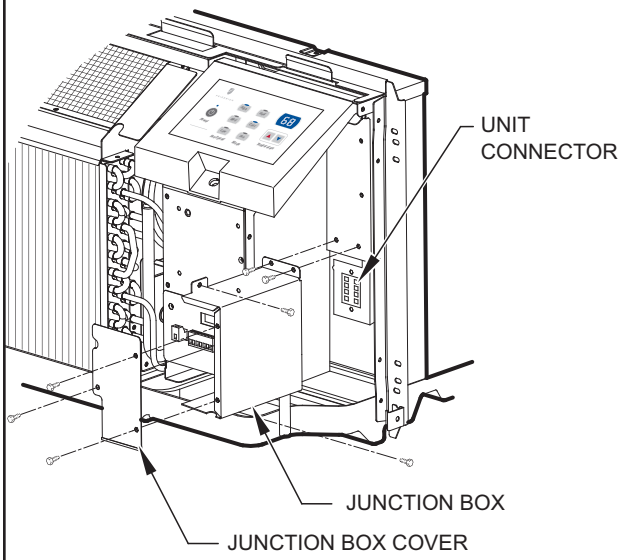

3. Connect accessory power supply cord or hard wire connector to unit connector. See Figure 26.
   - Units must be installed using the appropriate power supply kit. See Table 2 --POWER CONNECTION CHART. These connections must be followed.

Figure 26
Power Connection

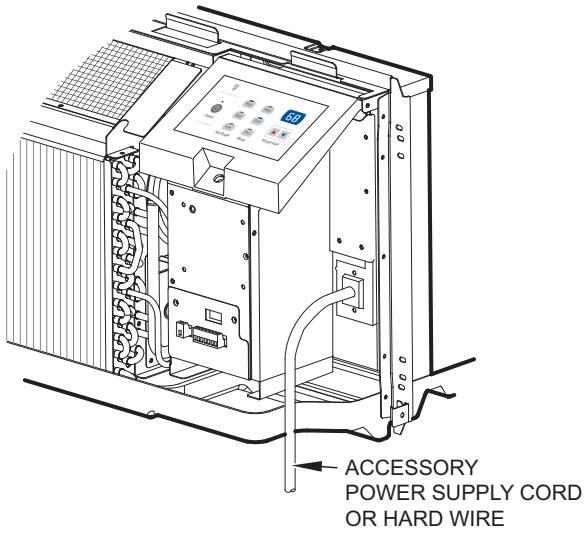

See Table 2 on page 14 for power cord accessory options and ratings.

4. Reinstall junction box and cover.
   - Use wire clamp to attach power cord to basepan. Secure with screws (included) See Figure 27.
   - Replace junction box and cover with screws removed from Step 2. Tighten securely.
5. Replace front panel. See Figure 24.
6. Connect power to unit.

Figure 27
Wire Clamp

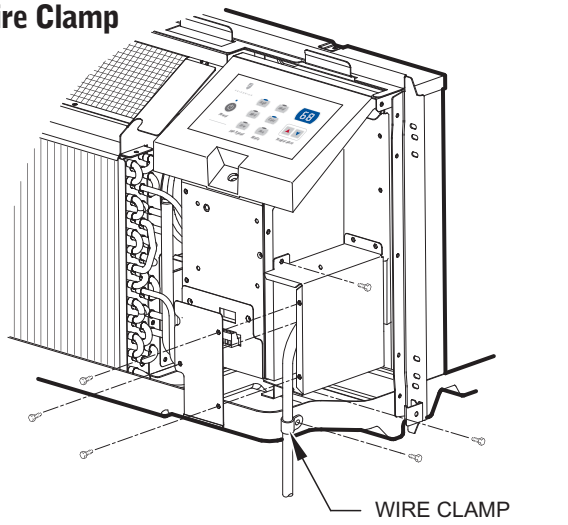

Friedrich PTAC Digital Control and Unit Features

The new Friedrich digital PTAC has state of the art features to improve guest comfort, indoor air quality and conserve energy. Through the use of specifically designed control software for the PTAC industry Friedrich has accomplished what other Manufacturer's have only attempted – a quiet, dependable, affordable and easy to use PTAC.

Below is a list of standard features on every Friedrich PTAC and their benefit to the owner.

Digital Temperature Readout	By digitally monitoring desired room temperature the room is controlled more precisely than conventional systems. The large, easy to read LED display can show either set-point or actual room temperature as selected by owner.
One-Touch Operation	When the unit is powered off the unit can be returned directly to heating or cooling mode by pressing the 'Heat' or 'Cool' buttons without the confusing power up sequence of some controls. One-touch control takes guesswork out of unit control delivering a more enjoyable experience and eliminating front-desk calls.
Fan Speed Mode	The Friedrich PTAC/PTHP units feature two fan speeds and auto mode for the user to select from. This allows the user to properly match the amount of airflow for their comfort level and also deliver's quiet performance.
Individual Mode and Fan Control Buttons	By having separate control buttons and indicators for both fan and mode settings the Friedrich digital control eliminates the confusion of previous digital PTACs. The accurate temperature setting provides greater guest comfort than other systems.
Quiet Start/Stop Fan Delay	The fan start and stop delays prevent abrupt changes in room acoustics due to the compressor energizing or stopping immediately. Upon call for cooling or heating the unit fan will run for five seconds prior to energizing the compressor. Also, the fan off delay allows for "free cooling" by utilizing the already cool indoor coil to its maximum capacity by running for 30 seconds after the compressor.
Two-Speed Wall Thermostat Mode	When connected to a wall thermostat the user can select from high or low fan speed at the thermostat, unlike competitive models that have only one speed selection. This allow more comfortable and quieter operation. Requires the use of Friedrich remote thermostat RT6 or equivalent thermostat with two speed fan output.
Remote Thermostat Operation	Some applications require the use of a wall mounted thermostat. All new Friedrich PTACs may be switched from unit control to remote thermostat control easily without the need to order a special model or accessory kit.
Internal Diagnostic Program	The Friedrich digital PTAC features a self diagnostic program that can alert maintenance to component failures or operating problems. The internal diagnostic program saves properties valuable time when diagnosing running problems.
Service Error Code Storage	The self diagnosis program will also store error codes in memory if certain conditions occur and correct themselves such as extreme high or low operating conditions or activation of the room freeze protection feature. Storing error codes can help properties determine if the unit faced obscure conditions or if an error occurred and corrected itself.
Electronic Temperature Limiting	By limiting the operating range the property can save energy by eliminating "max cool" or "max heat" situations common with older uncontrolled systems. The new electronic control allows owners to set operating ranges for both heating and cooling independently of one another.
Room Freeze Protection	When the PTAC senses that the indoor room temperature has fallen to 40° F the unit will cycle on high fan and the electric strip heat to raise the room temperature to 46° F then cycle off again. This feature works regardless of the mode selected and can be turned off. The control will also store the Room Freeze cycle in the service code memory for retrieval at a later date. This feature ensures that unoccupied rooms do not reach freezing levels where damage can occur to plumbing and fixtures.
Random Compressor Restart	Multiple compressors starting at once can often cause electrical overloads and premature unit failure. The random restart delay eliminates multiple units from starting at once following a power outage or initial power up. The compressor delay will range from 180 to 240 seconds.
Digital Defrost Thermostat	The Friedrich PTAC uses a digital thermostat to accurately monitor the outdoor coil conditions to allow the heat pump to run whenever conditions are correct. Running the PTAC in heat pump mode saves energy and reduces operating costs. The digital thermostat allows maximization of heat pump run time.

Instant Heat Heat Pump Mode	Heat pump models will automatically run the electric heater to quickly bring the room up to temperature when initially energized, then return to heat pump mode. This ensures that the room is brought up to temperature quickly without the usual delay associated with heat pump units.
Even Heat Monitoring	The digital control monitors indoor conditions to ensure that the room temperature is within five degrees of the setpoint. If necessary the unit will cycle the electric heat to maintain the temperature. This feature ensures guest comfort by delivering the heating benefits of an electric heater while maintaining the efficiency benefits of a heat pump.
Separate Heat/Cool Fan Cycle Control	The owner may choose between fan cycling or fan continuous mode based on property preference. (Note: Even heat monitoring and quiet start/stop fan delay only operate in fan cycle mode) Fan continuous mode is used to keep constant airflow circulation in the room during all times the unit is 'ON'. Fan cycle will conserve energy by only operating the fan while the compressor or electric heater is operating. The ability to set the fan cycling condition independently between heating and cooling mode will increase user comfort by allowing the choice of only constantly circulating air in the summer or winter time. Unlike other PTAC brands that only allow one selection.
Emergency Heat Override	In the event of a compressor failure in heat pump mode the compressor may be locked out to provide heat through the resistance heater. This feature ensures that even in the unlikely event of a compressor failure the room temperature can be maintained until the compressor can be serviced.
Desk Control Ready	All Friedrich digital PTACs have low voltage terminals ready to connect a desk control energy management system. Controlling the unit from a remote location like the front desk can reduce energy usage and requires no additional accessories on the PTAC unit.
Indoor Coil Frost Sensor	The frost sensor protects the compressor from damage in the event that airflow is reduced or low outdoor temperatures cause the indoor coil to freeze. When the indoor coil reaches 30° F the compressor is disabled and the fan continues to operate based on demand. Once the coil temperature returns to 45° F the compressor returns to operation.
Ultra-Quiet Air System	The new Friedrich PD series units feature an indoor fan system design that reduces sound levels without lowering airflow and preventing proper air circulation.
High Efficiency	The Friedrich PTAC benefits from quality components and extensive development to ensure a quiet, efficient and dependable unit.
Dual Motor	Friedrich's new dual motor design allows for the quietest and most efficient units yet.
Rotary Compressor	High efficiency rotary compressors are used on all Friedrich PTACs to maximize durability and efficiency.
Stainless Steel Endplates	Outdoor coil endplates made from stainless steel reduce corrosion on the outdoor coil common with other coil designs.
Diamonblue Technology	Diamonblue (seacoast protection) protects the outdoor coil from harsh environments. Comes standard on all PTAC units.
Top Mounted Antimicrobial Air Filters	All Friedrich PTAC return air filters feature an anti-microbial element that has proven to prevent mold and bacterial growth in laboratory testing. PDXRTA replacement filter kits feature the same anti-microbial agent. All filter are washable and reusable and are easily accessed from the top of the unit without the removal of the front cover.
Filtered Fresh Air Intake	Friedrich PTAC units are capable of introducing up to 75 CFM of outside air into the conditioned space. The outdoor air passes through a mesh screen to prevent debris from entering the air stream.

System Configuration

Fresh Air Vent Control

The vent control lever is located on the left side of the unit, behind the front panel.

NOTE: The vent door shipping hardware must be removed before using the vent control lever. See page 17, Figure 21, (Remove Shipping Screw from Vent Door if present).

When vent door is set to CLOSE, only the air inside the room is circulated and filtered, See Figure 28.

When vent door is set to OPEN, some outdoor air will be drawn into room. This may reduce heating or cooling efficiency.

Figure 28

Air Vent Control Location

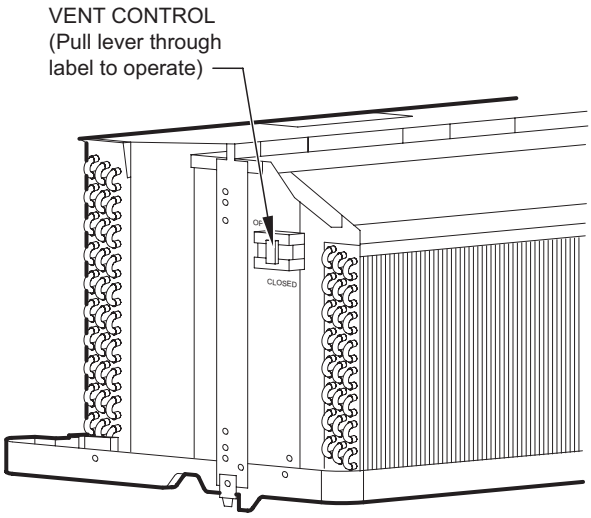

FRP025

Adjusting Air

To adjust air direction:

1. Remove front panel. See Figure 22.
2. Remove louver screws that hold louver insert in place (from back side of front panel). See Figure 29.
3. Turn louver insert and rotate 180°. See Figure 30.
4. Replace louver insert.
5. Replace screws and front panel.

Figure 29

Backside of Front Panel

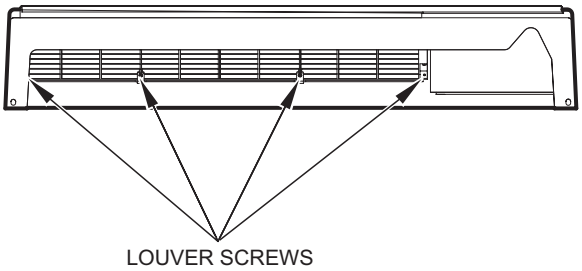

FRP026

Figure 30

Adjusting Louvers

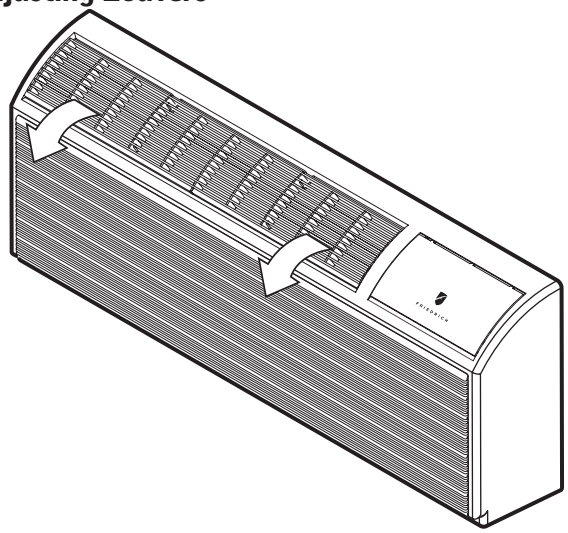

AIR DISCHARGE OUTWARD (Default)

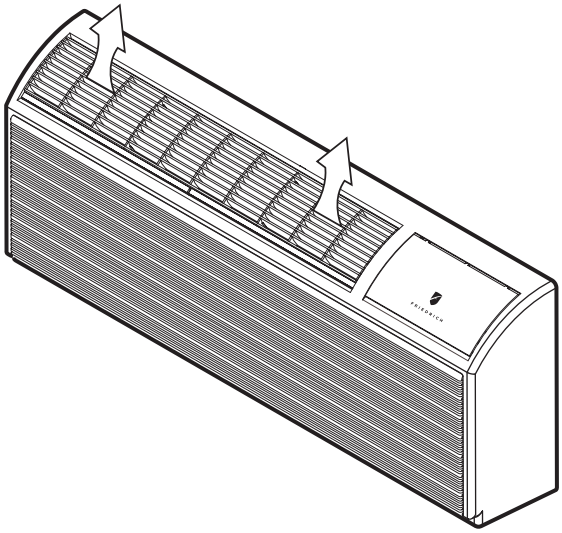

AIR DISCHARGE UPWARD

FRP027

Digital Control User Input Configuration

The adjustable control dip switches are located at the lower left hand portion of the digital Smart Center. The inputs are only visible and accessible with the front cover removed from the PTAC.

Dip Switch Setting

1. Emergency Heat Override – Switch 1
   In the unlikely event of a compressor failure a heat pump unit may be switched to operate in only the electric heat mode until repairs can be made. Moving Dip Switch 1 to ‘ON’.

2. Wall Thermostat Switch 2
   In order to enable the wall thermostat move Dip Switch to 'ON'.

3. Fan Cycle Control – Switch 3-4
   Disabled (Refer to Constant Fan Mode)

4. Electronic Temperature Limiting – Switches 5-6
   The digital control is set from the factory to allow a temperature range between 61° F and 86° F in both heating and cooling mode. Dip Switches 5-6 can be used to set high and low limits for either heating both, cooling both or both.

   From the factory switches are in the down 'OFF' position. The chart below shows the available electronic limiting ranges.

5. Room Freeze Protection – Switch 7
   Units are shipped from the factory with the room freeze protection enabled. Room Freeze Protection can be switched off at the owner’s preference by moving Dip Switch 7 to ‘OFF’. This feature will monitor the indoor room conditions and in the event that the room falls below 40°F the unit will cycle on high fan with the electric heater. This occurs regardless of mode.

Figure 31
Dip Switches

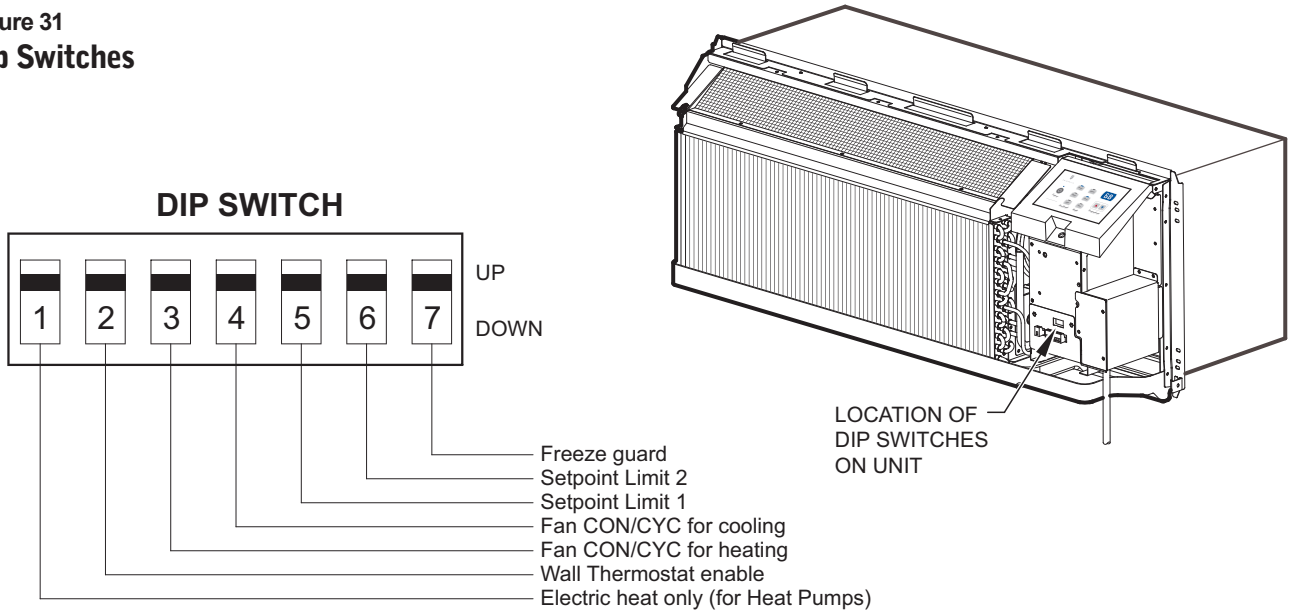

Switch	Description	Function	Factory Setting				Option			
1	Emergency Heat Override for PDH Heat Pump Models	Enables electric heat only operation in the event of a compressor failure on HP models.	Down - Normal Operation				Up - Overrides compressor operation. (PDH models only)			
2	Wall Thermostat Switch	Enables the use of a wall thermostat or unit controls	Down - Unit Controls				Up - Enables Wall Thermostat Usage			
3	Fan Cycle for Heating	Disabled (Refer to Constant Fan Mode)	No Applicable				No Applicable			
4	Fan Cycle for Cooling	Disabled (Refer to Constant Fan Mode)	No Applicable				No Applicable			
5	Setpoint Switch 1	Allows the temperature setpoint range to be adjusted.	Down	61F-86F	Up	63F-80F	Down	65F-78F	Up	68F-75F
6	Setpoint Switch 2		Down	(16C-30C)	Down	(18C-28C)	Up	(19C-26C)	Up	(20C-24C)
7	Room Freeze Protection	Allows the unit to ensure the indoor room temperature does not fall below 40F even when turned off.	Down - Freeze Protection Enabled				Up - Freeze Protection Disabled			

Digital Control Operation

Figure 32
Digital Control Panel

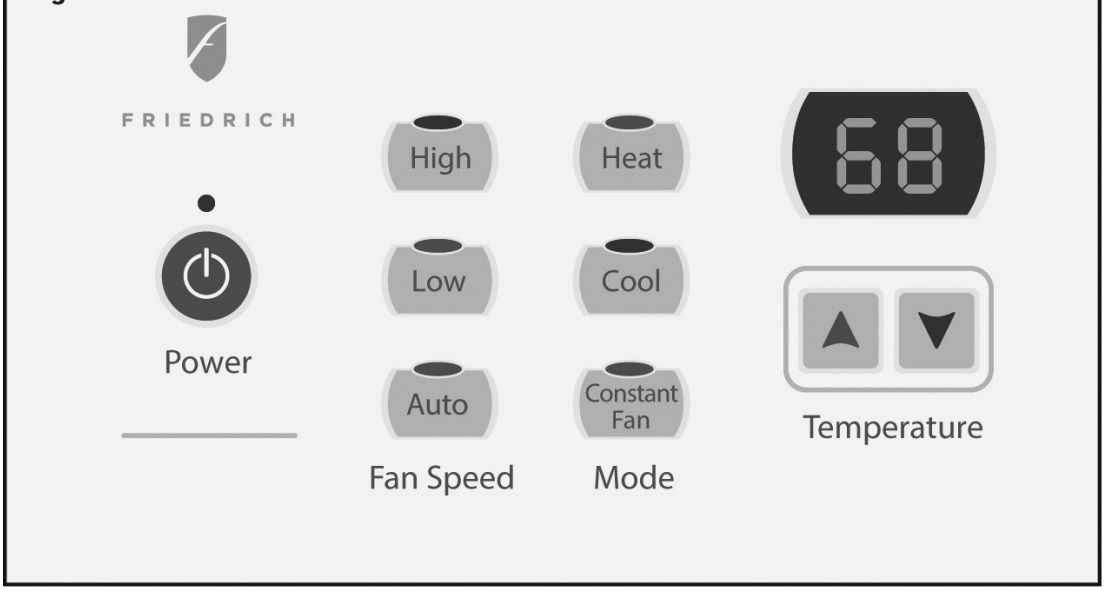

FRP030

°F vs. °C Display

The unit is factory configured to display all temperatures in degrees Fahrenheit (° F). To switch to degrees Celsius press the 'Fan Only' and 'Low Fan' buttons simultaneously for three seconds. The display will show a 'C' as acknowledgement of the change. To revert back to ° F press the 'Fan Only' and 'Low Fan' buttons simultaneously for three seconds. The display will show an 'F' as acknowledgement of the change.

Cooling Mode

Pressing the 'Cool' button while the unit is in any mode, including off, will put the unit into cooling mode. Adjust the temperature readout to the desired room temperature and the unit will cycle the compressor on and off to maintain a comfortable room. The compressor will come on anytime that the room temperature is 1.8° F above the desired temperature. The fan operation is dependent on the fan mode selected, either continuous or cycling. See Constant Fan Mode.

Heating Mode

Pressing the 'Heat' button while the unit is in any mode, including off, will put the unit into heating mode.

Heat Pump Models (PDH)

When the 'Heat' button is pressed initially the unit will energize the electric resistance heat to quickly bring the room to the set temperature. When the desired room temperature falls 1.8° F below the desired set temperature the unit will cycle the compressor on and operate as a heat pump to maintain the room temperature while running more efficiently than resistance heat only models. If the room temperature should fall more than 5° F from the set temperature the unit will run the resistance heater. The fan operation is dependent on the fan mode selected, either continuous or cycling. Dip switch 3 controls the fan mode, see page 23 for setting.

When the outdoor coil temperature falls below 30° F for more than 2 minutes the unit will operate the resistance heaters and not the compressor. When the outdoor coil temperature reaches 45° F the compressor will be allowed to operate again.

Heat/Cool Models (PDE)

After pressing the 'Heat' button, adjust the temperature readout to the desired room temperature and the unit will cycle the resistance heat on and off to maintain a comfortable room. The heater will come on anytime that the room temperature is 1.8° F below the desired temperature. The fan operation is dependent on the fan mode selected, either continuous or cycling. Dip switch 3 controls the fan mode, see page 23 for setting.

Emergency Heat Operation

In the event of a compressor failure in heat pump mode the compressor may be locked out to provide heat through the resistance heater. This feature ensures that even in the unlikely event of a compressor failure the room temperature can be maintained until the compressor can be serviced. Dip switch 1 controls the emergency heat setting, see page 23.

Constant Fan Mode

Pressing the Constant fan mode button will provide constant fan operation in cooling or heating modes. The fan speed selection is made by pressing either "High" or "Low" fan speed button.

Cycle/Continuous (Factory Default)

The owner may choose between fan cycling or fan continuous mode based on property preference (Note: Even heat monitoring and quiet start/stop fan delay only operate in heat mode + cycle mode). Cycle fan will conserve energy by only operating the fan when the call for cooling or heating is required.

Remote Control Thermostat Installation

Install Thermostat

1. Approximately 5 ft. from the floor.
2. Close to or in a frequently used room, preferably on an inside wall.
3. On a section of wall without pipes or ductwork.

The Thermostat should NOT be mounted:

1. Close to a window, on an outside wall, or next to a door leading outside.
2. Where it can be exposed to direct sunlight or heat, such as the sun, a lamp, fireplace, or any ther temperatureradiating object which may cause a false reading.
3. Close to or in the direct airflow of supply registers and/or return air grilles.
4. Any areas with poor air circulation, such as a corner, behind a door, or an alcove.

Remote Thermostat and Low Voltage Control Connections

Remote Thermostat

All Friedrich PZ model PTAC units are factory configured to be controlled by either the chassis mounted Smart Center or a 24V remote wall mounted thermostat. The thermostat may be auto or manual changeover as long as the control configuration matches that of the PTAC unit.

NOTE: All PDE models require a single stage cool, single stage heat thermostat. All PDH models require a single stage cool, dual stage heat thermostat with an O reversing valve control. The Friedrich RT6 thermostat can be configured for either model.

To control the unit with a wall mounted thermostat follow the steps below:

1. Unplug the unit before doing any work.
2. With the front cover removed locate the dip switches located below the Smart Center control panel. See page 23. Switch Dip switch 2 to the up on 'ON' position.
3. Remove the low voltage terminal block from the unit.
4. Connect the corresponding terminals from the wall thermostat to the terminal block.
5. Replace the terminal block on the unit.
6. Restore power to the unit.
7. The unit is now controlled by the wall thermostat only.
8. If the accessory escutcheon kit (PDXRTA) is to be used, install it over the existing control panel.

NOTE: The unit mounted controls no longer control the unit. To restore the unit mounted controls move dip switch 2 to the down or 'OFF' position.

Thermostat Connections

R = 24V Power from Unit

Y = Call for Cooling

W = Call for Heating

O = Reversing Valve Energized in cooling mode (PDH Models Only)

GL = Call for Low Fan

GH = Call for High Fan

C = Common Ground

*If only one G terminal is present on thermostat connect to GL for low speed fan or to GH for high speed fan operation.

Figure 33

Control board with optional PDXRT escutcheon kit installed

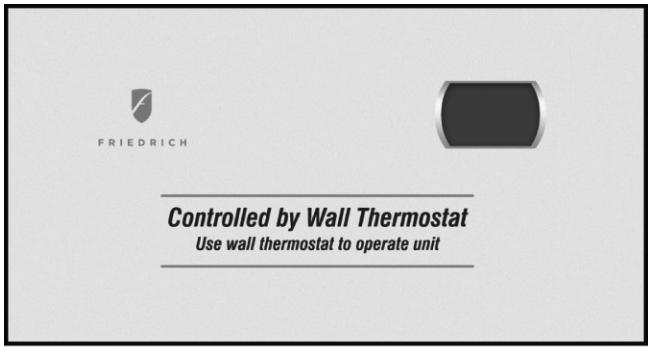

FRP029

Desk Control Terminals

The Friedrich PD model PTAC has built-in provisions for connection to an external switch to control power to the unit. The switch can be a central desk control system or even a normally open door switch.

For desk control operation connect one side of the switch to the D1 terminal and the other to the D2 terminal (See Figure 31, Page 23). Whenever the switch closes the unit operation will stop.

NOTE: The desk control system and switches must be field supplied.

Energy Management

Sometimes known as Front Desk Control, an input is provided so that the unit can be manually disabled from a remote location. If the unit detects 24Vac on this input, it will automatically turn itself off. If no voltage is detected on the input , the unit will run normally.

NOTE: It is the installer's responsibility to ensure that all control wiring connections are made in accordance with the installation instructions. Improper connection of the thermostat control wiring and/or tampering with the unit's internal wiring can void the equipment warranty. Other manufacturer's PTACs and even older Friedrich models may have different control wire connections. Questions concerning proper connections to the unit should be directed to Friedrich.

⚠ WARNING

Electrical Shock Hazard

Turn off electrical power before service or installation.
ALL electrical connections and wiring **MUST** be installed by a qualified electrician and conform to the National Code and all local codes which have jurisdiction.
Improper connection of the thermostat control wiring and/or tampering with the units internal wiring may result in property damage, personal injury or death.

Final Inspection & Start-up Checklist

- ❑ Inspect and ensure that all components and accessories have been installed properly and that they have not been damaged during the installation process.
- ❑ Check the condensate water drain(s) to ensure they are adequate for the removal of condensate water, and that they meet the approval of the end user.
- ❑ Ensure that all installations concerning clearances around the unit have been adhered to. Check to ensure that the unit air filter, indoor coil, and outdoor coil are free from any obstructions.
- ❑ Ensure that the entire installation is in compliance with all applicable national and local codes and ordinances that have jurisdiction.
- ❑ Secure components and accessories, such as the chassis, decorative front cover and control door.
- ❑ Start the unit and check for proper operation of all components in each mode of operation. Instruct the owner or operator of this units operation, and the manufacturer's recommended routine maintenance schedule.

NOTE: A log for recording the dates of maintenance and/or service is recommended.

- ❑ Present the owner or operator of the equipment with the Installation & Operation manual, all accessory installation instructions, and the name, address and telephone number of the Authorized Friedrich Warranty Service Company in the area for future reference if necessary.

Routine Maintenance

To ensure proper unit operation and life expectancy the following maintenance procedures should be performed on a regular basis.

⚠WARNING

Electrical Shock Hazard

Unplug Unit or turn off electrical power to unit prior to performing maintenance procedures.

Failure to do so can result in electrical shock or death.

Air Filter

To ensure proper unit operation, the air filters should be cleaned at least monthly, and more frequently if conditions warrant. The unit must be turned off before the filters are cleaned.

To remove the air filters, grasp the top of the filter and lift out of the front cabinet. Reverse the procedure to reinstall the filters.

Clean the filters with a mild detergent in warm water, and allow them to dry thoroughly before reinstalling.

Coils & Chassis

NOTE: Do not use a caustic coil cleaning agent on coils or base pan. Use a biodegradable cleaning agent and degreaser. The use of harsh cleaning materials may lead to deterioration of the aluminum fins or the coil end plates.

The indoor coil and outdoor coils and base pan should be inspected periodically (annually or semi-annually) and cleaned of all debris (lint, dirt. leaves, paper, etc.) as necessary. Under extreme conditions, more frequent cleaning may by required. Clean the coils and base pan with a soft brush and compressed air or vacuum. A pressure washer may also be used, however, you must be careful not to bend the aluminium fin pack. Use a sweeping up and down motion in the direction of the vertical aluminium fin pack when pressure cleaning coils.

NOTE: It is extremely important to insure that none of the electrical and/or electronic parts of the unit get wet. Be sure to cover all electrical components to protect them from water or spray.

Decorative Front

The decorative front and discharge air grille may be cleaned with a mild soap or detergent. Do NOT use solvents or hydrocarbon based cleaners such as acetone, naphtha, gasoline, benzene, etc., to clean the decorative front or air discharge grilles.

Use a damp (not wet) cloth when cleaning the control area to prevent water from entering the unit, and possibly damaging the electronic control.

Fan Motor & Compressor

The fan motor & compressor and are permanently lubricated, and require no additional lubrication.

Wall Sleeve

Inspect the inside of the wall sleeve and drain system periodically (annually or semi-annually) and clean as required.

Under extreme conditions, more frequent cleaning may be necessary. Clean both of these areas with an antibacterial and antifungal cleaner. Rinse both items thoroughly with water and ensure that the drain outlets are operating correctly. Check the sealant around the sleeve and reseal areas as needed.

Basic Troubleshooting

COMPLAINT	CAUSE	SOLUTION
Unit does not operate.	• Unit turned off.	• Turn unit on
	• Thermostat is satisfied.	• Raise/Lower temperature setting.
	• LCDI power cord is unplugged.	• Plug into a properly grounded 3 prong receptacle. See "Electrical Rating Tables" on page 13 for the proper receptacle type for your unit.
	• LCDI power cord has tripped.	• Press and release RESET (listen for click; Reset button latches and remains in) to resume operation.
	• Circuit breaker has tripped.	• Reset the circuit breaker.
	• Supply circuit fuse has blown.	• Replace the fuse.
	• Local power failure.	• Unit will resume normal operation once power has been restored.
Unit trips circuit breaker or blows fuses.	• Other appliances being used on same circuit.	• The unit requires a single outlet circuit, not shared with other appliances.
	• An extension cord is being used.	• Do NOT use an extension cord with this or any other air conditioner.
	• Circuit breaker or time-delay fuse isn't of the proper rating.	• Replace circuit breaker or time-delay fuse for the proper rating. See "Electrical Rating Tables" on page 13. If problem continues contact a licensed electrician.
LCDI Power Cord Trips (Reset Button Pops Out) NOTE: A damaged power supply cord must be replaced with a new power supply cord obtained from the product manufacturer and must not be repaired.	• The LCDI Power cord can trip (Reset button POPS out) due to disturbances on your power supply line.	• Press and release RESET (listen for click; Reset button latches and remains in) to resume normal operation.
	• Electrical overload, overheating or cord pinching can trip (Reset button POPS out) the LCDI power cord.	• Once the problem has been determined and corrected, press and release RESET (listen for click; Reset button latches and remains in) to resume normal operation.
Unit does not cool/heat room sufficiently, or cycles on and off too frequently	• The return/discharge air grille is blocked.	• Ensure that the return and/or discharge air paths are not blocked by curtains, blinds, furniture, etc
	• Windows or doors to the outside are open.	• Ensure that all windows and doors are closed.
	• The temperature is not set at a cool enough/warm enough setting.	• Adjust the temperature control to a cooler or warmer setting as necessary.
	• The filter is dirty or obstructed.	• Clean the filter, (See Recommended Maintenance) or remove obstruction.
	• The indoor coil or outdoor coil is dirty or obstructed.	• Clean the coils, (See Recommended Maintenance) or remove obstruction.
	• The temperature of the room you are trying to cool is extremely hot.	• Allow additional time too cool a very hot room
	• The outside temperature is below 60º F.	• Do not try to operate your air conditioner in the cooling in the cooling mode when the outside temperature is below 60º F. The unit will not cool properly, and the unit may be damaged.
	• The digital control is set to fan cycling mode.	• Since the fan does not circulate the room air continuously at this setting, the room air does not mix as well and hot (or cold) spots may result. Using the continuous fan setting is recommended to obtain optimum comfort levels.
	• The air conditioner has insufficient cooling capacity to match the heat gain of the room.	• Check the cooling capacity of your unit to ensure it is properly sized for the room in which it is installed. Room air conditioners are not designed to cool multiple rooms.

COMPLAINT	CAUSE	SOLUTION
Unit does not cool/heat room sufficiently, or cycles on and off too frequently	• The air conditioner has insufficient heating capacity to match the heat loss of the room.	• Check the heating capacity of your unit. Air conditioners are sized to meet the cooling load and heater size is then selected to meet the heating load. In extreme, northern climates, room air conditioners may not be able to be used as a primary source of heat.
Unit runs too much	• This may be due to an excessive heat load in the room. • This may be normal for higher efficiency (EER) air conditioners.	• If there are heat product appliances in use in the room, or if the room is heavily occupied, the unit will need to run loner to remove the additional heat. • Be sure to use exhaust vent fans while cooking or bathing and, if possible, try not to use heat producing appliances during the hottest part of the day. It may also be due to an improperly sized unit. • Depending upon the size of the room being cooled, a higher capacity air conditioner may be necessary • The use of higher efficiency components in your new air conditioner may result in the unit running longer than you feel it should . This may be more apparent, if it replaced an older, less efficient, model. The actual energy usage, however, will be significantly less when compared to older models. • Likewise, you may notice that the discharge air temperature of your new air conditioner may not seem as cold as you may be accustomed to from older units. This does not, however, indicate a reduction in the cooling capacity of the unit • The energy efficiency ratio (EER) and cooling rating (Btu/h) listed on the unit's rating plate are both agency certified.

Service & Assistance

Before calling for service, please check the "Basic Troubleshooting" section above. This may help you to find the answer to your problem, avoid unnecessary service calls, and save you the cost of a service call if the problem is not due to the product itself. If you have checked the "Basic Troubleshooting" section and still need help, here is a list of available services:

You can find the name of you local Authorized Service Provider by visiting our web site at www.friedrich.com.

If you require further assistance you can call the Customer Support Call Center at 1-800-541-6645.

Before calling, please make sure that you have the complete model and serial number, and date of purchase of your equipment available. By providing us with this information we will be better able to assist you.

Our specialists are able to assist you with:

* Inspect and ensure that all components and accessories have been installed properly and that they have not been damaged during the installation.
* Specifications and Features of our equipment
* Referrals to dealers, and distributors.
* Use and Care information
* Recommended maintenance procedures
* Installation information
* Referrals to Authorized Service Providers and Parts depots.

Accessories

New Construction Accessories		
PDXWSA PDXWSEXT	WALL SLEEVE Galvanized zinc coated steel is prepared in an 11-step process, then powder coated with a polyester finish and cured in an oven for exceptional durability. The wall sleeve is insulated for sound absorption and thermal efficiency, 16" High x 42" Wide x 13 3/4" Deep. DEEP WALL SLEEVE EXTENSION For use when the wall is thicker than 13 1/4"deep. The wall sleeve may be special ordered through your Sales Representative and will be cut to your specific depth requirements..	
PXGA	GRILLE Standard, stamped aluminium, anodized to resist chalking and oxidation.	
PXAA PXBG PXSC	ARCHITECTURAL GRILLES Consist of heavy-gauge 6063-T5 aluminum alloy: PXAA – Clear, extruded aluminum PXBG – Beige acrylic enamel PXSC – Also available in custom colors.	
PXSE	SLEEVE EXTENSION RETROFIT KIT Galvanized zinc coated steel, 2.4" sleeve extension attached to the room side of the sleeve to allow for the installation of a PD-Series Friedrich PTAC in a T-Series sleeve.	
PXSBA	DECORATIVE SUBBASE Provides unit support for walls less than six inches thick. Includes leveling legs, side filler panels and mounting brackets for electrical accessories. Accepts circuit breaker, power disconnect switch, or conduit kit.	
	ELECTRICAL SUBBASE Provides unit support for walls less than six inches thick. Includes leveling legs, side filler panels, mounting brackets, a plug-in receptacle and field-wiring access. The subbase also includes electrical knockouts for a power disconnect switch or circiut breaker. PXSB23020 - Electrical Subbase - 230V 15 & 20A PXSB23030 - Electrical Subbase - 230V 30A PXSB26515 - Electrical Subbase - 265V 15A PXSB26520 - Electrical Subbase - 265V 20A PXSB26530 - Electrical Subbase - 265V 30A	
POWER CORDS	PXPC23015A LCDI 230V 15A Cord - 2.5 kW 6 ft. length PXPC23020A LCDI 230V 20A Cord - 3.5 kW 6 ft. length PXPC23030 LCDI 230V 30A Cord - 5.0 kW 6 ft. length PXPC26515A Non-LCDI 265V 15A Cord - 2.5 kW 18 inch length PXPC26520A Non-LCDI 265V 20A Cord - 3.5 kW 18 inch length PXPC26530 Non-LCDI 265V 30A Cord - 5.0 kW 18 inch length	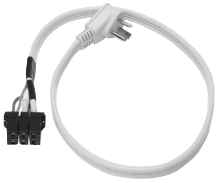
PXCJA	CONDUIT KIT WITH JUNCTION BOX Hard wire conduit kit with junction box for 208/230V and 265V units (subbase not required). Kit includes a means of quick disconnect for easy removal of the chassis. *Required for 265V installations.	

New Construction Accessories		
PDXDAA	LATERAL DUCT ADAPTER Attaches to the Friedrich PTAC/PTHP unit to direct up to 35% of the total airflow to a second room. The unit mounted duct plenum features a front mounted aluminum grille that has two positions to provide the most optimal air direction. The air may be directed to either the left or the right of the unit through the supplied 3.5 H" x 7 W" x 47" L plenum. Plenum may be cut to length by the installer. Kit includes duct plenum, front grille, 47" duct extension, duct discharge grille, duct end cap and all necessary mounting hardware.	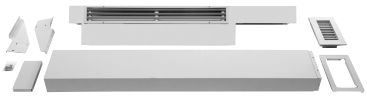
PDXDEA	LATERAL DUCT EXTENSION Additional 3.5 H" x 7" W x 47" L plenum for use with the LATERAL DUCT ADAPTER. A maximum of 3 duct extensions total may be used. Note: Ducted airflow is reduced as duct length is increased.	
PXFTA	REPLACEMENT FILTER PACK These are original equipment return air filters. They are reusable and can be cleaned by vacuuming, washing, or blowing out, and are sold in convenient ten-packs. (Two filters per chassis).	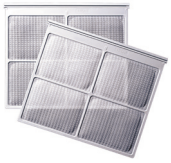
PXDR10	CONDENSATE DRAIN KIT Attaches to the bottom of the wall sleeve for internal draining of condensate or to the rear wall sleeve flange for external draining. Recommended on all units to remove excess condensate. Packaged in quantities of ten.	
RT6	DIGITAL REMOTE WALL THERMOSTAT Single stage cool, single stage heat for PDE models or single stage cool, dual stage heat for PDH model thermostat features high/low fan speed switch. Thermostat is hard wired and can be battery powered or unit powered. Features backlit display and multiple configuration modes. For use on PD-series Friedrich PTACs and Vert-I-Paks.	
WRT1	DIGITAL THERMOSTAT Wireless, single stage, wall-mounted digital thermostat with two fan speeds. Features backlit display and multiple configuration modes.	
PDXRTA	REMOTE THERMOSTAT ESCUTCHEON KIT This kit contains ten escutcheons that can be placed over the factory control buttons when a remote wall mounted thermostat is used. The escutcheon directs the guest to the wall thermostat for operation and retains the LED window to display error codes and diagnostic information.	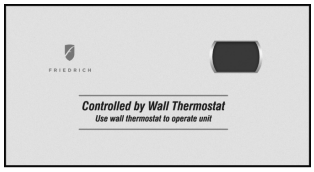
	FRIEDRICHLINK® ENERGY MANAGEMENT THERMOSTAT Integrated occupancy sensor uses a combination of motion and thermal sensing technologies for accurate occupancy detection. Reliable occupancy detection allows saving energy when rooms are unoccupied. Energy saving presets eliminate the guesswork and make it easy to adjust the energy saving settings.	
EMWRT1	Wireless thermostat with occupancy sensor.	
EMRT1	Wired thermostat with occupancy sensor.	

Friedrich Air Conditioning Company
10001 Reunion Place, Suite 500
San Antonio, TX 78216
800.541.6645
www.friedrich.com

PD-SERIES
PACKAGED TERMINAL AIR CONDITIONERS
LIMITED WARRANTY

SAVE THIS CERTIFICATE. It gives you specific rights. You may also have other rights which may vary from state to state and province to province.

In the event that your unit needs servicing, contact your nearest authorized service center. If you do not know the nearest service center, ask the company that installed your unit or contact us - see address and telephone number above. To obtain service and/or warranty parts replacement, you must notify an authorized FRIEDRICH Air Conditioning Co. service center, distributor, dealer, or contractor of any defect within the applicable warranty period.

When requesting service: please have the model and serial number from your unit readily available.

Unless specified otherwise herein, the following applies:
FRIEDRICH PACKAGED TERMINAL AIR CONDITIONERS AND HEAT PUMPS

LIMITED WARRANTY - TWO YEAR (Twenty Four (24) months from the date of installation). Any part found to be defective in the material or workmanship will be repaired or replaced free of charge by our authorized service center during the normal working hours; and

LIMITED WARRANTY - THIRD THROUGH FIFTH YEAR (Sixty (60) months from the date of installation). ON THE SEALED REFRIGERATION SYSTEM. Any part of the sealed refrigeration system that is defective in material or workmanship will be repaired or replaced free of charge (excluding freight charges) by our authorized service center during normal working hours. The sealed refrigeration system consists of the compressor, metering device, evaporator, condenser, reversing valve, check valve, and the interconnecting tubing.

These warranties apply only while the unit remains at the original site and only to units installed inside the continental United States, Alaska, Hawaii, Puerto Rico, Mexico and Canada. The warranty applies only if the unit is installed and operated in accordance with the printed instructions and in compliance with applicable local installation and building codes and good trade practices. For international warranty information, contact the Friedrich Air Conditioning Company - International Division.

Any defective part to be replaced must be made available to **FRIEDRICH** in exchange for the replacement part. Reasonable proof must be presented to establish the date of install, otherwise the beginning date of this certificate will be considered to be our shipment date plus sixty days. Replacement parts can be new or remanufactured. Replacement parts and labor are only warranted for any unused portion of the unit's warranty.

We will not be responsible for and the user will pay for:

1. Service calls to:
   A) Instruct on unit operation. B) Replace house fuses or correct house wiring. C) Clean or replace air filters. D) Remove the unit from its installed location when not accessible for service required. E) Correct improper installations.

2. Parts or labor provided by anyone other than an authorized service center.

3. Damage caused by:
   A) Accident, abuse, negligence, misuse, riot, fire, flood, or acts of God. B) Operating the unit where there is a corrosive atmosphere containing chlorine, fluorine, or any damaging chemicals (other than in a normal residential environment). C) Unauthorized alteration or repair of the unit, which in turn affects its stability or performance. D) Failing to provide proper maintenance and service. E) Using an incorrect power source. F) Faulty installation or application of the unit.

We shall not be liable for any incidental, consequential, or special damages or expenses in connection with any use or failure of this unit. We have not made and do not make any representation or warranty of fitness for a particular use or purpose and there is no implied condition of fitness for a particular use or purpose. We make no expressed warranties except as stated in this certificate. No one is authorized to change this certificate or to create for us any other obligation or liability in connection with this unit. Any implied warranties shall last for one year after the original purchase date. Some states and provinces do not allow limitations on how long an implied warranty or condition lasts, so the above limitations or exclusions may not apply to you. The provisions of this warranty are in addition to and not a modification of or subtraction from the statutory warranties and other rights and remedies provided by law.

Performance of Friedrich's Warranty obligation is limited to one of the following methods:

1. Repair of the unit
2. A refund to the customer for the prorated value of the unit based upon the remaining warranty period of the unit.
3. Providing a replacement unit of equal value

The method of fulfillment of the warranty obligation is at the sole discretion of Friedrich Air Conditioning.

In case of any questions regarding the provisions of this warranty, the English version will govern.

(9-14)

Friedrich Air Conditioning Co.
10001 Reunion Place, Suite 500 • San Antonio, Texas 78216
(210) 546-0500
www.friedrich.com

Printed in the U.S.A.

This file was downloaded from the site
mans.io

Instruction manuals and user guides

Samsung
Pioneer
Alpine
LG
Dell
Sharp
Sony
Philips
Epson
Netgear