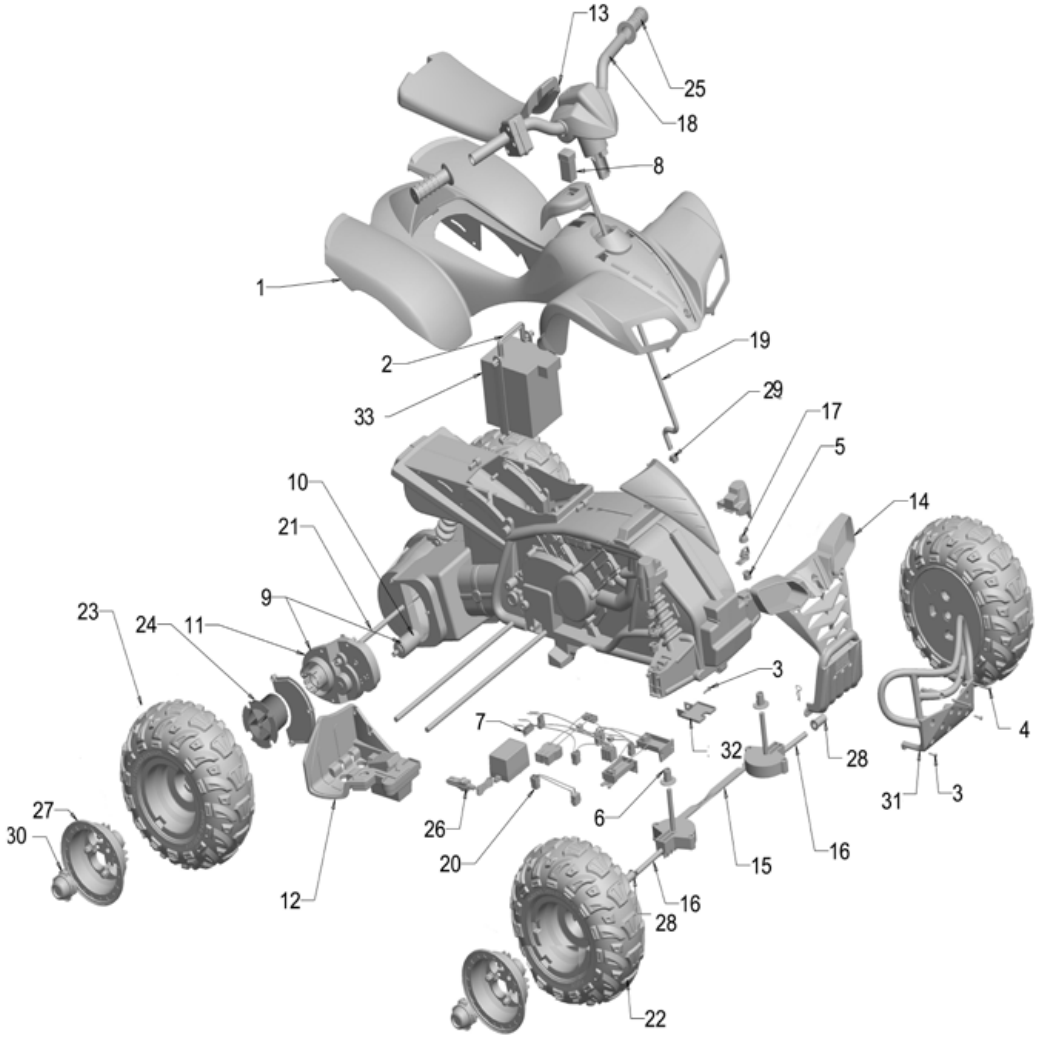

X6641 Kawasaki KFX PW Advanced	
Age Range:	3 years and up
Weight Limit:	65 lbs
Surfaces:	Hard and Grass Surfaces
Speed:	3 MPH Forward/Reverse
	6 MPH Forward
Colors:	Green w/ Black handle and seat
Intro:	2013
Suggested Retail:	$231.21
Box Dimensions:	19.63"X25.13"X40.75"
Warranty:	One Year Vehicle
	Six Months Battery

Item	Part #	Description	QTY
1	N/A	Body	
2	B9272-2419	Battery Retainer	1
3	00912-8001	#8 3/4" screw	4
4	00912-8008	#8 2 inch screw	2
5	J8472-2639	Upper Bushing Kawasaki KFX	1
6	J8472-2649	Lower Bushing Kawasaki KFX	2
7	**X6651-9799**	**Wiring Harness for KFX**	**1**
8	00801-1773	Control Switch F/R - w/white buttons	1
9	**00968-2951**	**Motor Gearbox Assembly**	**2**
10	**00968-2729**	**Motor Pinion**	**2**
11	**00968-2821**	**# 7R Gearbox**	**2**
12	3900-1030	Footboard Assembly	1
13	B9272-9169	Seat for KFX	1
14	W4715-9369	Front Clip Assembly for KFX (gray)	1
15	J8472-9060D	Steering Linkage	1
16	P5066-4519	Front Axle (threaded) for KFX	2
17	00801-1621	Cap (retainer .437) - Black	2
18	W5540-9729	Handlebar Assembly for KFX	1
19	N/A	Steering Column	
20	**P5066-9659**	**Turbo Switch w/Wiring Harness for KFX**	**1**
21	P5066-4509	Rear Axle (threaded) for Barbie KFX	1
22	B9272-2339	Front Wheel for Kawasaki KFX (black)	2
23	B9272-2269	Rear Wheel for Kawasaki KFX (black)	2
24	74460-2249	Wheel Driver 10 RIB	2
25	J5248-2439	Handgrip for Brute Force	2
26	00801-1778	12 Volt Charger w/Probe	1
27	W4715-6459	Wheel Cover	4
28	73610-2689	Bushing .437 Long Black	4
29	00801-1620	Steering Column Cap (Fastner .354) Blk.	1
30	W4715-6959	Hubcap	4
31	X6651-2259	Brush Guard for KFX	1
32	J8472-2859	Steering Column Plate	1
33	00801-1869	12 Volt battery	1

Parts Not Shown

Part #	Description	QTY
P5066-9289	Hardware Bag for Barbie KFX	1
00801-1503	PW Emblem	1
00801-1567	Wrench 9/16" (Assembly Tool)	1
X6641-0320	Label Sheet for KFX	1
X6641-0720	Manual for KFX	1
X6641-9379	Parts Bag for KFX	1
00801-0697	**Switch Signalux - 2 prong**	**1**
00801-2039	**Footswitch - (plunger type)**	**1**
74287-9739	**PC Board**	**1**
00905-0116	3/8" - 16 Lock Nut	4

Bold and underlined parts are to be purchased and installed by Service Centers only. These items may not be sold directly to consumers by Service Centers or Fisher-Price.

9/8/2016 11:28