This Owner's Manual is provided and hosted by Appliance Factory Parts.

Appliance Factory Parts
Experts in BBQ, Humidifier, & Appliance Parts
1-800-955-7075

FISHER PRICE X3414 Owner's Manual

Shop genuine replacement parts for FISHER PRICE X3414

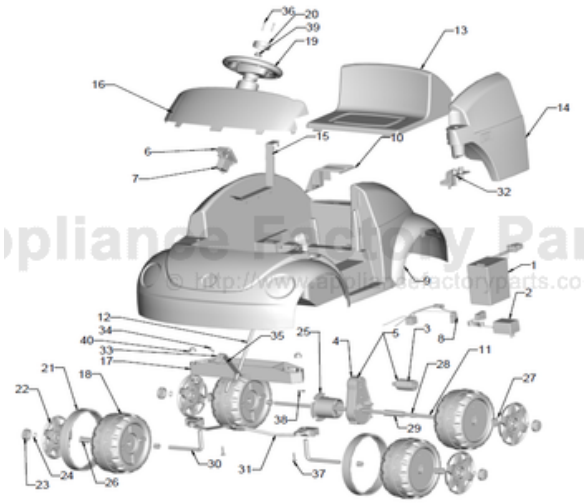

Find Your FISHER PRICE Ride On Parts - Select From 999 Models

-------- Manual continues below --------

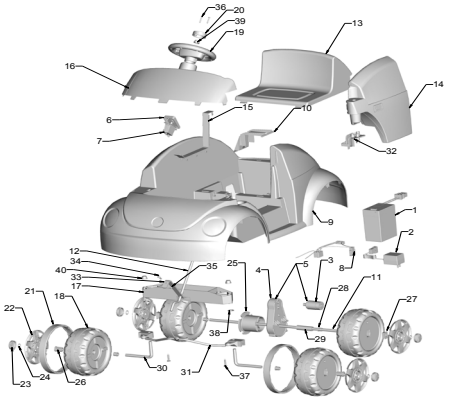

X3414
BARBIE VW BEETLE
Preschool Series

Age Range:	1 1/2-4 Years
Weight Limit:	50 lbs.
Surfaces:	Grass/Asphalt/Hard
Speed:	2.5 For/Rev
Colors:	Pink Body/Red Seat
Intro:	2011
Suggested Retail:	$129.99
Box Dimensions:	15.9 x 23.1 x 36.8; 34 lbs
Warranty:	One Year Vehicle
	Six Months Battery

ITEM	PART #	DESCRIPTION	QTY	ITEM	PART #	DESCRIPTION	QTY
1	00801-1457	6V BATTERY 4 AMP	1	27	77410-2679	DRIVE BUSHING (RECTANGULAR)	2
2	00801-1781	6V FUSED CHARGER	1	28	74550-2689	AXLE BUSHING (ROUND)	6
3	**N\A**	**MOTOR PINION**	1	29	73510-2369	WHEEL SPACER	1
4	**74550-9279**	**GEARBOX**	1	30	73510-4509	FRONT AXLE	2
5	**00968-1900**	**MOTOR GEARBOX ASSY.**	1	31	N\A	STEERING LINKAGE ASSY.	1
6	N\A	FOOTBOARD ASSY.	1	32	M3865-2769	HINGE PLATE	1
7	**00801-1761**	**FOOTSWITCH**	1	33	73510-4069	BUMPER BRACE (BRACKET)	1
8	**P5921-9799**	**MAIN HARNESS**	1	34	N\A	10-32 X 3/4 MACHINE SCREW	1
9	N\A	BODY	1	35	0801-0318	10-32 NYLOK NUT	1
10	M3865-2289	BATTERY RETAINER	1	36	N\A	6 X 1" SCREW	2
11	73518-4519	REAR AXLE	1	37	N\A	1/4 X 1 1/4 SCREW	2
12	73510-4239	STEERING COLUMN	1	38	0801-0196	7/16" LARGE WASHER	5
13	M3865-9309	SEAT w/LOCK	1	39	0801-0548	.354 CAP NUT	1
14	M3865-9359	DOOR ASSY.	1	40	0801-0226	.437 CAP NUT	6
15	N\A	CHANNEL COVER	1		**Parts Not Shown**		
16	M3865-2619	WINDSHIELD	1		M3865-0311	LABEL SHEET	1
17	73510-2759	STEERING LINKAGE COVER	1		P6830-0320	SMALL LABEL SHEET	1
18	73510-2159	WHEEL	4		P6830-0920	OWNERS MANUAL	1
19	M3865-9719	STEERING WHEEL ASSY.	1		00801-1773	F/R CONTROL SWITCH	1
20	M3865-2739	STEERING WHEEL BUTTON	1		00801-1503	PW EMBLEM	1
21	73510-2479	TRACTION BAND	2		73510-2399	CAP NUT TOOL	1
22	73510-2499	HUBCAP	4		N3964-9469	HARDWARE BAG	1
23	73510-2489	HUBCAP COVER	4		P6830-9130	PARTS BAG	1
24							
25	74460-2249	DRIVER	1				
26	73233-2559	HEX BUSHING	2				

12/27/2008

Bold and underlined parts are to be purchased and installed by Service Centers only. These items may not be sold directly to consumers by Service Centers or Fisher-Price.