This Owner's Manual is provided and hosted by Appliance Factory Parts.

Appliance Factory Parts
Experts in BBQ, Humidifier, & Appliance Parts
1-800-955-7075

FISHER PRICE G4882 Owner's Manual

Shop genuine replacement parts for FISHER PRICE G4882

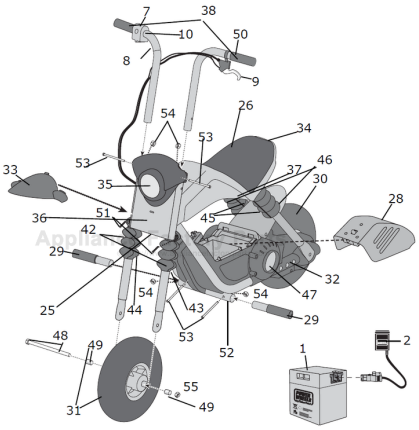

Find Your FISHER PRICE Ride On Parts - Select From 999 Models

-------- Manual continues below --------

Age Range:	6 and up
Weight Limit:	150 lbs.
Surfaces:	Hard surface/ Grass
Speed:	7 mph
Colors:	Green/silver/black
Intro:	2003
Suggested Retail:	$199.99
Box Dimensions:	21.75 x 10.62 X 35.75
	54.3 lbs
Warranty	One Year Vehicle
	6 Months Battery

73535 & G4647 B2222 & G4882 Canada

Minibike

73535 May Be Under Recall. Please Confirm That Product is Modified Or Remediated In Accordance With Recall Policy.

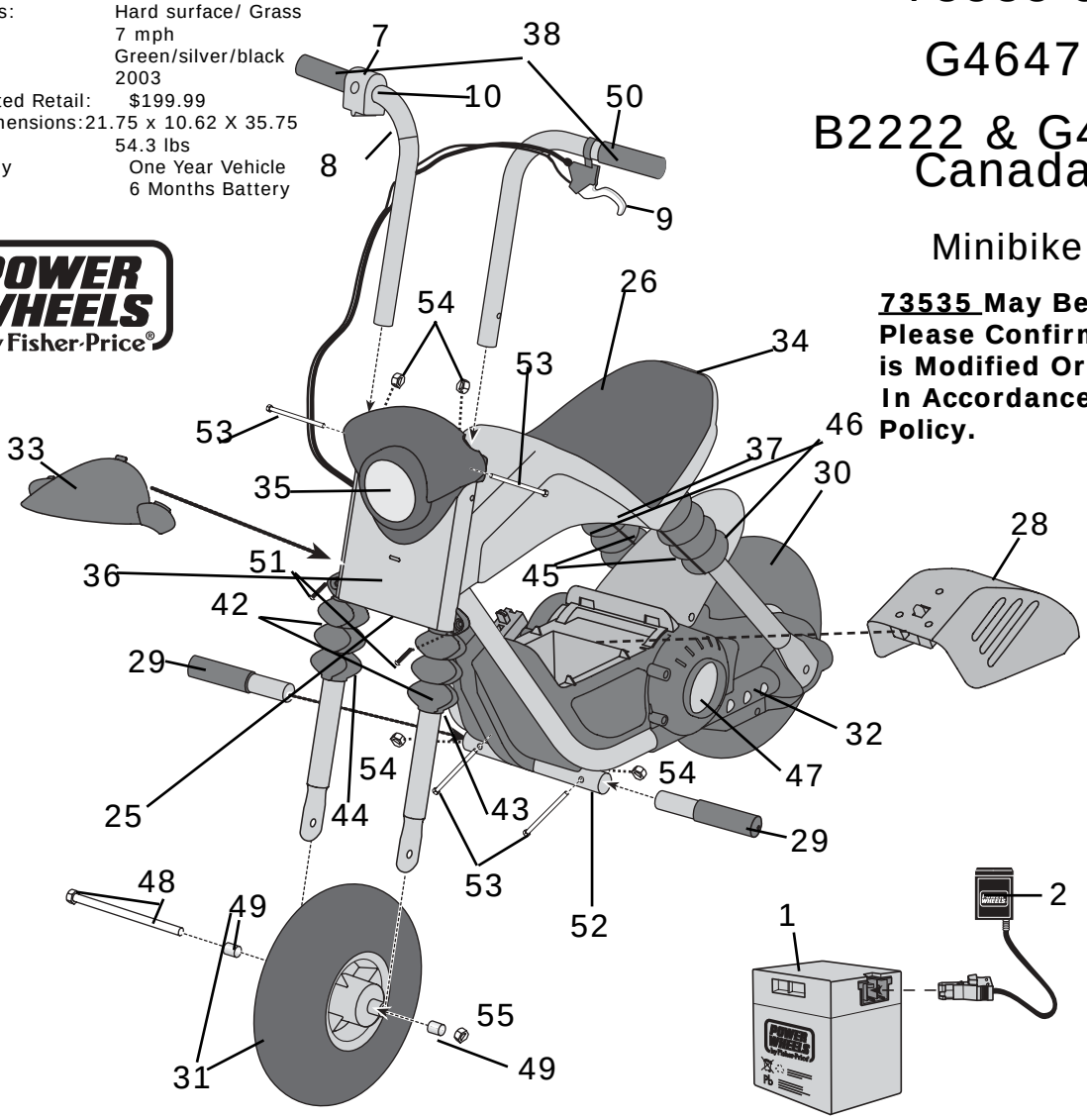

Rev. 8/3/05

Working / Electrical Parts

Item No.	Description	Part No.	Qty.
1.	*Battery 12V 9.5 Amp	00801-0638	1
(Use 12V 12 Amp As Replacement)		00801-1048	1
2.	Charger w/Probe	00801-0972	1
3.	**Motor w/Idler Pulley**	**00968-9006**	**1**
6.	**Battery Harness Assembly**	**73535-9559**	**1**
7.	**Turbo switch**	**73535-9549**	**1**
8.	**Handlebar Throttle Tube N/A**	**73535-4029**	**1**
9.	**Brake**	**73530-9119**	**1**
10.	**Assmbly Turbo Throttle w/hand grips**	**73535-9029**	**1**

Plastic / Other Parts

Item No.	Description	Part No.	Qty.
25.	Body	N/A	
26.	**Seat Assm.**	**73535-9639**	**1**
28.	Battery Cover Assembly	73535-9329	1
29.	Foot Pegs	73535-2619	2
30.	**Rear Wheel Assm.**	**73535-9349**	**1**
31.	Front Wheel Assm (includes spacers (bushings))	73535-9249	1
32.	**Brake Guard**	**73535-2789**	**1**
33.	Front Fender	73535-2429	1
34.	Rear Reflector N/A	73530-2399	1
35.	**Headlight Assembly**	**73535-9419**	**1**
36.	**Front Fork**	**73535-4079**	**1**
37.	**Tank Cover minus seat**	**73535-2629**	**1**
38.	Hand Grips N/A (See 10 & 50)	73530-2239	2
42.	Front Shocks Outer (L & R)	73535-2449	2
43.	Left Front Shock Rear	73535-2439	1
44.	Right Front Shock Rear	73535-2459	1
45.	Back Rear Shock-Inner	73535-2649	2
46.	Back Rear Shock Outer	73535-2659	2
47.	Reflector/Housing N/A	N/A	2

Hardware / Metal Parts

Item No.	Description	Part No.	Qty.
48.	Front Axle w/(1) Nyloc Nut	73535-4499	1
49.	Spacer (Ord front wheel assembly)		2
50.	**Handlebar brake tube w/hand grips**	**73535-9339**	**1**
51.	8 X 1 Screw	0912-8003	2
52.	Footpeg tube-(metal)	73535-4469	2
53.	1/4-20 x 1 1/2 1 9/16 Bolt N/A (order parts bag-73535-9069)	73535-4489	4
54.	1/4-20 7/16 Nyloc Nut N/A (order parts bag-73535-9069)	73530-4449	4
55.	1/2-13 Nyloc Nut (9/16)	73535-4479	1

Parts Not Shown

Description	No.	Qty.
Parts Bag	73535-9069	1
Literature Bag	73535-9019	1
Owners Manual	(Order Lit bag)	1
Decal Sheet	73535-0310	1
Allen Wrench 5 MM	73535-4069	1
Plastic Tie	(Order Lit Bag)	
PC Board	**73535-9539**	**1**
Tire Tube-Rear	**73530-2359**	**1**
Drive Belt	**73530-2289**	**1**
Tire Tube-Front	**73530-2259**	**1**
PIC Switch-push button	**00801-1198**	**1**
Head Tube-Sleeve	**73535-4459**	**1**
Head Tube Bushing	**73535-2609**	**2**
Brake Assembly	**73530-9259**	**1**
Rear Axle	**73535-4099**	**1s**

N/A = Not Available *Produced w/either 12V, 9.5 amp or 12V, 12 amp battery. Use 12V, 12 amp as replacement battery.

Bold and Underlined parts are to be purchased and installed by Service Centers only. These items may not be sold directly to consumers by Service Centers or Fisher-Price.