This Owner's Manual is provided and hosted by Appliance Factory Parts.

Appliance Factory Parts
Experts in BBQ, Humidifier, & Appliance Parts
1-800-955-7075

FISHER PRICE DPP94 Owner's Manual

Shop genuine replacement parts for FISHER PRICE DPP94

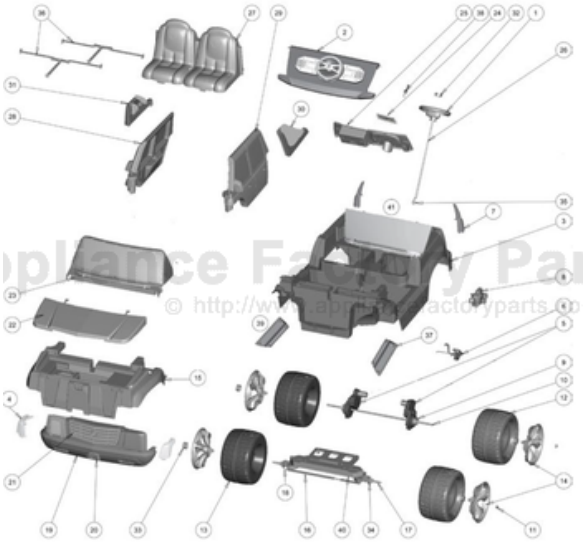

Find Your FISHER PRICE Ride On Parts - Select From 999 Models

-------- Manual continues below --------

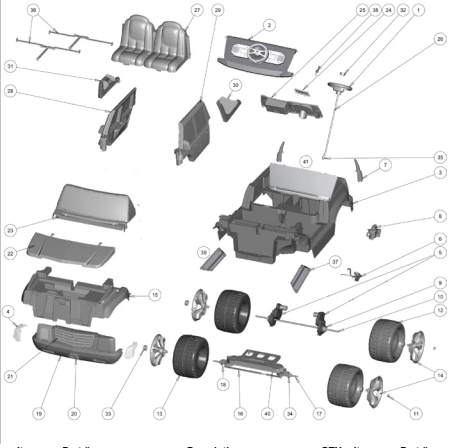

DPP94
Barbie Cadillac Escalade
Power Wheels Advanced Series

Age Range:	3 and up
Weight Limit:	130 Lbs.
Surfaces:	Grass/Asphalt/Hard Surfaces
Speed:	2.5 For/Rev 5.0 For
Colors:	Pink Body/Black Wheels
Intro:	2015
Suggested Retail:	$434.00
Box Dimensions:	34.88" x 35" x 51"
Warranty:	One Year Vehicle Six Months Battery

Item	Part #	Description	QTY	Item	Part #	Description	QTY
1	3900-3832	Steering Wheel (CDD13)	1	29	3900-3826	Left Door for Barbie Escalade (CDD13)	1
2	3900-3869	Speaker	1	30	3900-4010	Rear Window Bag (left & right) CDD13	1
3	N/A	Body		31	*See 30	*See 30	1
4	3900-3198	Headlight Cover Bag (left & right)(CDD13)	2	32	X3419-2559	Steering Wheel Button for Barbie Escalad	1
5	**00968-2940**	**# 7R Motor Gearbox Assembly (16T)**	**2**	33	G3740-2429	Center Hubcap (silver)	4
6	X3419-9399	Footboard Assembly for Escalade	1	34	B9785-2229	.437 Bushing	2
7	N/A	Taillights	2	35	00801-1620	Steering Column Cap (Fastener .354) Blk.	1
8	H0440-9159	Shifter for Escalade (silver)	1	36	00801-2084	Seatbelt (black)	1
9	74460-2249	Wheel Driver 10 RIB	2	37	3900-3902	Rocker Panel (left) for Escalade (CDD13)	1
10	3900-3814	Rear Axle for Escalade	1	38	H0440-9049	Key Housing Assembly w/ Key (silver)	1
11	00801-1939	Cap Nut .437 - Black	2	39	3900-3903	Rocker Panel (right) for Escalade (CDD13)	1
12	G3740-2409	Left wheel - black	2	40	3900-3899	Bumper Support (CDD13)	1
13	G3740-2419	Right wheel - black	2	41	3900-3870	Trunk Window	1
14	G3740-2429	Hubcap (silver)	4				
15	W6203-9309	Front Module for Escalade	1			**Parts Not Shown**	
16	H0440-4419	Crossbar - lower (5 holes)	1		**Part #**	**Description**	**QTY**
17	H0440-4539	Front Axle (new style) for Escalade	2		00801-1567	Wrench 9/16" (Assembly Tool)	1
18	H0440-9429	Steering Linkage for Escalade	1		00905-0116	3/8" -16 Lock Nut	1
19	3900-3822	Front Bumper w/Grille (CDD13)	1		**00801-1756**	**Switch Control - (shifter)(rocker)**	**1**
20	00801-1518	Large Power Wheel Emblem	1		3900-3825	Label Sheet for Barbie Escalade (CDD13)	1
21	3900-3806	Grille for Barbie Escalade (CDD12)	1		W6203-2259	Channel Cover for Escalade	1
22	3900-3824	Hood for Barbie Escalade (CDD13)	1		00801-1869	12 Volt Battery	1
23	3900-3833	Windshield/Dash/Radio for Barbie Escalad	1		00801-1778	12 Volt Charger w/Probe	1
24	3900-3968	Radio Cover for Escalade (CDD13)	1		3900-3829	Parts Bag for Barbie Escalade (CDD13)	1
25	**3900-3830**	**Radio Assy (CDD13)**	**1**		**00968-2720**	**# 7R Motor Pinion (17T)**	**2**
26	3900-3813	Steering Column for Escalade (CDD12)	1		**N8417-9799**	**Harness for Escalade**	**1**
27	3900-3821	Seat for Escalade (CDD13)	1		3900-3900	Door Windows (left & right)	1
28	3900-3827	Right Door for Barbie Escalade (CDD13)	1				

Bold and underlined parts are to be purchased and installed by Service Centers only. These items may not be sold directly to consumers by Service Centers or Fisher-Price.