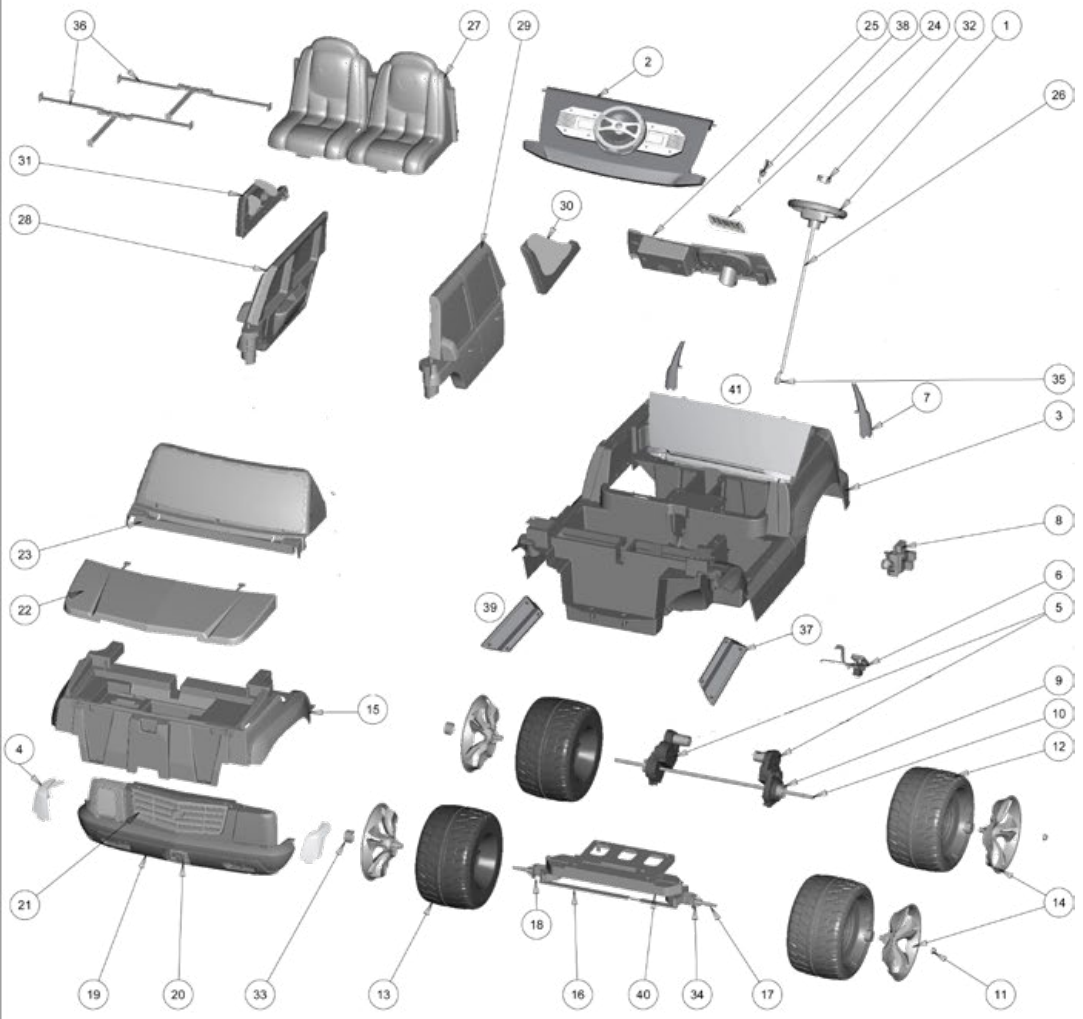

DPP94
Barbie Cadillac Escalade
Power Wheels Advanced Series

Age Range:	3 and up
Weight Limit:	130 Lbs.
Surfaces:	Grass/Asphalt/Hard Surfaces
Speed:	2.5 For/Rev 5.0 For
Colors:	Pink Body/Black Wheels
Intro:	2015
Suggested Retail:	$434.00
Box Dimensions:	34.88" x 35" x 51"
Warranty:	One Year Vehicle Six Months Battery

POWER WHEELS by Fisher-Price®

Item	Part #	Description	QTY
1	3900-3832	Steering Wheel (CDD13)	1
2	3900-3869	Speaker	1
3	N/A	Body	
4	3900-3198	Headlight Cover Bag (left & right)(CDD13)	2
5	**00968-2940**	**# 7R Motor Gearbox Assembly (16T)**	**2**
6	X3419-9399	Footboard Assembly for Escalade	1
7	N/A	Taillights	2
8	H0440-9159	Shifter for Escalade (silver)	1
9	74460-2249	Wheel Driver 10 RIB	2
10	3900-3814	Rear Axle for Escalade	1
11	00801-1939	Cap Nut .437 - Black	2
12	G3740-2409	Left wheel - black	2
13	G3740-2419	Right wheel - black	2
14	G3740-2429	Hubcap (silver)	4
15	W6203-9309	Front Module for Escalade	1
16	H0440-4419	Crossbar - lower (5 holes)	1
17	H0440-4539	Front Axle (new style) for Escalade	2
18	H0440-9429	Steering Linkage for Escalade	1
19	3900-3822	Front Bumper w/Grille (CDD13)	1
20	00801-1518	Large Power Wheel Emblem	1
21	3900-3806	Grille for Barbie Escalade (CDD12)	1
22	3900-3824	Hood for Barbie Escalade (CDD13)	1
23	3900-3833	Windshield/Dash/Radio for Barbie Escalad	1
24	3900-3968	Radio Cover for Escalade (CDD13)	1
25	**3900-3830**	**Radio Assy (CDD13)**	**1**
26	3900-3813	Steering Column for Escalade (CDD12)	1
27	3900-3821	Seat for Escalade (CDD13)	1
28	3900-3827	Right Door for Barbie Escalade (CDD13)	1

Item	Part #	Description	QTY
29	3900-3826	Left Door for Barbie Escalade (CDD13)	1
30	3900-4010	Rear Window Bag (left & right) CDD13	1
31	*See 30	*See 30	1
32	X3419-2559	Steering Wheel Button for Barbie Escalad	1
33	G3740-2429	Center Hubcap (silver)	4
34	B9785-2229	.437 Bushing	2
35	00801-1620	Steering Column Cap (Fastener .354) Blk.	1
36	00801-2084	Seatbelt (black)	1
37	3900-3902	Rocker Panel (left) for Escalade (CDD13)	1
38	H0440-9049	Key Housing Assembly w/ Key (silver)	1
39	3900-3903	Rocker Panel (right) for Escalade (CDD13)	1
40	3900-3899	Bumper Support (CDD13)	1
41	3900-3870	Trunk Window	1

Parts Not Shown

Part #	Description	QTY
00801-1567	Wrench 9/16" (Assembly Tool)	1
00905-0116	3/8" -16 Lock Nut	1
00801-1756	**Switch Control - (shifter)(rocker)**	**1**
3900-3825	Label Sheet for Barbie Escalade (CDD13)	1
W6203-2259	Channel Cover for Escalade	1
00801-1869	12 Volt Battery	1
00801-1778	12 Volt Charger w/Probe	1
3900-3829	Parts Bag for Barbie Escalade (CDD13)	1
00968-2720	**# 7R Motor Pinion (17T)**	**2**
N8417-9799	**Harness for Escalade**	**1**
3900-3900	Door Windows (left & right)	1

Bold and underlined parts are to be purchased and installed by Service Centers only. These items may not be sold directly to consumers by Service Centers or Fisher-Price.