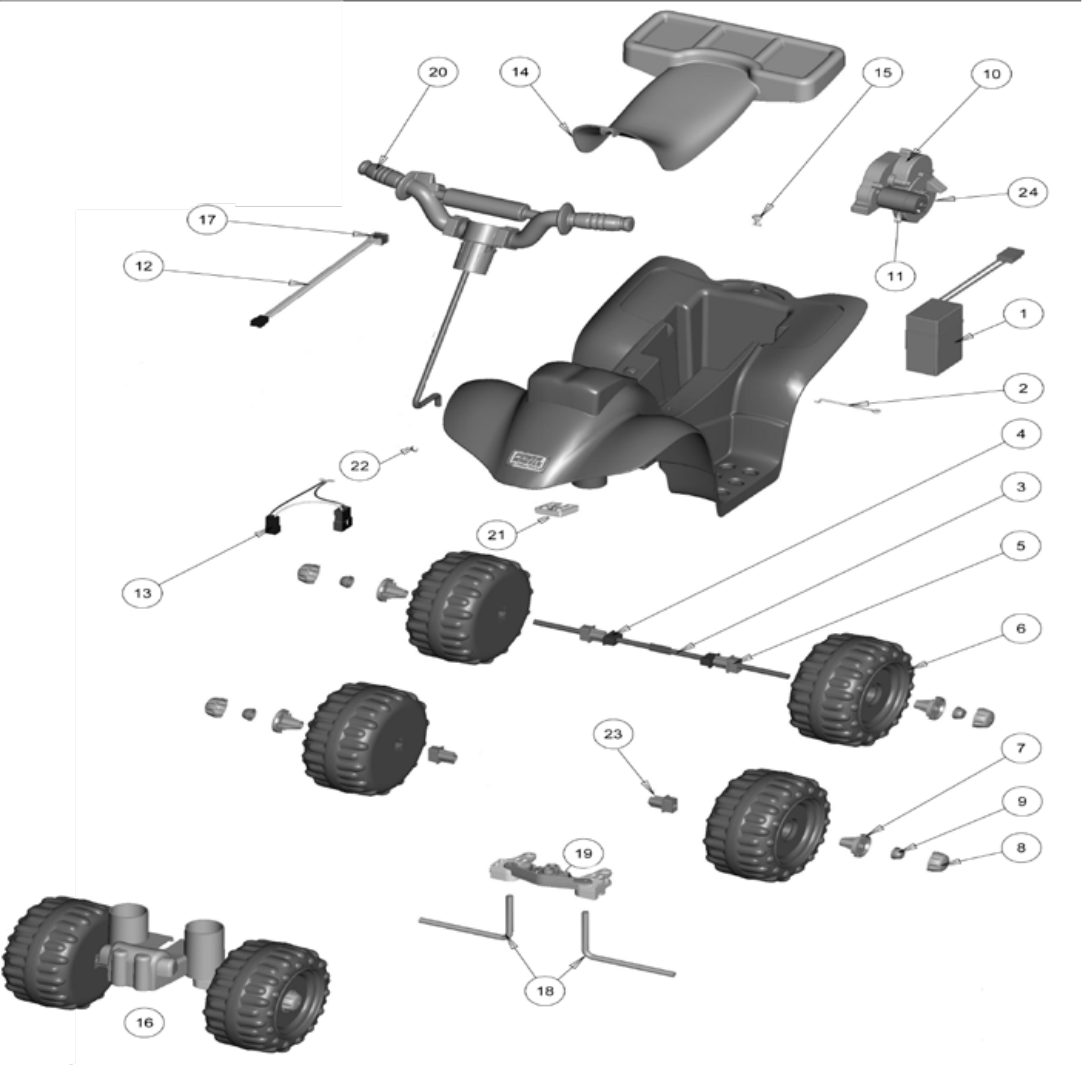

CMP32 Paw Patrol Lil Quad PW Toddler Series	
Age Range:	12-36 Months
Weight Limit:	40 Lbs
Surfaces:	Hard Surfaces
Speed:	2 MPH Forward
Colors:	Blue and Red Body/Black Wheels
Intro:	2014
Suggested Retail:	$84.90
Box Dimensions:	16.375" x 13" x 26.25" 17 Lbs
Warranty:	One Year Vehicle Six Months Battery

POWER WHEELS by Fisher-Price®

Item	Part #	Description	QTY
1	00801-1457	4 Amp Battery (blue)	1
2	74230-4129	Battery Retainer	1
3	77760-4529	Rear Axle for Lil Quad	1
4	76920-2549	Rectangular Bushing (no ext.)	2
5	76920-2659	Wheel Bushing w/ Extension	2
6	77760-2119	Wheel (black) for Lil Quad	4
7	3900-3424	Bushing Retainer for Lil Quad	4
8	3900-3413	Center Hubcap for Paw Patrol	4
9	0801-0604	Cap Nut .354 (Black)	4
10	**00968-3900**	**#10 Motor Gearbox Assm.**	**1**
11	**00968-3700**	**# 10 Motor Pinion Assm.**	**1**
12	**3800-7785**	**Handlebar Harness w/switch**	**1**
13	**77760-9699**	**Main Wiring Harness for Lil Quad**	**1**
14	3900-3016	Seat for Lil Quad	1
15	78570-2439	J Lock Fastener	1
16	CMP32-9139	Front Wheel Assembly for Lil Quad	1
17	**00801-0697**	**Switch Signalux - 2 prong**	**1**
18	77760-4519	Front Axle for Lil Quad	2
19	K0451-9329	Steering Linkage	1
20	CMP32-9209	Handlebar w/Harness/Switch/Steering Col	1

Item	Part #	Description	QTY
21	00801-2097	Steering Column Clip for Lil Quad	1
22	J8473-2359	Steering Column Cap	1
23	M1350-2179	Wheel Bushing (black)	2
24	**00968-3800**	**#10 Gearbox Assm.**	**1**

Parts Not Shown

Part #	Description	QTY
3900-3412	Manual for Lil Quad	1
0801-0228	Screw Truss HD 8x7/8	1
00801-0253	Washer. 5/16	2
3900-3407	Label Sheet for Paw Patrol	1

Bold and underlined parts are to be purchased and installed by Service Centers only. These items may not be sold directly to consumers by Service Centers or Fisher-Price.