This Owner's Manual is provided and hosted by Appliance Factory Parts.

Appliance Factory Parts
Experts in BBQ, Humidifier, & Appliance Parts
1-800-955-7075

FISHER PRICE CLG79 Owner's Manual

Shop genuine replacement parts for FISHER PRICE CLG79

Find Your FISHER PRICE Ride On Parts - Select From 999 Models

-------- Manual continues below --------

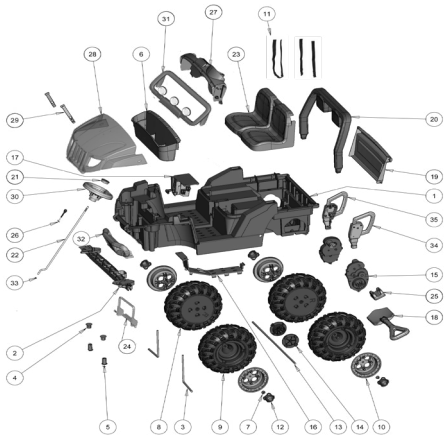

CLG79 Arctic Cat PW Advanced Series	
Age Range:	3 and up
Weight Limit:	130 lbs.
Surfaces:	Hard and grass surfaces
Speed:	2.5 / 5 mph Forward 2.5 mph Reverse
Colors:	Green, Black, Orange
Intro:	2015
Suggested Retail:	$325.50
Box Dimensions:	23.374"x32.374x50.433
Warranty:	One Year Vehicle Six Months Battery

Item	Part #	Description	QTY
1	N/A	Body	
2	L2170-9199	Steering Linkage	1
3	L2170-4509	Front Axle	2
4	L2170-2689	Bushing - Upper	2
5	L2170-2699	Bushing - Lower	2
6	L2170-2269	Storage Tray for Arctic Cat	1
7	00801-1939	Cap Nut .437 - Black	6
8	J8472-2269	Right Wheel	2
9	J8472-2339	Left Wheel	2
10	L7825-2459	Hubcap	4
11	00801-2084	Seatbelt (black)	2
12	L7825-2469	Hubcap Center	4
13	L2170-4519	Rear Axle	1
14	L2170-2249	Wheel Driver	2
15	**00968-2922**	**# 7R Motor Gearbox Assembly**	**2**
16	L2170-9399	Footboard for Arctic Cat	1
17	74310-9239	Shifter Assm. - silver	1
18	B0155-2449	Shovel for Arctic Cat	1
19	P8814-2319	Tailgate for Arctic Cat	1
20	L2170-2329	Rear Roll Bar for Arctic Cat	1
21	W9418-2729	Steering Wheel Button	1
22	L2170-4239	Steering Column for Arctic Cat Prowler	1
23	L2170-2409	Seat for Arctic Cat	1
24	3800-7809	Battery Retainer	1
25	W8675-6559	Shovel Bracket	1
26	H0440-9049	Key Housing Assembly	1

Item	Part #	Description	QTY
27	3800-8492	Dashboard w/label for Arctic Cat Prowler	1
28	3800-8472	Hood for Arctic Cat	1
29	L2170-2289	Hood Strap	2
30	3900-3665	Steering Wheel (CLG79) (orange)	1
31	3900-3669	Windshield for Arctic Cat (CLG79)	1
32	3900-3013	Brush Guard w/Logo	1
33	00905-0116	3/8" - 16 Lock Nut	1
34	W8675-2609	Left Handle (black)	1
35	W8675-2619	Right Handle (black)	1

Parts Not Shown

Part #	Description	QTY
00801-1778	12 Volt Charger w/Probe	1
00801-1869	12 Volt Battery (1)	1
00968-2720	**# 7R Motor Pinion**	**2**
00968-2823	**# 7R Gearbox**	**2**
X0073-9799	**Wiring Harness for Arctic Cat**	**1**
00801-1775	**Switch Control - (shifter)(rocker type)**	**2**
00801-2039	**Footswitch - (plunger type)**	**1**
3900-3598	Manual for Arctic Cat	1
0912-8001	(1) #8 x 3/4 inch screw.	20
3900-1334	Hardware Bag	1
3900-3621	Parts Bag for Arctic Cat	1
3900-3597	Label Sheet	1

Bold and underlined parts are to be purchased and installed by Service Centers only. These items may not be sold directly to consumers by Service Centers or Fisher-Price.