This Owner's Manual is provided and hosted by Appliance Factory Parts.

Appliance Factory Parts
Experts in BBQ, Humidifier, & Appliance Parts
1-800-955-7075

FISHER PRICE CDY12 Owner's Manual

Shop genuine replacement parts for FISHER PRICE CDY12

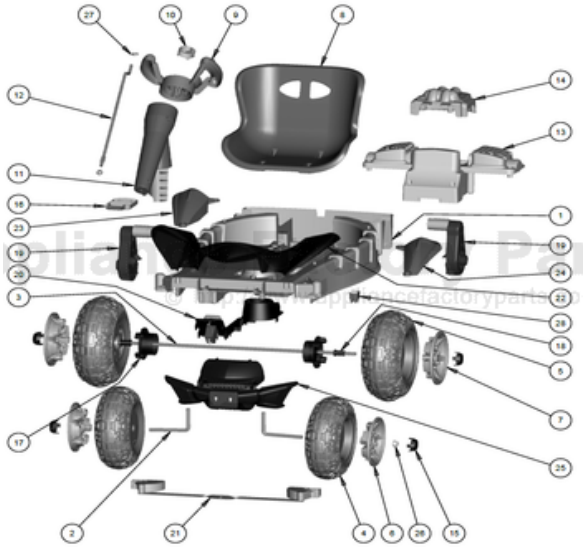

Find Your FISHER PRICE Ride On Parts - Select From 999 Models

-------- Manual continues below --------

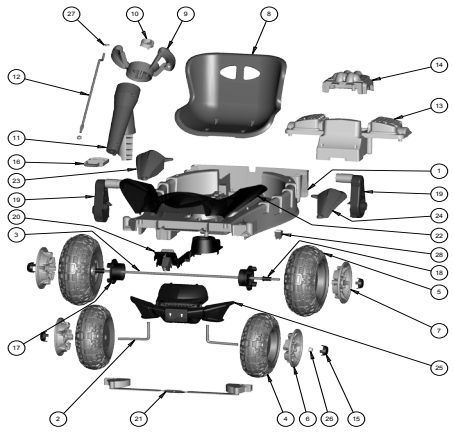

CDY12
TMNT Lil Dune Racer
PW Preschool

Age Range:	2 and up
Weight Limit:	65 Lbs.
Surfaces:	Grass and Hard Surfaces
Speed:	3.5 MPH Forward/Reverse
Colors:	Green and Purple Body
Intro:	2014
Suggested Retail:	$180.60
Box Dimensions:	26.875"x12.375"x40.75"
Warranty:	One Year Vehicle
	Six Months Battery

Item	Part #	Description	QTY	Item	Part #	Description	QTY
1	N/A	Body		22	CDY12-2419	Front Fender Set (left & right)	1
2	Y5014-4519	Front Axle for Lil Dune Racer	2	23	3900-3089	Rear Fender Set (Right & Left)CDY12	1
3	Y5014-4509	Rear Axle for Lil Dune Racer	1	24	See *23	Rear Fender Set (Right & Left)CDY12	
4	Y5014-2709	Front Wheel for Lil Dune Racer	2	25	Y5014-2459	Brush Guard for Lil Dune Racer	1
5	Y5014-2719	Rear Wheel for Lil Dune Racer	2	26	00801-1939	Cap Nut .437	6
6	Y5014-6729	Front Rim for Lil Dune Racer	2	27	00905-0116	3/8" -16 Lock Nut	1
7	Y5014-6739	Rear Rim for Lil Dune Racer	2	28	00801-1773	Control Switch F/R - w/white buttons	1
8	CDY12-2039	Seat for Lil Dune Racer	1				
9	CDY12-2359	Steering Wheel (yellow)	1				
10	CDY12-2369	Steering Wheel Cap (yellow)	1				
11	Y5014-2379	Steering Post for Lil Dune Racer	1				
12	Y5014-4459E	Steering Column for Lil Dune Racer	1				
13	Y5014-2409	False Engine Cover for Lil Dune Racer	1				
14	CDY12-2499	Battery Cover for Lil Dune Racer	1				
15	CDY12-2749	Hubcap Center for Lil Dune Racer	4				
16	CDY12-2639	Bumper Connector for Lil Dune	1				
17	L2170-2249	Driver	2				
18	73610-2689	Bushing .437 Long Black	2				
19	**74180-9519**	**#3B Motor Gearbox Assembly**	**2**				
20	3900-2183	Footboard Assembly	1				
21	3900-2184	Steering Linkage	1				

Parts Not Shown

Part #	Description	QTY
00801-0712	S6V Battery w/ Internal Fuse.	1
00801-1779	S6V Charger Fused	1
CDY12-9249	Parts Bag for Lil Dune Racer	1
Y5014-9269	Hardware Bag for Lil Dune Racer	1
CDY12-0310	Label Sheet for Lil Dune Racer	1
CDY12-0720	Manual for Lil Dune Racer	1
74550-9279	**Gearbox 3B w/ Insert**	**2**
74580-9539	**3B Motor w/Pinion**	**2**
00801-2039	**Footswitch - (plunger type)**	**1**
Y5014-9799	**Harness for Lil Dune Racer**	**1**

Bold and underlined parts are to be purchased and installed by Service Centers only. These items may not be sold directly to consumers by Service Centers or Fisher-Price.

8/2/2016 10:39