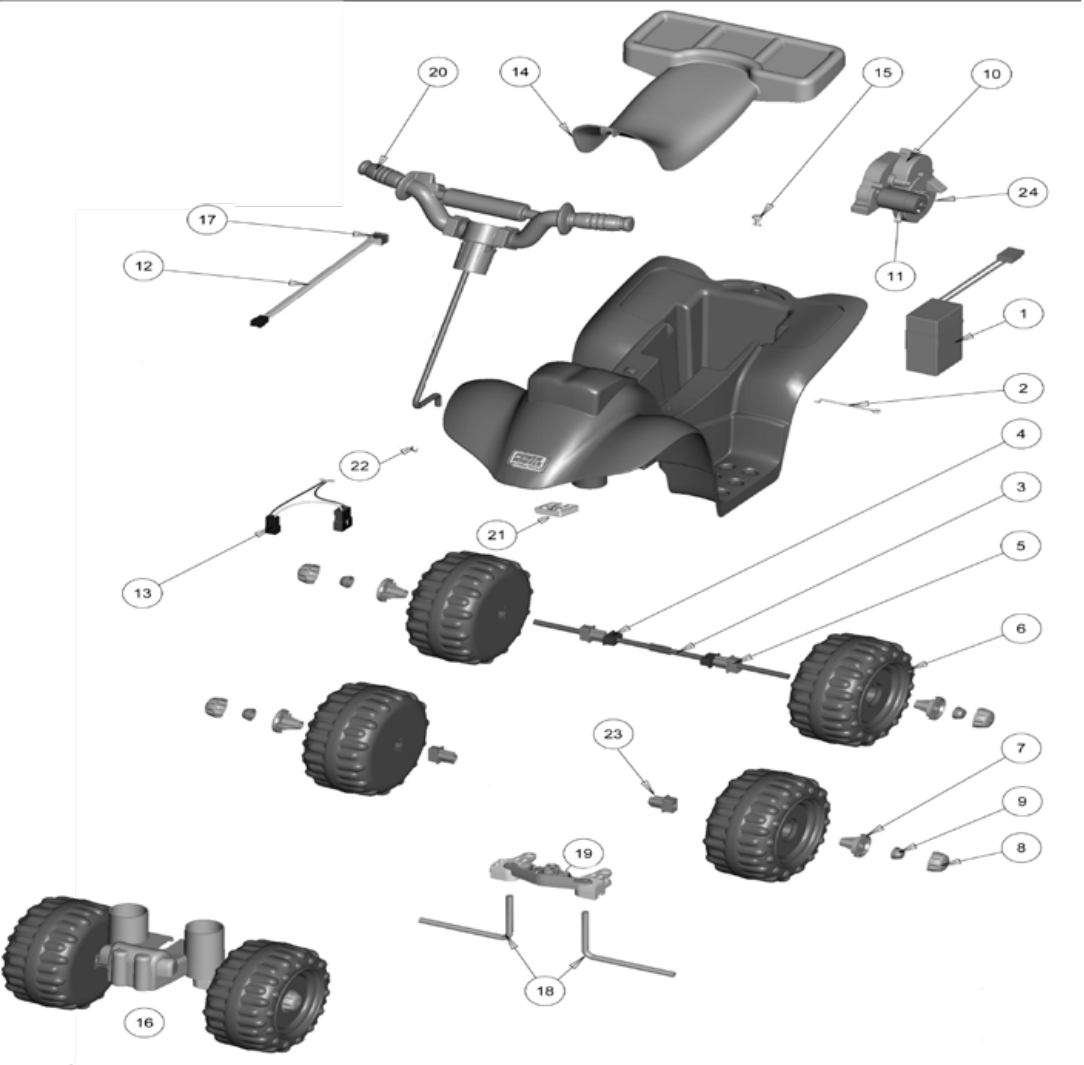


**CDD26**
**Kawasaki Lil Quad w/ Track**
**PW Toddler Series**

| | |
|---|---|
| Age Range: | 12-36 Months |
| Weight Limit: | 40 Lbs |
| Surfaces: | Hard Surfaces |
| Speed: | 2 MPH Forward |
| Colors: | Red Body/Black Wheels |
| Intro: | 2014 |
| Suggested Retail: | $119.00 |
| Box Dimensions: | 16.375" x 13" x 26.25"<br>17 Lbs |
| Warranty: | One Year Vehicle<br>Six Months Battery |

POWER WHEELS by Fisher-Price®

| Item | Part # | Description | QTY |
|---|---|---|---|
| 1 | 00801-1457 | 4 Amp Battery (blue) | 1 |
| 2 | 74230-4129 | Battery Retainer | 1 |
| 3 | 77760-4529 | Rear Axle for Lil Quad | 1 |
| 4 | 76920-2549 | Rectangular Bushing (no ext.) | 2 |
| 5 | 76920-2659 | Wheel Bushing w/ Extension | 2 |
| 6 | 3900-4103 | Rear Wheel for Lil Quad | 2 |
| 7 | 3900-3424 | Bushing Retainer (CDD26) (red) | 4 |
| 8 | 3900-3415 | Center Hubcap for Lil Quad | 4 |
| 9 | 0801-0604 | Cap Nut .354 (Black) | 4 |
| **10** | **00968-3900** | **#10 Motor Gearbox Assm.** | **1** |
| **11** | **00968-3700** | **# 10 Motor Pinion Assm.** | **1** |
| **12** | **3800-7785** | **Handlebar Harness w/switch** | **1** |
| **13** | **77760-9699** | **Main Wiring Harness for Lil Quad** | **1** |
| 14 | CDD26-6149 | Seat w/Lock for Lil Quad | 1 |
| 15 | 78570-2439 | J Lock Fastener | 1 |
| 16 | CDD26-9139 | Front Wheel Assembly for Lil Quad | 1 |
| **17** | **00801-0697** | **Switch Signalux - 2 prong** | **1** |
| 18 | 77760-4519 | Front Axle for Lil Quad | 2 |
| 19 | K0451-9329 | Steering Linkage | 1 |
| 20 | CDD26-9209 | Handlebar w/harness/switch/steering col | 1 |
| 21 | 00801-2097 | Steering Column Clip for Lil Quad | 1 |
| 22 | J8473-2359 | Steering Column Cap | 1 |
| 23 | M1350-2179 | Wheel Bushing (black) | 2 |
| **24** | **00968-3800** | **#10 Gearbox Assm.** | **1** |

**Parts Not Shown**

| Part # | Description | QTY |
|---|---|---|
| 3900-3412 | Manual for Lil Quad | 1 |
| 0801-0228 | Screw Truss HD 8x7/8 | 1 |
| 00801-0253 | Washer. 5/16 | 2 |
| 3900-3409 | Label Sheet for Lil Quad | 1 |
| 3900-3742 | Straight Rail w/Hoops (CLM86/CDD26) | 4 |
| 3900-3743 | Rail Lg Curve for Lil Quad (CLM86/CDD26) | 8 |
| 3900-3744 | Rail Sm Curve for Lil Quad (CLM86/CDD26) | 8 |
| 3900-3745 | Rocky Railroad Tie (CLM86/CDD26) | 10 |
| 00801-1781 | Charger 4 Amp 6 Volt | 1 |

**Bold and underlined parts are to be purchased and installed by Service Centers only. These items may not be sold directly to consumers by Service Centers or Fisher-Price.**