This Owner's Manual is provided and hosted by Appliance Factory Parts.

Appliance Factory Parts
Experts in BBQ, Humidifier, & Appliance Parts
1-800-955-7075

FISHER PRICE CDD12 Owner's Manual

Shop genuine replacement parts for FISHER PRICE CDD12

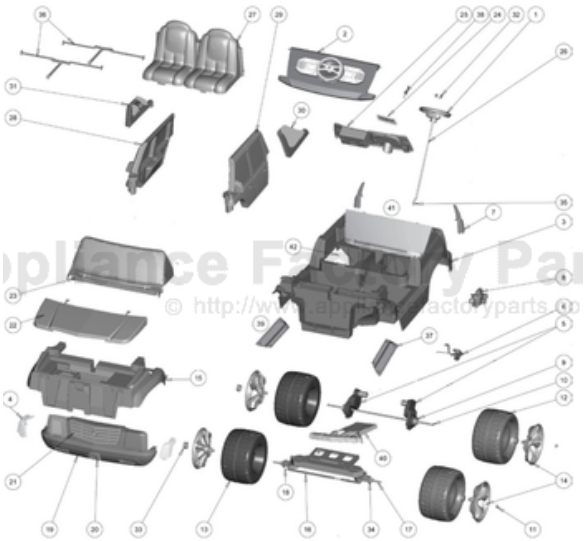

Find Your FISHER PRICE Ride On Parts - Select From 999 Models

-------- Manual continues below --------

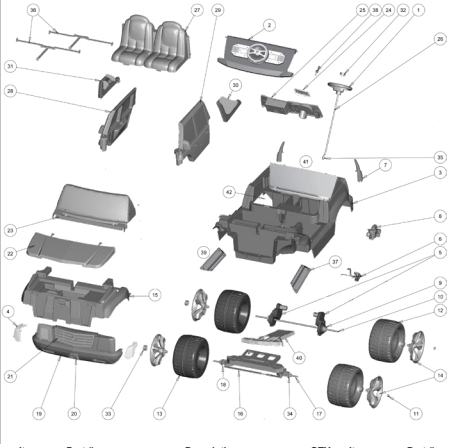

CDD12
New Escalade
Power Wheels Advanced Series

Age Range:	3 and up
Weight Limit:	130 Lbs.
Surfaces:	Grass/Asphalt/Hard Surfaces
Speed:	2.5 For/Rev 5.0 For
Colors:	Black Body/Black Wheels
Intro:	2015
Suggested Retail:	$434.00
Box Dimensions:	34.88" x 35" x 51"
Warranty:	One Year Vehicle Six Months Battery

Item	Part #	Description	QTY
1	3900-3816	Steering Wheel for Escalade	1
2	3900-3869	Speaker	1
3	N/A	Body	
4	3900-3198	Headlight Cover Bag (left & right)(CDD13)	1
5	**00968-2940**	**# 7R Motor Gearbox Assembly (16T)**	**2**
6	H0440-9399	Footboard Assembly(black)	1
7	3900-3544	Tailight Set for Escalade (CDD12/CDD13)	1
8	H0440-9159	Shifter for Escalade (silver)	1
9	74460-2249	Wheel Driver 10 RIB	2
10	3900-3814	Rear Axle for Escalade	1
11	00905-0116	3/8" – 16 Lock Nut	2
12	G3740-2409	Left wheel - black	2
13	G3740-2419	Right wheel - black	2
14	3900-3817	Wheel Cover (CDD12/CDD13) Chrome	4
15	W6203-9309	Front Module for Escalade	1
16	H0440-4419	Crossbar - lower (5 holes)	1
17	H0440-4539	Front Axle (new style) for Escalade	2
18	H0440-9429	Steering Linkage for Escalade	1
19	3900-3805	Front Bumper w/Grill for (CDD12)	1
20	00801-1518	Large Power Wheel Emblem	1
21	3900-3806	Grille for Escalade (CDD12) (Chrome)	1
22	3900-3808	Hood for Escalade (CDD12)	1
23	3900-3818	Windshield/Dash/Radio for Escalade	1
24	3900-3967	Radio Cover for Escalade (CDD12)	1
25	**3900-3811**	**Radio for Escalde (CDD12)**	**1**
26	3900-3813	Steering Column for Escalade (CDD12)	1
27	L7824-2659	Seat for Escalade	1
28	3900-3804	Right Door for Escalade (CDD12)	1
29	3900-3803	Left Door for Escalade (CDD12)	1

Item	Part #	Description
30	3900-4010	Rear Window Set
31	*See 30	
32	3900-3815	Steering Wheel Button (CDD12)
33	G3740-2429	Center Hubcap (silver)
34	00801-1939	.437 Bushing
35	00801-1620	Steering Column Cap (Fastener .354)
36	00801-2084	Seatbelt (black)
37	N/A	Rocker Panel (left) for Escalade
38	H0440-9049	Key Housing Assembly for Escalade
39	N/A	Rocker Panel (right) for Escalade
40	3900-3979	Bumper Support for Escalade (CDD12)
41	3900-3870	Trunk Window
42	3900-3901	Trunk for Barbie Escalade (CDD12/CDD13)

Parts Not Shown

Part #	Description
00801-1567	Wrench 9/16" (Assembly Tool)
00905-0116	3/8" -16 Lock Nut
00801-1756	**Switch Control - (shifter)(rocker)**
3900-3812	Label Sheet for Escalade (CDD12)
W6203-2259	Channel Cover for Escalade
00801-1869	12 Volt Battery
00801-1778	12 Volt Charger w/Probe
3900-3810	Parts Bag for Escalade (CDD12)
00968-2720	**# 7R Motor Pinion (17T)**
N8417-9799	**Harness for Escalade**
3900-3809	Manual for Escalade (CDD12)
00801-2039	**Footswitch (plunger type)**
3900-4012	Hardware Bag
3900-3900	Door Windows (left & right)

Bold and underlined parts are to be purchased and installed by Service Centers only. These items may not be sold directly to consumers Service Centers or Fisher-Price.