This Owner's Manual is provided and hosted by Appliance Factory Parts.

Appliance Factory Parts
Experts in BBQ, Humidifier, & Appliance Parts
1-800-955-7075

FISHER PRICE CCG93 Owner's Manual

Shop genuine replacement parts for FISHER PRICE CCG93

Find Your FISHER PRICE Ride On Parts - Select From 999 Models

-------- Manual continues below --------

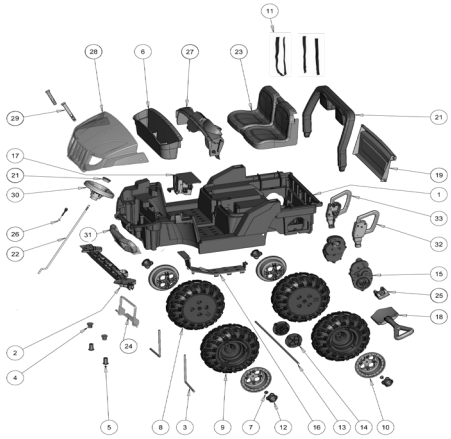

CCG93
Artic Cat Pink
PW Advanced Series

Age Range:	3 and up
Weight Limit:	130 lbs.
Surfaces:	Hard and grass surfaces
Speed:	2.5 / 5 mph Forward
	2.5 mph Reverse
Colors:	Pink Body/Black Wheels
Intro:	2014
Suggested Retail:	$340.26
Box Dimensions:	23.374"x32.374x50.433
Warranty:	One Year Vehicle
	Six Months Battery

Item	Part #	Description	QTY	Item	Part #	Description	QTY
1	N/A	Body		25	W8675-6559	Shovel Bracket	1
2	W8675-9199	Steering Linkage	1	26	H0440-9049	Key Housing Assembly	1
3	L2170-4509	Front Axle	2	27	CCG93-2349	Dash for Artctic Cat (Purple)	1
4	L2170-2689	Bushing - Upper	2	28	3900-2435	Hood w/Lights & Straps	1
5	L2170-2699	Bushing - Lower	2	29	L2170-2289	Hood Strap	2
6	CCG93-2269	Storage Tray for Arctic Cat	1	30	3900-2945	Steering Wheel w/Button for Arctic Cat	1
7	00801-1939	Cap Nut .437 - Black	6	31	CCG93-2459	Brushguard for Arctic Cat (purple)	1
8	J8472-2339	Left Wheel	2	32	W8675-2609	Left Handle (black)	1
9	J8472-2269	Right Wheel	2	33	W8675-2619	Right Handle (black)	1
10	J8472-2459	Hubcap for KFX	4				
11	00801-2084	Seatbelt (black)	2			**Parts Not Shown**	
12	CCG93-2469	Hubcap Center for Arctic Cat	4		**Part #**	**Description**	**QTY**
13	L2170-4519	Rear Axle	1		00801-1778	12 Volt Charger w/Probe	1
14	L2170-2249	Wheel Driver	2		00801-1869	12 Volt Battery (1)	1
15	**00968-2928**	**# 7R Motor Gearbox Assembly**	**2**		**00968-2720**	**# 7R Motor Pinion**	**2**
16	L2170-9399	Footboard for Arctic Cat	1		**00968-2823**	**# 7R Gearbox**	**2**
17	74310-9239	Shifter Assm. - silver	1		**X0073-9799**	**Wiring Harness for Arctic Cat**	**1**
18	CCG93-2449	Shovel for Arctic Cat	1		**00801-1775**	**Switch Control - (shifter)(rocker type)**	**2**
19	CCG93-2319	Tailgate for Arctic Cat	1		**00801-2039**	**Footswitch - (plunger type)**	**1**
20	CCG93-2329	Sportbar for Arctic Cat	1		CCG93-0720	Manual for Arctic Cat	1
21	CCG93-2749	Steering Wheel Button	1		0912-8001	(1) #8 x 3/4 inch screw.	20
22	L2170-4239	Steering Column for Arctic Cat Prowler	1		3900-1334	Hardware Bag	1
23	CCG93-2409	Seat for Arctic Cat	1		CCG93-9249	Parts Bag for Arctic Cat	1
24	3800-7809	Battery Retainer	1		CCG93-0310A	Label Sheet for Arctic Cat	1

Bold and underlined parts are to be purchased and installed by Service Centers only. These items may not be sold directly to consumers by Service Centers or Fisher-Price.