This Owner's Manual is provided and hosted by Appliance Factory Parts.

Appliance Factory Parts
Experts in BBQ, Humidifier, & Appliance Parts
1-800-955-7075

FISHER PRICE B0155-9993 Owner's Manual

Shop genuine replacement parts for FISHER PRICE B0155-9993

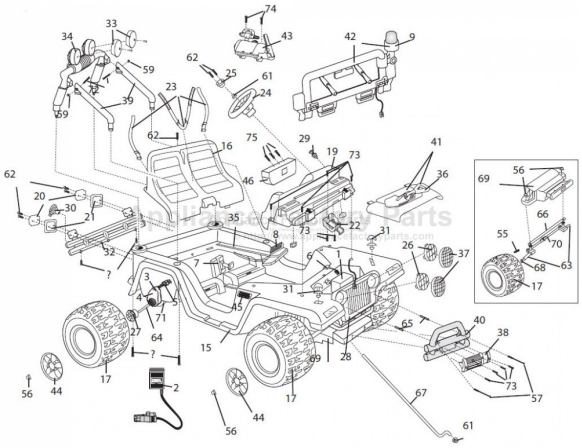

Find Your FISHER PRICE Ride On Parts - Select From 999 Models

-------- Manual continues below --------

B0155-9993
Fire Rescue Jeep
Advanced Series 12 Volt

POWER WHEELS by Fisher-Price

Age Range:	3-7 years
Weight Limit:	130 lbs
Surfaces:	Hard and grass
Speed:	2.5 and 5.0 Forward 2.5 Reverse
Colors:	Red with Black Tires
Intro:	2002
Suggested Retail:	$239.99
Box Dimensions:	33.4 x 18.4 x 44.8
Warranty	One Year Vehicle 6 Months Battery

Please see Service Bulletin 183 for 2007 parts changes.

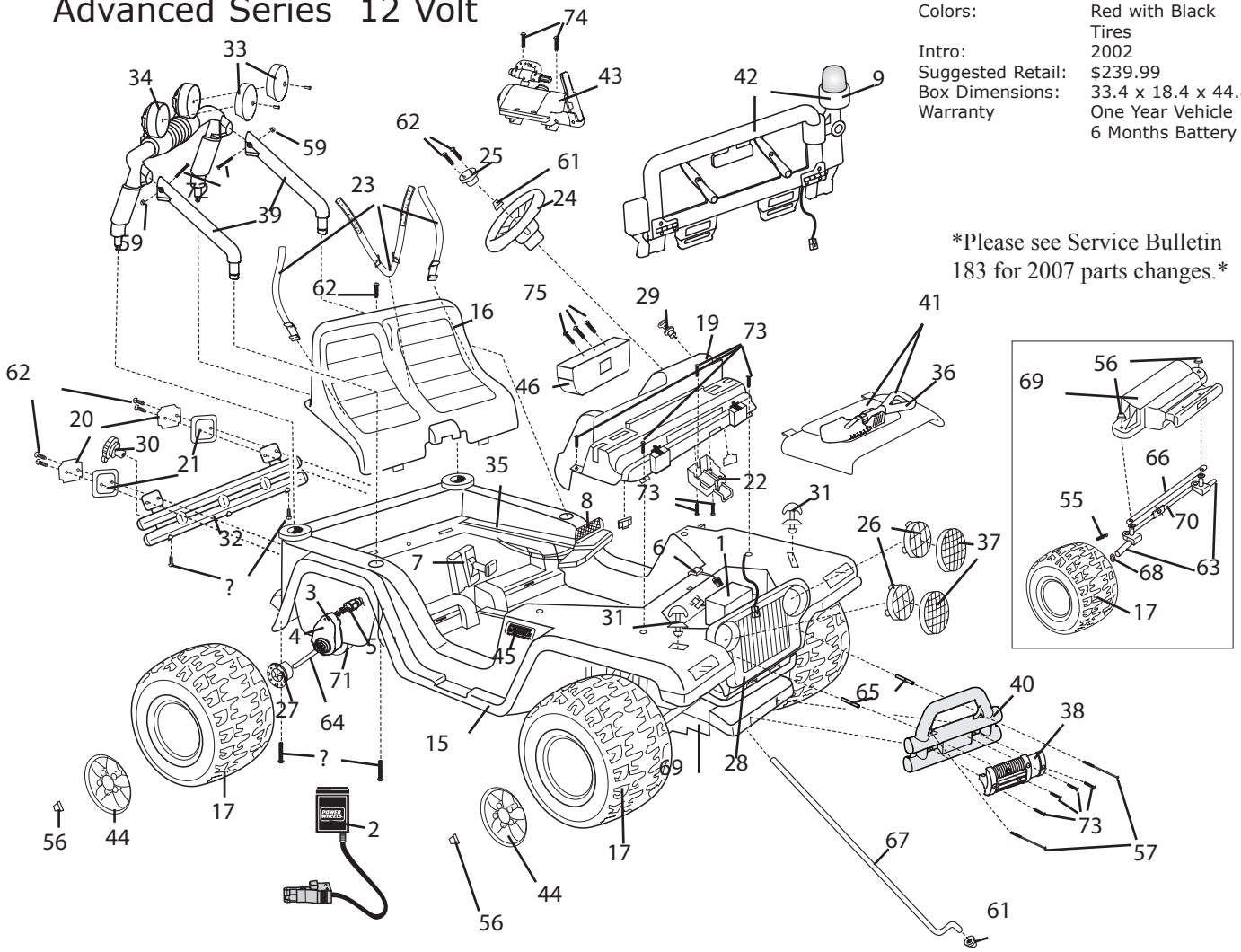

Item No.	Description	Part No.	Qty.
Working / Electrical Parts			
1	12V Battery	00801-0638	
2	Charger fused charger (probe)	00801-0972	1
3	**Motor Gearbox Assembly**	**00968-2909**	**2**
4	**Gearbox W/out Motor**	**00968-2805**	**2**
5	**Motor Pinion Assembly**	**00968-2701**	**2**
6	**Main Harness Assembly**	**78490-9699**	**1**
7	Shifter Assm.	74310-9239	1
8	Footboard Assm.	75840-9829	1
9	Light Assm.(bulb & light harn)	B0155-9479	1
Plastic / Other Parts			
15	Body N/A	B0155-2909	1
16	Seat	78490-2319	1
17	Wheel	74460-2459	4
19	Dash w/sound unit	3800-7131	1
20	Lens Set Taillight	73233-2279	1
21	Housing Set Taillight	73233-2759	2
22	Battery Retainer Box Assm	74020-9819	1
23	Seat Belt (3 Pc)	74310-5339	1
24	Steering Wheel	74440-2379	1
25	Steering Wheel Cap	74550-2729	1
26	Headlight Lens Blue	74440-2879	2
27	Wheel Driver	74460-2249	2
28	Grill Black	74460-2849	1
29	Key Housing Assm.	74765-9369	1
30	Gas Cap	75597-2089	1

N/A = Not Available

Qty. Item	Description	Part No.	Qty.
31	Hood Latch Assm.	78490-9559	2
32	Rear Bumper	B0155-2039	1
33	Light Cover	B0155-2069	2
34	Rollbar	B0155-2219	1
35	Channel cover	B0155-2289	1
36	Shovel	B0155-2449	1
37	Headlight Guard	B0155-2539	2
38	Winch	B0155-2649	1
39	Sportbar Support	B0155-2769	2
40	Brushguard	B0155-2789	1
41	Hood with Shovel	B0155-9129D	1
42	Windshield with Light Assm (includ bulb & light harness)	B0155-9609D	1
43	Water Cannon Assm.	B0155-9809	1
44	Hubcap	B1501-2579	4
45	PW Emblem	74460-9069	2
46	Sound Box	B0155-9419	1
Hardware / Metal Parts			
55	Washer 7/16	0801-0196	2
56	Cap Nut Black .437	0801-0226	4
57	Trusshead screw 8x7/8	0801-0228	2
58	#12 x 1.25 N/A	0801-0260	2
59	nylock nut 5/16	0801-0601	2
60	5/16 5 1/2 hex bolt N/A	0801-0605	2
61	Steering Column Cap	00801-1620	2
62	Screw #8 3/4	0912-8001	9

No. Qty.	Description	No.	
63	Front Axle	74440-4509	2
64	Rear Axle	74440-4519	1
65	Spacer Brushguard	74460-2069	2
66	Crossbar	74460-4419	1
67	Steering column	74526-4129	1
68	7/16 Round Bushing	74550-2689	2
69	Module N/A	B0155-2919	1
70	Steering Linkage Assm.	74440-9419A	1
71	Rear Module N/A	B0155-2929	1
72	Screw 8 32 x 1.625 N/A	00801-0604	2
73	#10 12 x 1 Panhead Screw N/A	0801-1256	10
74	#10 24 x 1 Screw N/A	00801-1266	2
		(Order hardware bag)	
75	#8 3-18 3/4 screw N/A	00405-2073	3
Parts Not Shown			
	Large Parts Bag	B0155-9269	1
	Small Parts Bag	B0155-9259	1
	Hardware Bag	B0155-9289	1
	Owners Manual	B0155-0920	1
	Decal Sheet	B0155-0310	
	Footswitch Plunger	**00801-0933**	**1**
	Adhesive clip (Harness)	0801-0313	1
	Wire Clip	B0155-4489	1
	Switch Control (Shifter-Rocker)	**00801-0923**	**1**

Rev.3/17/08

Bold and Underlined parts are to be purchased and installed by Service Centers only. These items may not be sold directly to consumers by Service Centers or Fisher-Price.