This Owner's Manual is provided and hosted by Appliance Factory Parts.

Appliance Factory Parts
Experts in BBQ, Humidifier, & Appliance Parts
1-800-955-7075

FISHER PRICE 78541-9563 Owner's Manual

Shop genuine replacement parts for FISHER PRICE 78541-9563

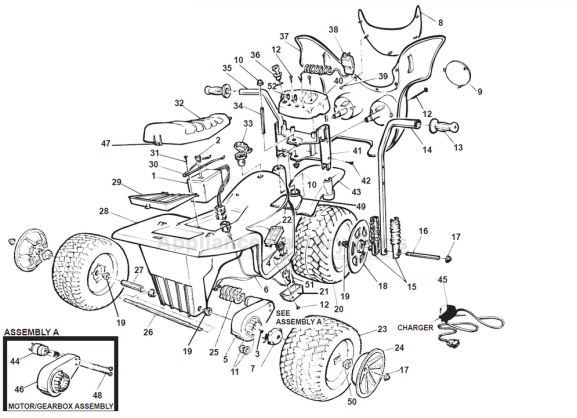

Find Your FISHER PRICE Ride On Parts - Select From 999 Models

-------- Manual continues below --------

78541-9563 Europe
78543-9563 Canada / Mexico
78544-9563 Australia

Kawasaki® ZX-7

Preschool Series
6-VOLT

Age Range: 1 1/2 - 4 Years
Weight Limit: 50 lbs.
Surfaces: Hard
Speed: 2.5 MPH
Colors: Blue / Purple
Intro: 5-22-95 U.S.

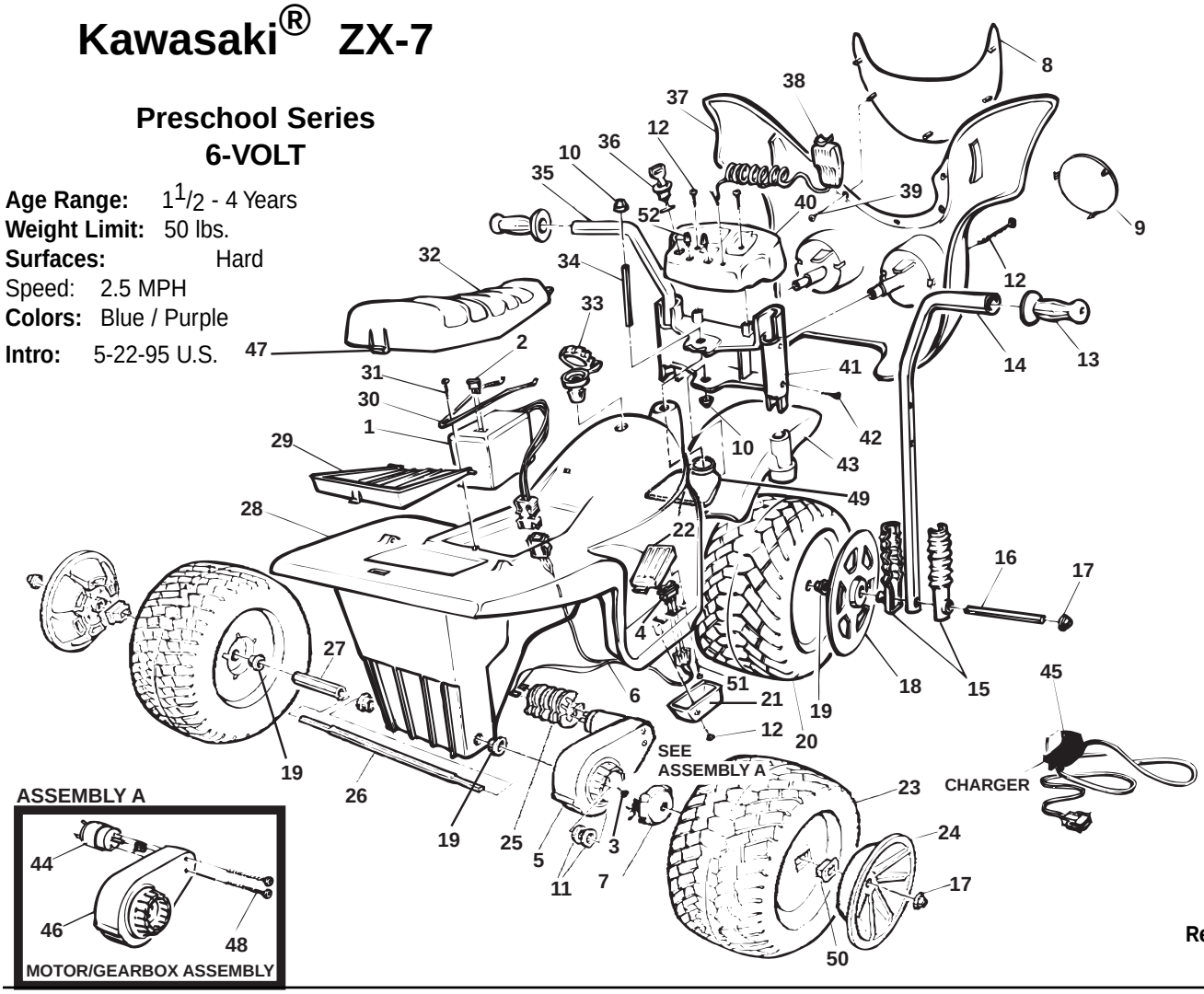

Rev. 08/12/03

Item No.	Description	Part No.	Qty.
1	Battery	00801-1234	1
2	25 amp Fuse	0801-0151	1
3	Wheel Driver Screw	0801-0255	1
4	**Foot Switch before 5-30-97)**	***75527-2709**	**1**
	(on or after 5-30-97)	***0801-0538**	**1**
5	Motor/Gearbox Assembly	74780-9509	1
6	**Wiring Harness N/A**	**77410-9799**	**1**
7	Driver N/A	77410-2239	1
8	Windshield N/A	74510-2179	1
9	Lens Cover Set	74510-915A	1
10	.354 Retainer w/Body	0801-0604	2
11	7/16" Washer	0801-0196	2
12	11/2" Screw	0801-0308	5
13	Handgrip	73560-2129	2
14	Right Handlebar	74510-421A	1
15	Shock Set N/A	78542-2089	1
16	Front Axle	74510-4519	1
17	.437 Retainer w/Body	0801-0226	4
18	Front Hubcap	78542-2579	2
19	Wheel Spacer N/A	74550-2689	5
20	Front Wheel N/A	74510-2459	1
21	Footboard Cover N/A	77410-2159	1
22	**Foot Pedl w/Spring Clip N/A**	**78560-9159**	**1**
23	Rear Wheel N/A	74510-2469	2
24	Rear Hubcap N/A	78542-2589	2
25	Motor Cover	74750-2359	1
26	Rear Axle	74510-4549	1
27	Axle Spacer Tube N/A	74510-4449	1
28	Body N/A	78410-2109	1
29	Trunk Lid N/A	78410-2329	1
30	Battery Retainer	74510-4439	1
31	7/8" Screw	0801-0228	1
32	Seat N/A	78410-2309	1
33	Gas Cap N/A	74780-2049	1
34	Pivot Pin N/A	74510-4429	1
35	Left Handlebar N/A	74510-4239	1
36	Key Housing N/A	74550-2439	1
37	Fairing N/A	78410-2729	1
38	Microphone	74550-9479	1
39	3/8" Screw N/A	0801-0219	2
40	Dash N/A	78542-2699	1
41	Swivel Bracket N/A	74510-2129	1
42	3/4" Screw	0801-0223	4
43	Fender N/A	78410-2249	1
44	**Motor w/ Pinion**	**74590-9539**	**1**
46	**Gearbox**	**74580-9269**	**1**
47	Lock Fastener	78570-2439	1
48	**Motor Bolt N/A**	**0801-0198**	**2**
49	Flex Plate N/A	74510-2159	1
50	Rectangular Wheel Bushing	77410-2679	2
51	1" Screw N/A	0801-0273	1
52	Radio Knobs	74510-2149	2
53	6 Volt Charger - **Europe N/A**	0801-0241	1
	6 Volt Charger - **Cana / Mex**	00801-0975	1
	6 Volt Charger - **Australia**	0801-0238	1

PARTS NOT SHOWN

#6 - 20 x 1" Screw for Swivel Bracket	0801-0254	1
1 1/4 Screw for Flex Plat N/A	0801-0216	2
Handlebar Plugs N/A	74510-2169	2
Large Parts Bag N/A	78549-9249	1
Small Parts Bag N/A	78410-9259	1
Literature Bag N/A	78549-0300	1
Adhesive Harness Clip	0801-0313	1
Main Decal Sheet N/A	78410-0330	1
Paper Decal Sheet N/A	78410-0320	1
Headlight Decal Sheet N/A	78410-0300	1

N/A = Not Available * See service bulletin 157 **Bold and Underlined parts are to be purchased and installed by Service Centers only. These items may not be sold directly to consumers by Service Centers or Fisher-Price.**

POWER WHEELS by Fisher-Price®