This Owner's Manual is provided and hosted by Appliance Factory Parts.

Appliance Factory Parts
Experts in BBQ, Humidifier, & Appliance Parts
1-800-955-7075

FISHER PRICE 76249-86400 Owner's Manual

Shop genuine replacement parts for FISHER PRICE 76249-86400

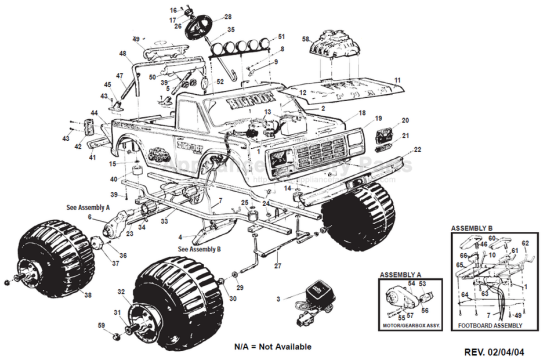

Find Your FISHER PRICE Ride On Parts - Select From 999 Models

-------- Manual continues below --------

76249-9993 / 86400

BIGFOOT® 4X4X4

Type H 12 Volt

Age Range:	**1-3 Yrs.**
Weight Limit:	**40 Lbs.**
Surfaces:	**Hard, Grass & Carpet**
Speed:	**2.5 / 5.0 MPH Forward**
	2.5 MPH Reverse
Colors:	**Blue Body**
	Black Wheels & Trim
Intro:	**1988**
Warranty	**90 Days Vehicle**
	6 Months Battery

Service bulletin 138
Service bulletin 144

This product is affected by the PW recall announced Oct 1998. Please confirm that the product is modified or remediated in accordance with policy.

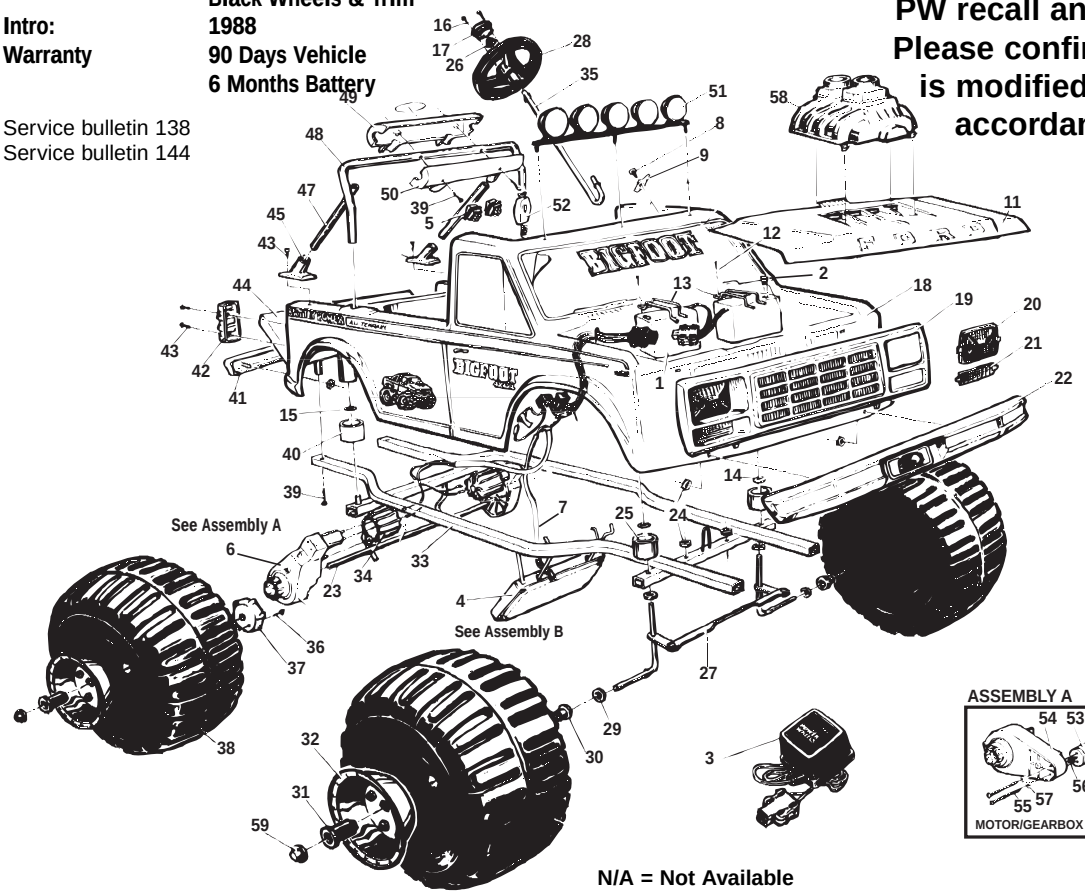

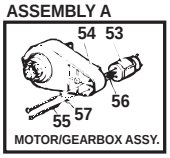

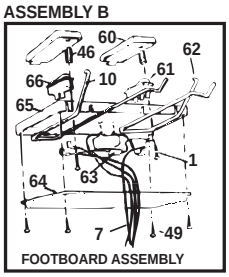

N/A = Not Available

REV. 02/04/04

Item No.	Description	Part No.	Qty.
1	†Battery (Type H)	00801-0712	2
2	30 Amp Fuse N/A	0801-0229	1
3	†12V Charger (Type H)	00801-0973	1
4	**Footboard/Wire Harness Assy. (Include. #7) (N/A)**	**80023-0005**	**1**
5	*&†Switch (Hi-Low Fwd.-Rev.)	80014-0073	2
6	3A Motor/Gearbox Assy.	74780-9509	2
7	**†Wiring Harness N/A**	**80064-0008**	**1**
8	X-Mas Tree Retainer (N/A)	80010-0018	1
9	Speedometer (N/A)	80001-0483	1
10	Footboard Supp (Right N/A	80023-0007	1
11	Hood (N/A)	80031-0003	1
12	Plascrews No. #8 x 3/4"	0801-0223	2
13	Battery Retainer (N/A)	80047-0090	2
14	Retainer 437 w/o Body N/A	0801-0324	2
	(Order Hardware Bag)	73518-9469	
15	Retainer .354 w/o Body	0801-0252	2
16	7/8" Phillips Plascrew	0801-0224	2
17	Steering Wheel Cap	74550-2729	1
18	Body (N/A)	80005-0011	1
19	Grill N/A	80065-0005	1
20	Headlight Lens Set N/A	80030-0077	1
21	Parking Lens Set (N/A)	78640-2759	1
22	Front Bumper (See bumper set under Parts not Shown) (N/A)	80008-0023	1
23	Rear Axle Assy (N/A)	80046-0150	1
24	Twist Nuts (N/A)	80047-0075	6
25	Front Shock Adapter N/A	73233-2539	2

Item No.	Description	Part No.	Qty.
26	.354 Cap Nut	0801-0604	1
27	Steering Linkage N/A	80055-0006	1
28	Steering Wheel (N/A)	74440-2379	1
29	Washer 7/16"	0801-0196	6
30	Axle Bushing	74550-2689	2
31	Hex Bushings	73233-2559	4
32	Hubcaps	74590-2579	4
33	Frame (N/A)	80051-0130	1
34	Motor Cover	74750-2359	2
35	Steering Column (N/A)	80054-0073	1
36	Screw (For Driver)	0801-0255	2
37	Drive	73233-2239	2
38	Wheel N/A	76188-2459	4
39	Screw 1-1/2"	0801-0308	4
40	Rear Shock Adapter N/A	73233-2549	2
41	Rear Bumper (See bumper set under parts not Shown) (N/A)	80008-0024	1
42	Taillight Set N/A	78640-2279	1
43	#8 x 1/2" Plascrew	0801-0202	12
44	Tailgate (N/A)	80057-0028	1
45	Roll-Bar Bracket Set N/A	78670-2199	1
46	Spring (N/A)	80066-0016	2
47	Roll-Bar Support (N/A)	78670-4239	2
48	Roll-Bar (N/A)	80049-0122	1
49	Roll-Bar Cover (Top) N/A	78670-2179	1
50	Roll-Bar Cov (Bottom N/A	78670-2189	1
51	KC Light Group N/A	78640-9239	1
52	Microphone	73233-9479	1

Item No.	Description	Part No.	Qty.
53	**Motor w/Pinion**	**74590-9539**	**2**
54	**3A Gearbox**	**74580-9269**	**2**
55	**Motor Bolts**	**0801-0269**	**4**
56	**Motor Drive Gear**	**74550-2269**	**2**
57	**Star Washer N/A**	**0801-0330**	**4**
58	Supercharger N/A	78670-2219	1
59	.437 Cap Nut	0801-0226	4
60	Pedal (N/A)	80041-0001	2
61	**Switch (Left)**	**75527-2709**	**1**
62	Footboard Support (Left) (N/A)	80023-0112	1
63	Thermal Resistor (N/A)	80014-0004	1
64	Footboard Cover (N/A)	80023-0007	1
65	Footboard (N/A)	80023-0003	1
66	**Switch (Right) (N/A)**	**0801-0150**	**1**

PARTS NOT SHOWN

Assembly Manual (N/A)	80034-0015	1
Use and Care Manual (N/A)	80034-0031	1
#6 x 3/8" Trusshead (Hood Screw) N/A	0801-0219	1
Bumper Set (N/A)	80008-0022	1
D-Lock Washer	0801-0329	1
Main Decal (N/A)	80017-0023	1
Windshield Decal	78640-6059	1
Antenna (N/A)		

Bold and Underlined parts are to be purchased and installed by Service Centers only. These items may not be sold directly to consumers by Service Centers or Fisher-Price.

***See service bulletin 144**

† See service bulletin 138

POWER WHEELS by Fisher-Price®