This Owner's Manual is provided and hosted by Appliance Factory Parts.

Appliance Factory Parts
Experts in BBQ, Humidifier, & Appliance Parts
1-800-955-7075

FISHER PRICE 74594-xxxx Owner's Manual

Shop genuine replacement parts for FISHER PRICE 74594-xxxx

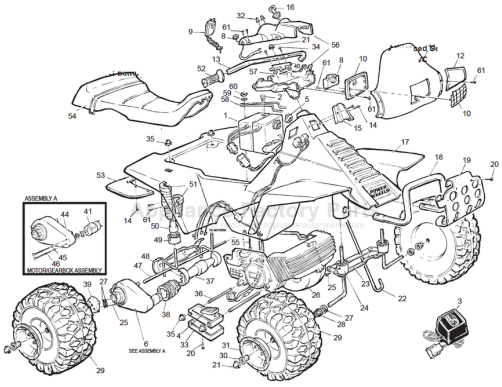

Find Your FISHER PRICE Ride On Parts - Select From 999 Models

-------- Manual continues below --------

This product is affected by the PW recall announced Oct 1998. Please confirm that the product is modified or remediated in accordance with policy.

Age Range:	**3-7 Yrs.**	**74591-xxxx**
Weight Limit:	**65 Lbs.**	**74592-**
Surfaces:	**Hard, Grass & Hills**	**74593-**
Speed:	**2.5 / 5.0 MPH Forward**	**74594-**
	2.5 MPH Reverse	**74595-**
Colors:	**White Body**	**74596**
	Blue & Green Trim	
Intro:	**2-1-95**	
Suggested Retail:	**$189.99**	
Box Dimensions:	**24-1/2" x 29-1/2" x 52-1/2"**	
Warranty	**90 Days Vehicle**	
	6 Months Battery	

KAWASAKI NINJA ATV

Advanced Series
12-VOLT

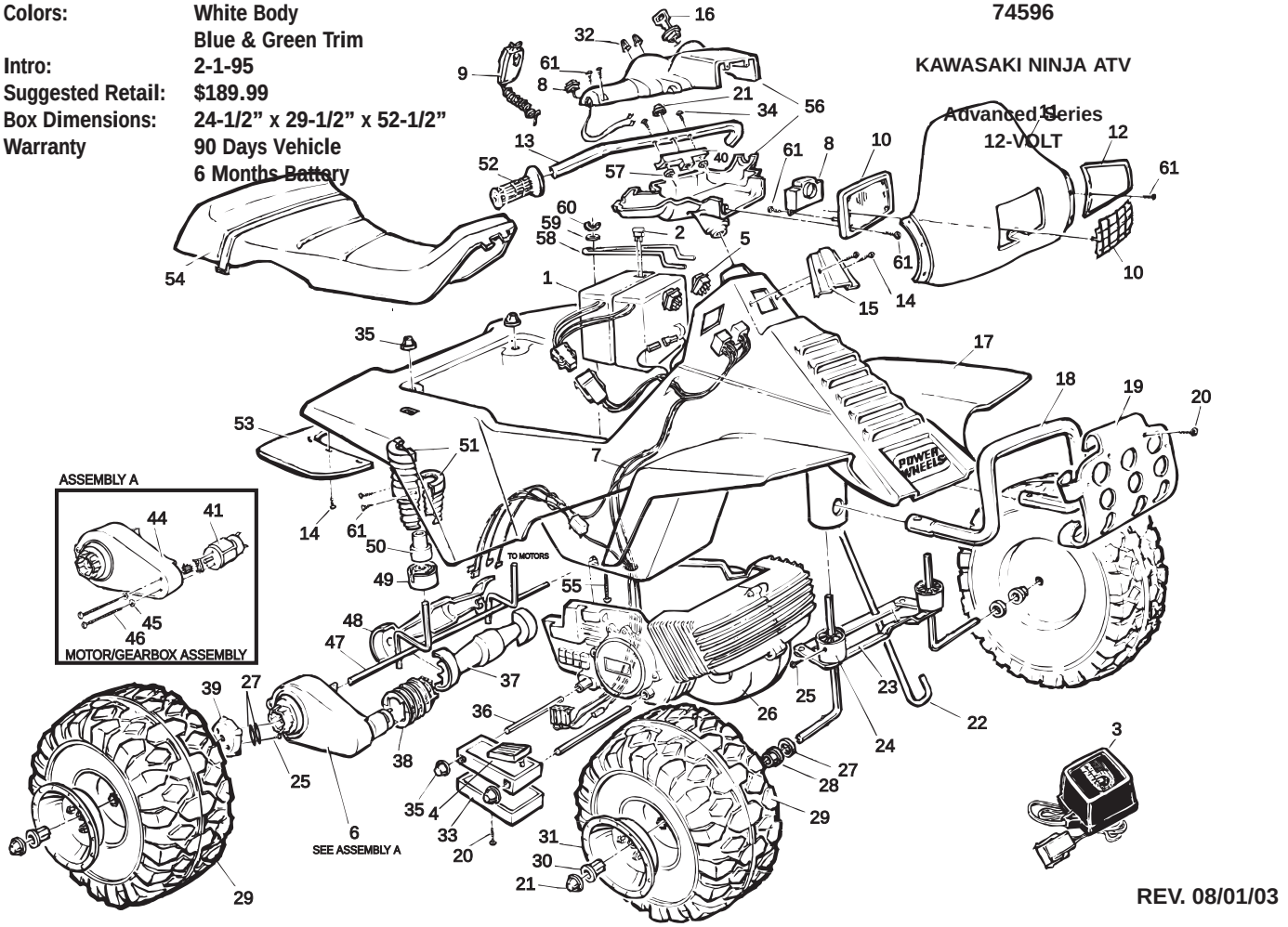

REV. 08/01/03

Item No.	Description	Part No.	Qty.	Item No.	Description	Part No.	Qty.	Item No.	Description	Part No.	Qty.
1	Battery	0801-0431	2	25	#10 x 1/2" Screw	0801-0255	4	51	Shock Set	74590-2089	2
2	30 Amp Fuse	0801-0229	2	26	False Motor	74590-2069	1	52	Handgrip	78570-2219	2
3	Charger	0801-0225	1	27	7/16" Washer	0801-0196	6	53	Mudflap Set	74590-2219	1
4	**Footswitch Assembly**	**74590-9149**	**1**	28	Axle Bushing	74550-2689	2	54	Seat	74590-2309A	1
5	Control Switch	0801-0148	2	29	Wheel	78570-2469	4	55	Carriage Bolt	0801-0305	1
6	Motor/Gearbox Assembly	78640-0640	2	30	Hex Bushing	73233-2559	4	56	Headlight Housing Set	74590-2149	1
7	**Main Wiring Harness**	**76816-9799**	**1**	31	Hubcap	74590-2579	4	57	Lock Nut	0801-0318	2
8	Sound/Switch Assy.	74590-9549	1	32	Radio Knobs	78570-2179	2	58	Battery Retainer	76262-4489	1
9	Microphone	73233-9479	1	33	Bottom Cover Footboard	74590-9159	1	59	#10 Washer	0801-0195	1
10	Headlight Rim/Guard	74590-2179A	1	34	#10 x 1-1/2" Phillips Screw	76222-4459	2	60	Wing Nut	0801-0317	1
11	Windshield	76816-2729	1	35	.354 Retainer w/Body	0801-0215	6	61	#6 x 1/2" Screw	0801-0280	22
12	Handgrip Guard Set	74590-2199	1	36	Footboard Support Rod	76262-4439	2				
13	Handlebar	76816-4229	1	37	Rear Axle Cover (inside)	74590-2139	1		**PARTS NOT SHOWN**		
14	#8 x 1/2" Phillips Screw	0801-0202	10	38	Motor Cover	*76803-2489	2		Power Wheels Emblem Set	74540-9069	1
15	Cover Plate	74590-2169	1	39	Driver	73233-2239	2		Decal Sheet	74590-0310	1
16	Key Housing	74550-2439	1	40	Handlebar Neck	76816-4289	1		Paper Decal	74590-0340	1
17	Body	74590-2109	1	**41**	**Motor w/Pinion**	**74590-9539**	**2**		Windshield Decal (in lit. bag)	74590-0330	1
18	Roll Bar	74590-9419	1	**44**	**Gearbox**	**74550-9279**	**2**		Footrest, Left	74590-2129	1
19	Brushguard	74590-2189	1	**45**	**Star Washer**	**0801-0330**	**4**		Literature Bag	74590-9029	1
20	#8 x 3/4" Screw	0801-0223	6	**46**	**Motor Bolts**	**0801-0269**	**4**		Large Parts Bag #1	74590-9249	1
21	.437 Retainer w/Body	0801-0214	5	47	Rear Axle	76816-4539	1		Large Parts Bag #2	74590-9259	1
22	Steering Column	76816-4249	1	48	Rear Axle Cover (Outside)	74590-2119	1		Small Parts Bag	74590-9229A	1
23	Steering Linkage	74590-4239	1	49	Rear Post Bushing	74590-2539	2				
24	Front Post Bushing	74590-2549	2	50	Rear Bushing w/Extension	74590-2669	2				

*Motor Cover available only for products manufactured after 7/13/95.

Bold and Underlined parts are to be purchased and installed by Service Centers only.
These items may not be sold directly to consumers by Service Centers or Fisher-Price.