This Owner's Manual is provided and hosted by Appliance Factory Parts.

Appliance Factory Parts
Experts in BBQ, Humidifier, & Appliance Parts
1-800-955-7075

FISHER PRICE 74540-86380-After_7-24-95 Owner's Manual

Shop genuine replacement parts for FISHER PRICE 74540-86380-After_7-24-95

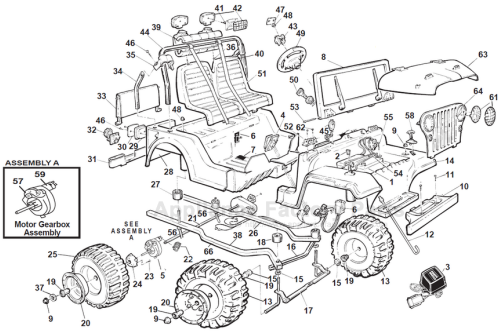

Find Your FISHER PRICE Ride On Parts - Select From 999 Models

-------- Manual continues below --------

For 74540-9993 Jeeps produced *after* 7-24-95

Age Range:	**3-7 Yrs.**
Weight Limit:	**130 Lbs.**
Surfaces:	**Hard, Grass & Hills**
Speed:	**2.5 / 5.0 MPH**
Colors:	**Red Body**
	Black Trim
Intro:	**7-24-95**
Suggested Retail:	**$189.99**
Warranty	**90 Vehicle**
	6 Months Battery

SERVICE BULLETINS 142 & 143

74540-9993 / 86380
SUPER SOUND JEEP® 4X4

Advanced Series

12-VOLT

This product is affected by the PW recall announced Oct 1998. Please confirm that the product is modified or remediated in accordance with policy.

3 AA Batteries Required For Sound Box

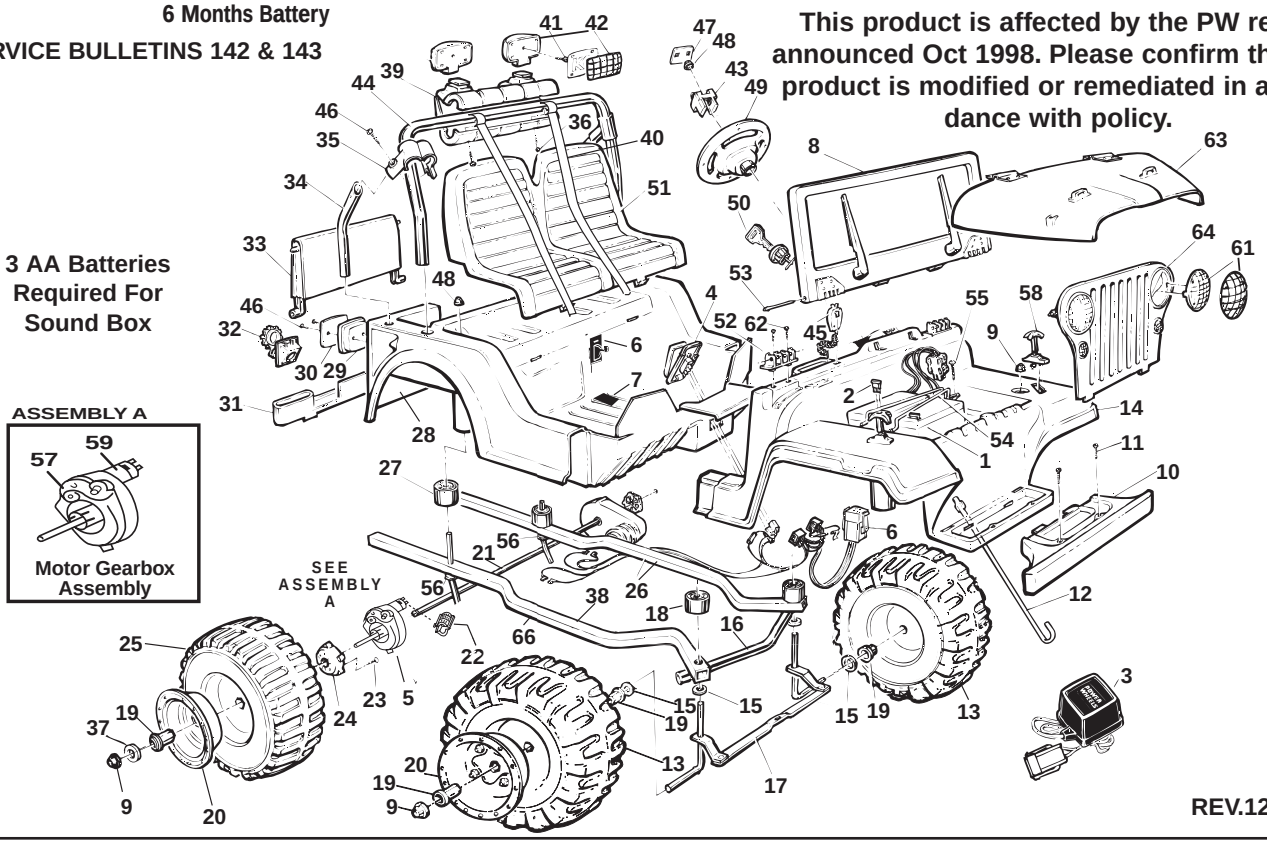

REV.12/10/03

Item No.	Description	Part No.	Qty.
1	Battery	00801-0712	2
2	30 AMP Fuse N/A	0801-0229	2
3	12 Volt Charger	00801-0973	1
4	*Footboard Assembly	73233-9159	1
5	#7 Motor/Gearbox Assy.	74440-2902	2
6	**Main Harness Shifter (includes switches) N/A**	**74540-9719**	**1**
7	Channel Cover N/A	78606-2419	1
8	Windshield Assembly N/A	73233-9639	1
9	.437 Cap Nut	0801-0226	6
10	Front Bumper N/A	73233-2519	1
11	8 x 3/4" Screw	0801-0223	2
12	Steering ColumnN/A	74540-4239	2
13	Front Wheel N/A	76266-2459	2
14	Front Body N/A	76231-2459	1
15	7/16" Washer	0801-0196	4
16	Front Bumper Support N/A	76817-4159	1
17	Steering Linkage N/A	74540-4249	1
18	Front Bushing N/A	73233-2539	2
19	Hex Bushing	73233-2559	6
20	Hubcap	73233-2579	4
21	Rear Axle Assembly N/A	76229-4139	1
22	Motor Cover	74750-2359	2
23	#10 x 1/2" Plascrew	0801-0255	4
24	Driver	73233-2239	2
25	Rear Wheel N/A	76231-2459	2

Item No.	Description	Part No.	Qty.
26	Left Siderail N/A	74540-4119	2
27	Rear Bushing N/A	73233-2549	2
28	Rear Body N/A	76817-2249	1
29	Taillight Housing Set	73233-2759	1
30	Taillight Lens Set	73233-2279	1
31	Rear Bumper N/A	74440-2039	1
32	Gas Cap/Flange Assy. N/A	73233-9249	1
33	Tailgate N/A	73243-2129	1
34	Light-Bar Support Tube N/A	74450-2249	2
35	Light-Bar Bracket Set	73233-2179	1
36	#6 x 1-1/2" Screw	0801-0221	2
37	Wheel Spacer	73233-2369	4
38	Right Siderail N/A	74540-4129	1
39	KC® Light Rack N/A	74440-2059	1
40	Seat belts N/A	74450-9309	1
41	#6 x 1/2" Phillips Screw	0801-0222	4
42	KC Light/Guard Assy N/A	73233-9219	1
43	Sound Module N/A	74540-9449	1
44	Light-Bar N/A	74450-4209	1
45	Microphone	73233-9479	1
46	#8 x 1" Screw N/A	0801-0224	6
47	Steering Wheel Plate	74526-2759	1
48	.354 Cap Nut	0801-0604	3
49	Steering Wheel N/A	74580-2619	1
50	Key Assembly	73233-2439	1
51	Seat N/A	76817-2309	1

Item No.	Description	Part No.	Qty.
52	*Windshield Hinge Set N/A	73233-2779	1
53	*#10 x 3" Screw N/A	0801-0256	2
54	Battery Retainer	74540-4419	1
55	#10 x 1" Screw	0801-0220	1
56	5/16" Washer	0801-0253	4
57	**#7 Gearbox Only**	**00968-2802**	**2**
58	Hoodlatch	74440-9559	2
59	**Motor/Pinion Assembly**	**N/A**	**2**
60	**Motor Bolts w/Nylok N/A**	**0801-0198**	**4**
61	Headlight/Guard Assy.	73233-9339	1
62	#8 x 1/2" Screw	0801-0202	4
63	Hood N/A	76817-2359	1
64	Grill N/A	73233-9809	1

PARTS NOT SHOWN		
Windshield Decal N/A	73243-6059	1
Radiator Decal N/A	74560-6029	1
Main Decal N/A	74549-6019	1
Literature Bag N/A	74540-9039	1
Hood Decal N/A	74540-6059	1
Switches (Located in shifter box)	00801-0923	2
Steering Wheel Tool	78640-2629	1

N/A = Not Available *See service bulletins 142, 143 & 147

Bold and Underlined parts are to be purchased and installed by Service Centers only. These items may not be sold directly to consumers by Service Centers or Fisher-Price.