This Owner's Manual is provided and hosted by Appliance Factory Parts.

Appliance Factory Parts
Experts in BBQ, Humidifier, & Appliance Parts
1-800-955-7075

FISHER PRICE 74536-AX4536 Owner's Manual

Shop genuine replacement parts for FISHER PRICE 74536-AX4536

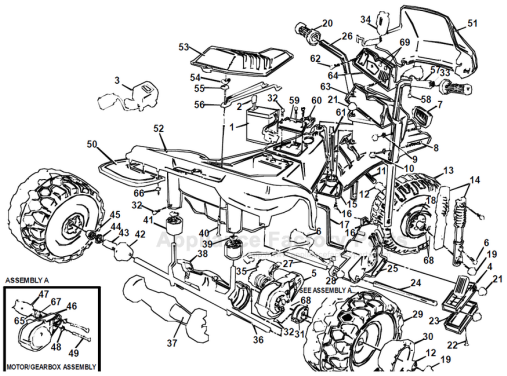

Find Your FISHER PRICE Ride On Parts - Select From 999 Models

-------- Manual continues below --------

PARTS PIECES TEILEN PIEZAS

CYCLE SOUND RAIDER™ 550

6 VOLT

Age Range:	**1-1/2 - 6 Yrs,**
Weight Limit:	**50 Lbs.**
Surfaces:	**Hard**
Speed:	**2.5 MPH Forward**
	2.5 MPH Reverse
Colors:	**Blue Body**
	Black Wheels
	Yellow Seat
	Red Trim
Intro:	**1994 (U.S.)**

(Generic Int'l)	**74539-9563 / 84539 / AX4539**
(Europe)	**74531-9563 / 8453901 / AX4531**
(U.K.)	**76124-9563 / 8453902 / AX6124**
(Can / Mex)	**74533-9563 / 8453903 / AX4533**
(Australia)	**74534-9563 / 8453904 / AX4534**
(H.K. / Sing.)	**74535-9563 / 8453905 / AX4535**
(Japan)	**74536-9563 / 8453906 / AX4536**

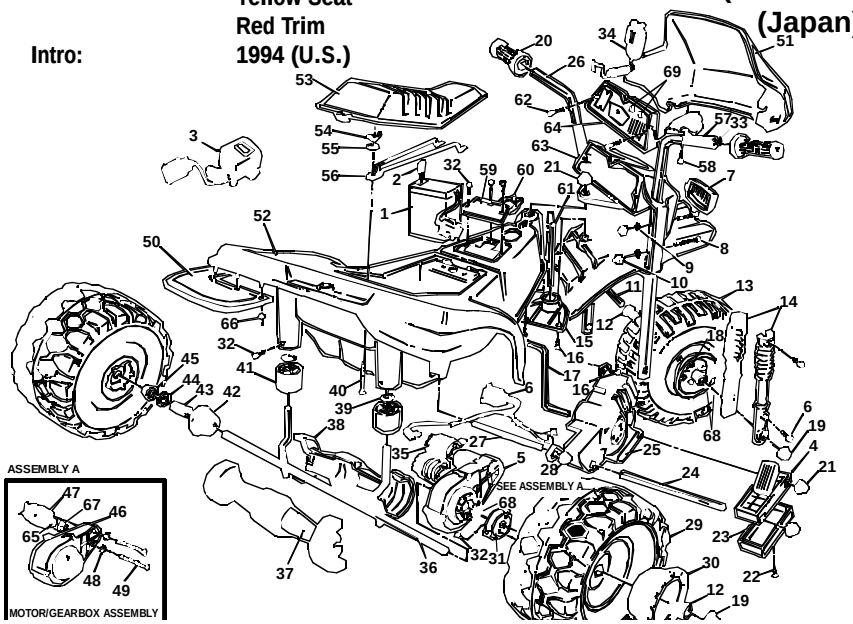

SERVICE BULLETIN 140

for (*) parts made on or before 9-20-94

Rev. 07/09/03T

Item # / Article No. / Warennr / Item Nº	Description / Description / Beschreibung / Descripción	Part No. / Piéce No. / Tiel-Nr. / Pieza Nº	Quantity / Quantité / Menge / Cantidad
1	Battery, Type H	0801-0431	1
2	25 amp Fuse Kit	0801-0447	1
3	Charger - 6 Volt	0801-0237	1
4	Footboard Assy.	76108-9159	1
5	3B Motor/Gearbox Assy	74530-9519	1
6	Wiring Harness	76112-9799	1
7	Headlight Lens	76112-2129	1
8	1-1/4" 10-32 Screw	76125-4459	4
9	Star Washer	76108-4419	4
10	Acorn Nut	0801-0218	4
11	* Front Axle	76115-4509	1
12	Hex Bushing	73233-2559	4
13	Front Wheel	76266-2459	1
14	Shock Set	76115-2339	2
15	* Flex Plate Base	76115-2259	1
16	#8 x 1/2" Plascrew	0801-0216	5
17	False Motor Support	80021-0074	1
18	Front Hubcap (White)	73233-2579	2
19	.437 Cap Nut (Black)	0801-0214	4
20	Handgrip	76115-2179	2
21	.354 Cap Nut (Black)	0801-0215	6
22	#8 x 2" Screw	0801-0268	1
23	Footboard Cover	76108-2169	1
24	Support Rod (Rear Footrest)	76108-4439	1
25	Right False Motor	76115-2139	1
26	* Left Handlebar	76115-4249	1
27	Support Rod (Rear Motor)	76108-2129	1
28	.250 Retainer	0801-0322	2
29	Rear Wheel	78570-2469	2
30	Rear Hubcap	74590-2579	2

Item # / Article No. / Warennr / Item Nº	Description / Description / Beschreibung / Descripción	Part No. / Piéce No. / Tiel-Nr. / Pieza Nº	Quantity / Quantité / Menge / Cantidad
31	Wheel Driver	73233-2239	1
32	#10 x 1/2" Screw	0801-0255	6
33	Handlebar Cap Plugs	74510-2169	4
34	Microphone/Cord	74550-9479	1
35	Motor Cover	74590-2489	1
36	*Rear Axle Assy (Inc 39 & 41)	76115-4549	1
37	Axle Cover (Outside)	76115-2169	1
38	Axle Cover (Inside)	76115-2159	1
39	Retainer .354 w/o Body	0801-0252	2
40	Carriage Bolt	0801-0305	1
41	Post Bushing	76092-2549	2
42	Hubcap w/o Shoulder	76108-2369	1
43	Long Spacer	76112-2139	1
44	Washer 7/16"	0801-0196	1
45	Wheel Bushing	74550-2689	1
46	3B Gearbox	74550-9279	1
47	6V Motor	74510-0640	1
48	Star Washers	0801-0330	2
49	Motor Bolt	0801-0269	2
50	Mudflap Set (Yellow)	74590-2219	1
51	Windshield	74525-2249	1
52	Body	74530-2109	1
53	Seat (Yellow)	76115-2819	1
54	Wing Nut	0801-0317	1
55	#10 Washer	76822-4409	1
56	Battery Retainer	76112-4419	1
57	*Right Handlebar	76115-4259	1
58	#8 x 3/4" Plascrew	0801-0223	5
59	Switch Plate	76115-2349	1
60	Gas Cap	76115-2249	1

Item # / Article No. / Warennr / Item Nº	Description / Description / Beschreibung / Descripción	Part No. / Piéce No. / Tiel-Nr. / Pieza Nº	Quantity / Quantité / Menge / Cantidad
61	Pivot Pin	76108-4429	1
62	#8 x 1-1/2" Screw	0801-0308	2
63	*Fender/Headlight	74530-9289	1
64	Sound Box	76115-9459	1
65	D Lock Washer	0801-0329	1
66	Retainer w/o Body	78480-2249	8
67	Motor Drive Gear	74550-2269	1
68	1/4" Plastic Washer	73233-2369	5
69	Radio Knobs	76115-2189	2

PARTS NOT SHOWN
PIECES NON ILLUSTREES
NICHT GEZEIGTE TEILE
PIEZAS NO MOSTRADAS

Decal Sheet	74530-0310	1
Left False Motor	76115-2149	1
Left Footrest	76108-2179	1
Literature Bag	74530-9019	1
Flex Plate Cover	78570-2139	1
Use & Care Manual	74530-CCCC	1

REPLACEMENT CHARGERS
CHARGEURS DE RECHANGE
ERSATZAUFLADUNGSGERATE
CARGADORES DE REPUESTO

Charger, 6V-120V-60Hz-CM
80004-0087 1
Charger, S6V-240V-50Hz-AS
80004-0156 1
Charger, 6V-220V-50Hz-UK 800

Bold and Underlined parts are to be purchased and installed by Service Centers only. These items may not be sold directly to consumers by Service Centers or Fisher-Price.

***See Service Bulletin**