This Owner's Manual is provided and hosted by Appliance Factory Parts.

Appliance Factory Parts
Experts in BBQ, Humidifier, & Appliance Parts
1-800-955-7075

# FISHER PRICE 74531-9563 Owner's Manual

Shop genuine replacement parts for FISHER PRICE 74531-9563

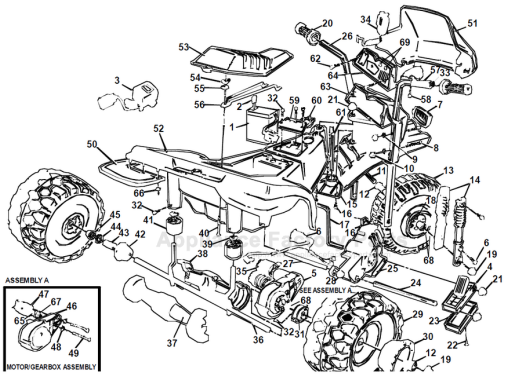


Find Your FISHER PRICE Ride On Parts - Select From 999 Models

-------- Manual continues below --------

# PARTS PIECES TEILEN PIEZAS

## CYCLE SOUND RAIDER™ 550

**6 VOLT**

| | |
|---|---|
| **Age Range:** | **1-1/2 - 6 Yrs,** |
| **Weight Limit:** | **50 Lbs.** |
| **Surfaces:** | **Hard** |
| **Speed:** | **2.5 MPH Forward** |
| | **2.5 MPH Reverse** |
| **Colors:** | **Blue Body** |
| | **Black Wheels** |
| | **Yellow Seat** |
| | **Red Trim** |
| **Intro:** | **1994 (U.S.)** |

| | |
|---|---|
| **(Generic Int'l)** | **74539-9563 / 84539 / AX4539** |
| **(Europe)** | **74531-9563 / 8453901 / AX4531** |
| **(U.K.)** | **76124-9563 / 8453902 / AX6124** |
| **(Can / Mex)** | **74533-9563 / 8453903 / AX4533** |
| **(Australia)** | **74534-9563 / 8453904 / AX4534** |
| **(H.K. / Sing.)** | **74535-9563 / 8453905 / AX4535** |
| **(Japan)** | **74536-9563 / 8453906 / AX4536** |

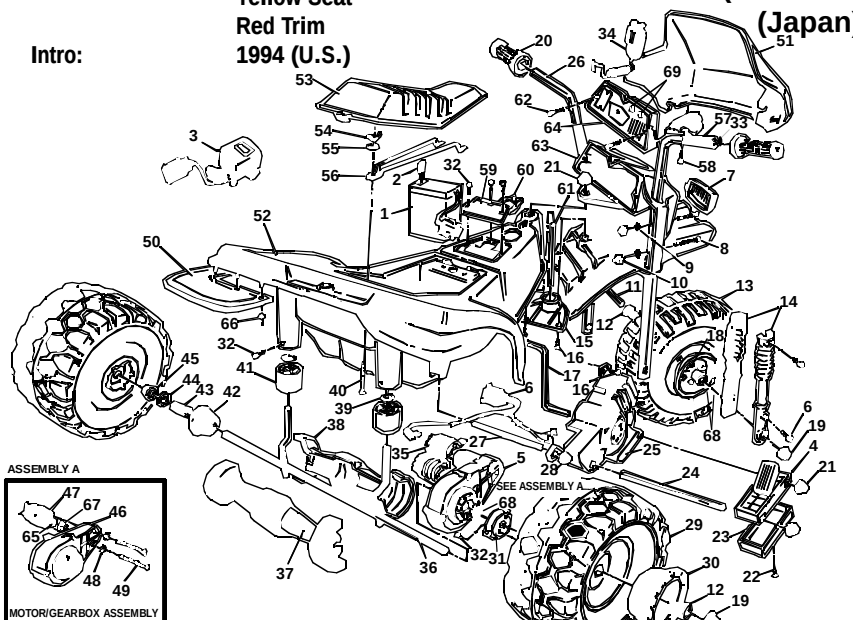


**SERVICE BULLETIN 140**

**for (*) parts made on or before 9-20-94**

Rev. 07/09/03T

| Item # / Article No. / Warennr / Item Nº | Description / Description / Beschreibung / Descripción | Part No. / Piéce No. / Tiel-Nr. / Pieza Nº | Quantity / Quantité / Menge / Cantidad |
|---|---|---|---|
| 1 | Battery, Type H | 0801-0431 | 1 |
| 2 | 25 amp Fuse Kit | 0801-0447 | 1 |
| 3 | Charger - 6 Volt | 0801-0237 | 1 |
| 4 | Footboard Assy. | 76108-9159 | 1 |
| 5 | 3B Motor/Gearbox Assy | 74530-9519 | 1 |
| 6 | Wiring Harness | 76112-9799 | 1 |
| 7 | Headlight Lens | 76112-2129 | 1 |
| 8 | 1-1/4" 10-32 Screw | 76125-4459 | 4 |
| 9 | Star Washer | 76108-4419 | 4 |
| 10 | Acorn Nut | 0801-0218 | 4 |
| 11 | * Front Axle | 76115-4509 | 1 |
| 12 | Hex Bushing | 73233-2559 | 4 |
| 13 | Front Wheel | 76266-2459 | 1 |
| 14 | Shock Set | 76115-2339 | 2 |
| 15 | * Flex Plate Base | 76115-2259 | 1 |
| 16 | #8 x 1/2" Plascrew | 0801-0216 | 5 |
| 17 | False Motor Support | 80021-0074 | 1 |
| 18 | Front Hubcap (White) | 73233-2579 | 2 |
| 19 | .437 Cap Nut (Black) | 0801-0214 | 4 |
| 20 | Handgrip | 76115-2179 | 2 |
| 21 | .354 Cap Nut (Black) | 0801-0215 | 6 |
| 22 | #8 x 2" Screw | 0801-0268 | 1 |
| 23 | Footboard Cover | 76108-2169 | 1 |
| 24 | Support Rod (Rear Footrest) | 76108-4439 | 1 |
| 25 | Right False Motor | 76115-2139 | 1 |
| 26 | * Left Handlebar | 76115-4249 | 1 |
| 27 | Support Rod (Rear Motor) | 76108-2129 | 1 |
| 28 | .250 Retainer | 0801-0322 | 2 |
| 29 | Rear Wheel | 78570-2469 | 2 |
| 30 | Rear Hubcap | 74590-2579 | 2 |

| Item # / Article No. / Warennr / Item Nº | Description / Description / Beschreibung / Descripción | Part No. / Piéce No. / Tiel-Nr. / Pieza Nº | Quantity / Quantité / Menge / Cantidad |
|---|---|---|---|
| 31 | Wheel Driver | 73233-2239 | 1 |
| 32 | #10 x 1/2" Screw | 0801-0255 | 6 |
| 33 | Handlebar Cap Plugs | 74510-2169 | 4 |
| 34 | Microphone/Cord | 74550-9479 | 1 |
| 35 | Motor Cover | 74590-2489 | 1 |
| 36 | *Rear Axle Assy (Inc 39 & 41) | 76115-4549 | 1 |
| 37 | Axle Cover (Outside) | 76115-2169 | 1 |
| 38 | Axle Cover (Inside) | 76115-2159 | 1 |
| 39 | Retainer .354 w/o Body | 0801-0252 | 2 |
| 40 | Carriage Bolt | 0801-0305 | 1 |
| 41 | Post Bushing | 76092-2549 | 2 |
| 42 | Hubcap w/o Shoulder | 76108-2369 | 1 |
| 43 | Long Spacer | 76112-2139 | 1 |
| 44 | Washer 7/16" | 0801-0196 | 1 |
| 45 | Wheel Bushing | 74550-2689 | 1 |
| 46 | 3B Gearbox | 74550-9279 | 1 |
| 47 | 6V Motor | 74510-0640 | 1 |
| 48 | Star Washers | 0801-0330 | 2 |
| 49 | Motor Bolt | 0801-0269 | 2 |
| 50 | Mudflap Set (Yellow) | 74590-2219 | 1 |
| 51 | Windshield | 74525-2249 | 1 |
| 52 | Body | 74530-2109 | 1 |
| 53 | Seat (Yellow) | 76115-2819 | 1 |
| 54 | Wing Nut | 0801-0317 | 1 |
| 55 | #10 Washer | 76822-4409 | 1 |
| 56 | Battery Retainer | 76112-4419 | 1 |
| 57 | *Right Handlebar | 76115-4259 | 1 |
| 58 | #8 x 3/4" Plascrew | 0801-0223 | 5 |
| 59 | Switch Plate | 76115-2349 | 1 |
| 60 | Gas Cap | 76115-2249 | 1 |

| Item # / Article No. / Warennr / Item Nº | Description / Description / Beschreibung / Descripción | Part No. / Piéce No. / Tiel-Nr. / Pieza Nº | Quantity / Quantité / Menge / Cantidad |
|---|---|---|---|
| 61 | Pivot Pin | 76108-4429 | 1 |
| 62 | #8 x 1-1/2" Screw | 0801-0308 | 2 |
| 63 | *Fender/Headlight | 74530-9289 | 1 |
| 64 | Sound Box | 76115-9459 | 1 |
| 65 | D Lock Washer | 0801-0329 | 1 |
| 66 | Retainer w/o Body | 78480-2249 | 8 |
| 67 | Motor Drive Gear | 74550-2269 | 1 |
| 68 | 1/4" Plastic Washer | 73233-2369 | 5 |
| 69 | Radio Knobs | 76115-2189 | 2 |

PARTS NOT SHOWN
PIECES NON ILLUSTREES
NICHT GEZEIGTE TEILE
PIEZAS NO MOSTRADAS

| | | |
|---|---|---|
| Decal Sheet | 74530-0310 | 1 |
| Left False Motor | 76115-2149 | 1 |
| Left Footrest | 76108-2179 | 1 |
| Literature Bag | 74530-9019 | 1 |
| Flex Plate Cover | 78570-2139 | 1 |
| Use & Care Manual | 74530-CCCC | 1 |

REPLACEMENT CHARGERS
CHARGEURS DE RECHANGE
ERSATZAUFLADUNGSGERATE
CARGADORES DE REPUESTO

Charger, 6V-120V-60Hz-CM
80004-0087 1
Charger, S6V-240V-50Hz-AS
80004-0156 1
Charger, 6V-220V-50Hz-UK 800

**Bold and Underlined parts are to be purchased and installed by Service Centers only. These items may not be sold directly to consumers by Service Centers or Fisher-Price.**

***See Service Bulletin**