This Owner's Manual is provided and hosted by Appliance Factory Parts.

Appliance Factory Parts
Experts in BBQ, Humidifier, & Appliance Parts
1-800-955-7075

FISHER PRICE 73680-83680 Owner's Manual

Shop genuine replacement parts for FISHER PRICE 73680-83680

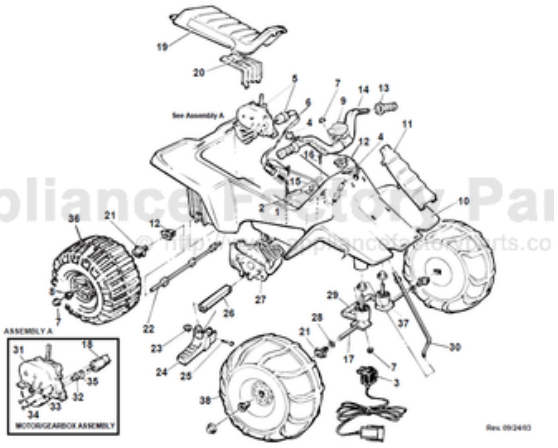

Find Your FISHER PRICE Ride On Parts - Select From 999 Models

-------- Manual continues below --------

Age Range:	**1-3 Yrs.**
Weight Limit:	**40 Lbs.**
Surfaces:	**Hard, Grass & Carpet**
Speed:	**1 MPH**
Colors:	**White Body**
	Pink Tires & Trim
	Purple Seat & Handlebars
Intro:	**1994**
Suggested Retail:	**$79.95 - 89.95**
Warranty	**90 Days Vehicle**
	6 Months Battery

73680-9993 / 83680
BALLET BARBIE®

Toddler Series
Type H Mini 6 Volt

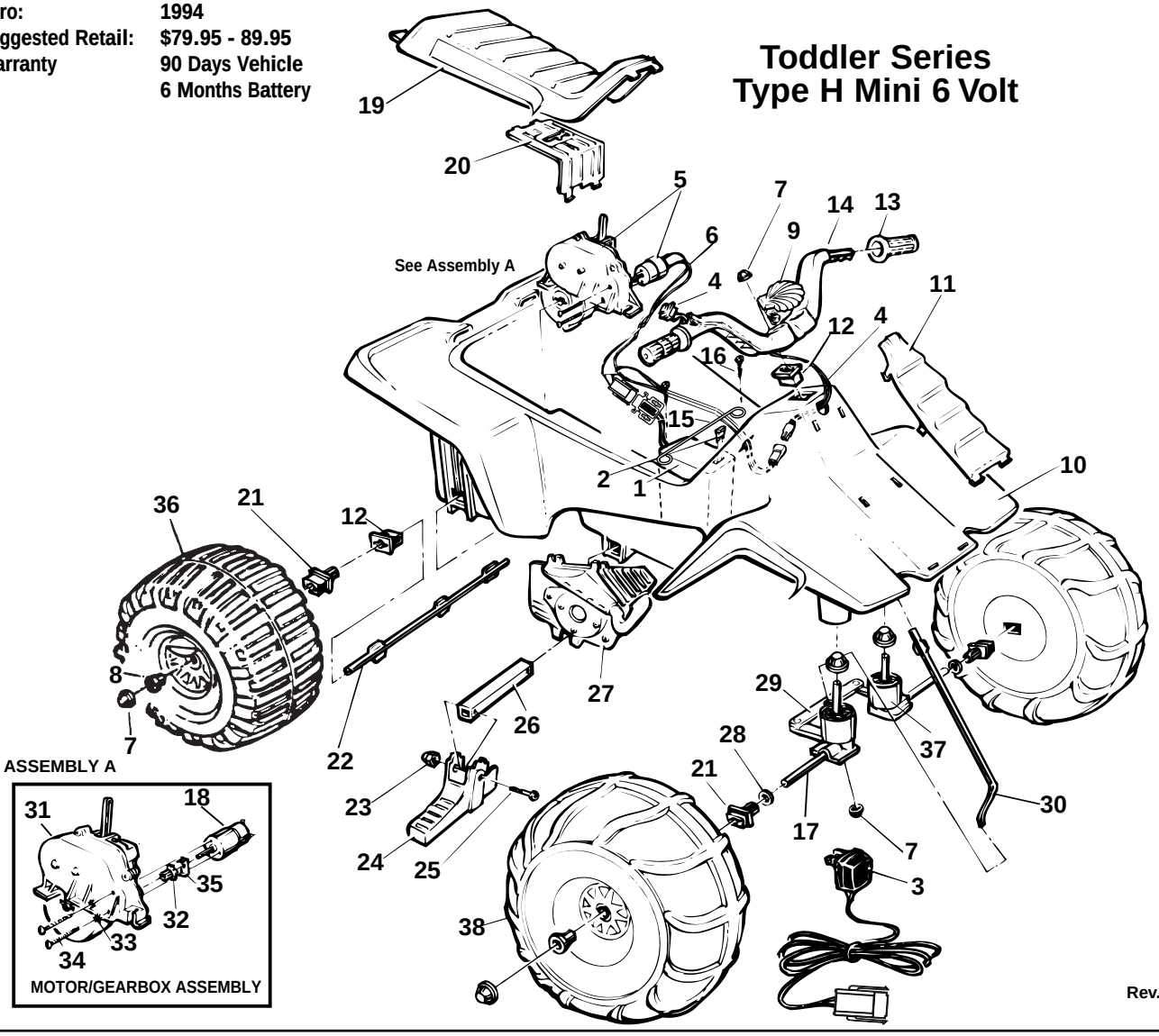

Rev. 09/24/03

Item No.	Description	Part No.	Qty.
1	Battery 6 Volt	00801-1234	1
2	25 Amp Fuse Kit	0801-0151	1
3	Charger	00801-0975	1
4	Switch Assembly	78560-9799	1
5	#5 Motor Gearbox Assy	74504-9519	1
6	**Main Wiring Harness (N/A)**	**74504-9059**	**1**
7	.354 Cap Nut	0801-0548	8
8	Wheel Bushing	78560-2679	4
9	Microphone N/A	74780-9479	1
10	Body (N/A)	77440-2109	1
11	Grill N/A	73680-2809	1
12	Bushing w/o Extension	74504-2549	2
13	Handgrips N/A	73670-2129	2
14	Handlebar Switch Assy N/A.	80029-0047	1
15	Battery Retainer	74504-4429	1
16	#8 x 7/8" Trusshead Screw	0801-0228	2

Item No.	Description	Part No.	Qty.
17	Front Axle	74504-4509	2
18	**Motor w/Pinion**	**74590-9539**	**1**
19	Seat N/A	73680-2819	1
20	Motor Cover	73560-9489	1
21	Bushing w/Long Extension	78560-2659	2
22	Rear Axle	74504-4539	1
23	Acorn Nut N/A	0801-0218	2
24	Footpeg N/A	73680-2159	2
25	1-1/4" Shoulder Bolt	0801-0304	2
26	Footpeg Support	74504-2129	1
27	False Motor Set N/A	73670-2119	1
28	5/16" Washer	0801-0253	2
29	Steering Linkage	74504-4219	1
30	Steering Column	76940-4239	1
31	**#5 Gearbox**	**72629-9259**	**1**
32	**Motor Drive Gear N/A**	**74504-2259**	**1**

Item No.	Description	Part No.	Qty.
33	**Star Washer N/A**	**0801-0330**	**2**
34	**Motor Bolt**	**0801-0269**	**2**
35	**D Lock Washer**	**0801-0329**	**1**
36	Rear Wheel	76980-2469	2
37	Front Post Bushing N/A	73680-2539	2
38	Front Wheel N/A	73670-2469	2

PARTS NOT SHOWN		
Tassels	73680-2129	2
Decal Sheet N/A	80017-0270	1
Literature Bag N/A	80034-0553	1
Mylar Decal Sheet N/A	80017-0271	1
Lace Scrunchie Set (N/A)	80001-0397	1

N/A = Not Available

Bold and Underlined parts are to be purchased and installed by Service Centers only. These items may not be sold directly to consumers by Service Centers or Fisher-Price.

POWER WHEELS by Fisher-Price®