This Owner's Manual is provided and hosted by Appliance Factory Parts.

Appliance Factory Parts
Experts in BBQ, Humidifier, & Appliance Parts
1-800-955-7075

FISHER PRICE 73566-9563 Owner's Manual

Shop genuine replacement parts for FISHER PRICE 73566-9563

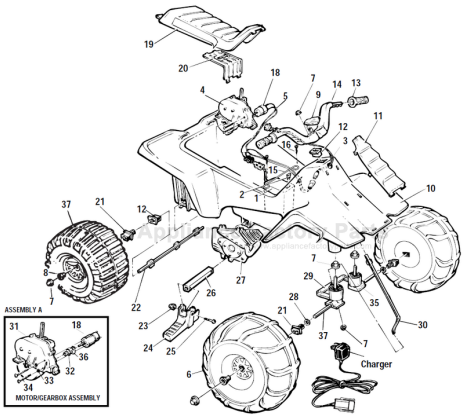

Find Your FISHER PRICE Ride On Parts - Select From 999 Models

-------- Manual continues below --------

PARTS PIECES TEILEN PIEZAS

POWER WHEELS by Fisher-Price®

LIL SUZUKI®

Age Range:	**1-3 Yrs.**
Weight Limit:	**40 Lbs.**
Surfaces:	**Hard, Grass & Carpet**
Speed:	**1 MPH**
Colors:	**Yellow Body**
	Blue Seat & Handlebars
	Black Tires
Intro:	**1994 (U.S.)**

(Generic Int'l)	**73569-9563 / 83569 / AX3569**
(Europe)	**73561-9563 / 8356901 / AX3561**
(U.K.)	**73562-9563 / 8356902 / AX3562**
(Can / Mex)	**73563-9563 / 8356903 / AX3563**
(Australia)	**73564-9563 / 8356904 / AX3564**
(H.K. / Sing.)	**73565-9563 / 8356905 / AX3565**
(Japan)	**73566-9563 / 8356906 / AX3566**

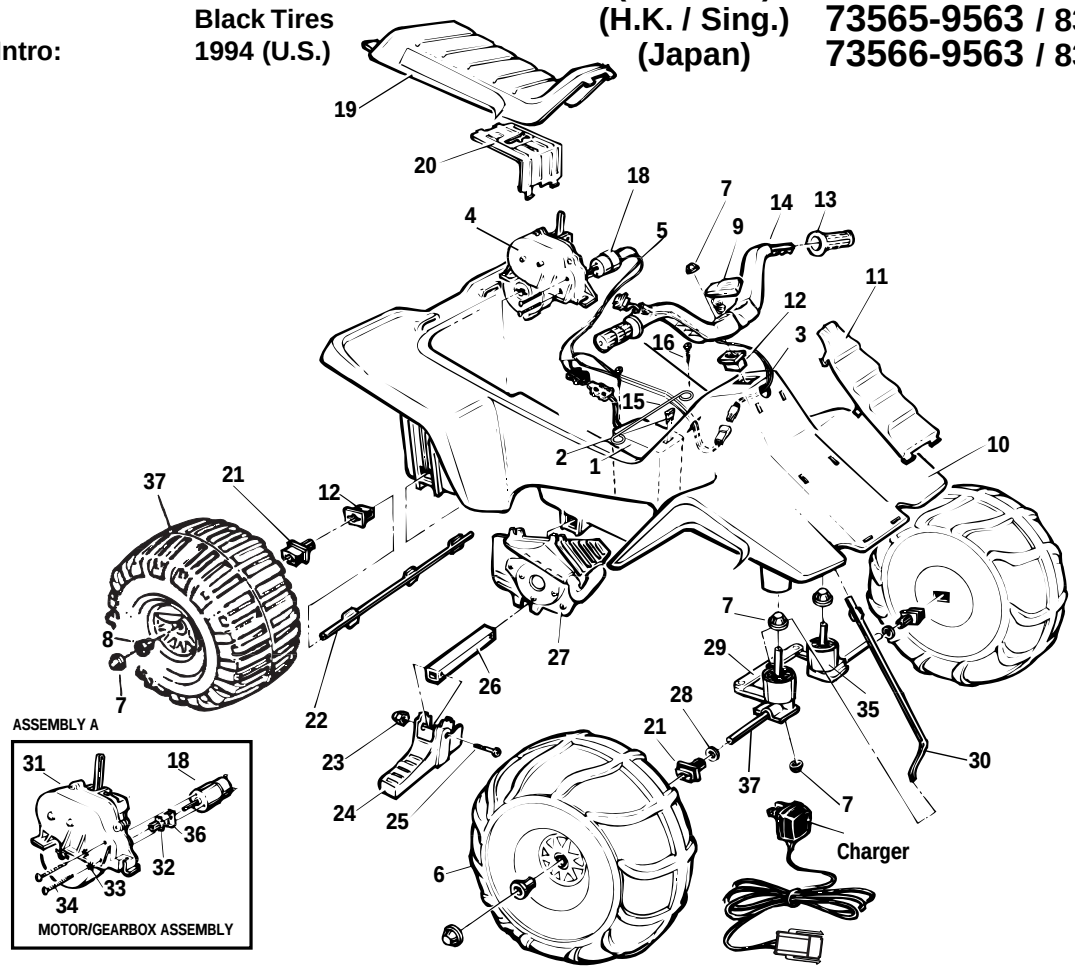

Rev. 07/08/03

Item # / Article No. / Warennr / Item Nº	Description / Description / Beschreibung / Descripción	Part No. / Piéce No. / Tiel-Nr. / Pieza Nº	Quantity / Quantité / Menge / Cantidad
1	Battery 6 Volt	0801-0431	1
2	25 Amp Fuse Kit (2)	0801-0447	1
3	Switch Assm.	78560-2799	1
4	#5 Motor Gearbox Assm	74504-9519	1
5	**Wiring Harness (main)**	**74504-9059**	**1**
6	Front Wheel	73237-2469	2
7	.354 Cap Nut	0801-0251	8
8	Wheel Bushing	78560-2679	4
9	Microphone	74550-9479	1
10	Body	77440-2109	1
11	Grill (NLA)	80065-0032	1
12	Bushing w/o Extension	74504-2549	2
13	Handgrips	73560-2129	2
14	Handlebar/Switch Assm. (NLA)	80029-0019	1
15	Battery Retainer	74504-4429	1
16	#8 x 7/8" Trusshead Screw	0801-0228	2
17	Front Axle	74504-4509	2
18	**Motor w/Pinion**	**74590-9539**	**1**
19	Seat (NLA)	80067-0037	1
20	Motor Cover	73560-9489	1
21	Bushing w/Long Extension	78560-2659	4
22	Rear Axle	74504-4539	1
23	Acorn Nut	0801-0218	2
24	Footpeg	77440-2159	2
25	1-1/4" Shoulder Bolt	0801-0304	2
26	Footpeg Support	74504-2129	1
27	False Motor Set	80021-0027	1
28	5/16" Washer	0801-0253	2
29	Steering Linkage	74504-4219	1
30	Steering Column	80054-0046	1
31	**#5 Gearbox Only**	**72629-9259**	**1**
32	Motor Drive Gear	74504-2259	1
33	**Star Washer**	**0801-0330**	**2**
34	**Motor Bolt**	**0801-0269**	**2**
35	Front Post Bushing (NLA)	80009-0050	2
36	D Lock Washer	0801-0329	1
37	Rear Wheel	73237-2459	2

PARTS NOT SHOWN

Literature Bag	80034-0542	1
Decal Sheet	73560-0310	1

REPLACEMENT CHARGERS
CHARGEURS DE RECHANGE
ERSATZAUFLADUNGSGERATE
CARGADORES DE REPUESTO

Charger, 6V-220V-50Hz-CT (NLA)	80004-0125	1
Charger, 6V-240V-50Hz-UK (NLA)	80004-0126	1
Charger, 6V-120V-60Hz-CM	0801-0243	1
Charger, S6V-240V-50Hz-AS	0801-0238	1
Charger, 6V-220V-50Hz-UK (NLA)	80004-0157	1

NLA = No Longer Available

Bold and Underlined parts are to be purchased and installed by Service Centers only. These items may not be sold directly to consumers by Service Centers or Fisher-Price.