This Owner's Manual is provided and hosted by Appliance Factory Parts.

Appliance Factory Parts
Experts in BBQ, Humidifier, & Appliance Parts
1-800-955-7075

VIKING DSCD130-4B Owner's Manual

Shop genuine replacement parts for VIKING DSCD130-4B

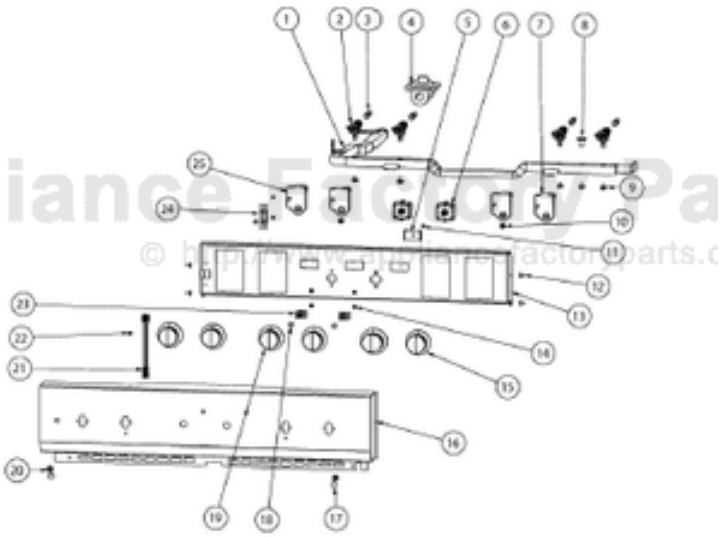

Find Your VIKING Range Hoods Parts - Select From 411 Models

-------- Manual continues below --------

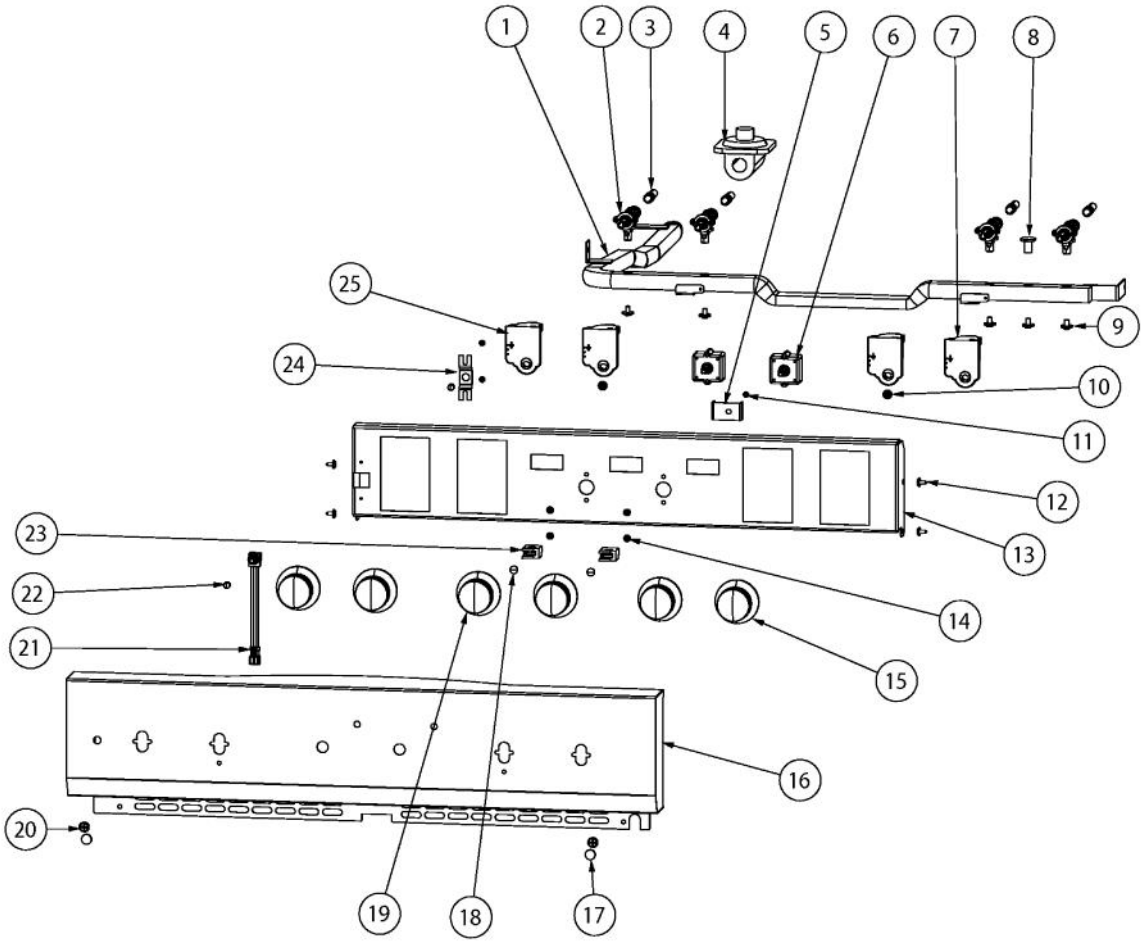
1
2
3
4
5
6
7
8
9
10
11
12
13
14
15
16
17
18
19
20
21
22
23
24
25

Ref #	Part Number	Qty.	Description
1	015280-000	1	MANIFOLD, 30 DESIGNER RANGE
2	PA010157	4	SUB TO 003515-000 - RANGE TOP BURNER VALVE
3	PB020190	4	10 FLEX TUBE
4	PA070001	1	PRESSURE REGULATOR (NAT.)
4	000714-000	1	LP REGULATOR
5	A2001361	1	BACK SPACER (VGSC/VGSS)
6	PJ030035	1	THERMOSTAT
7	PA020058	1	IRIS SINGLE SPARK MODULE
8	002884-000	1	MANIFOLD PLUG
9	PD010012	5	VALVE BOLT 1/4-20 UNC-2B 5/16 M.S.
10	PD020046	2	NO.8 X 1/2 SCREWS
11	PD020006	3	NO.6-32 X 1/4 PH.PAN HD. T(F)
12	PD020032	3	SRW-8(A)X3/8PH.WFR HD 7/16DIAXNICL
13	014551-000	1	CONTROL PANEL MOUNTING
14	PD020269	4	NO.8 PAN HEAD SCREW
15	PA010163	4	DGRT KNOB-CHROME W/BLACK SLEEVE
16	014467-000	1	LANDING LEDGE
17	PD040004	2	GROMMET BUMPER
18	015174-000	2	LENS, BLUE (BEFORE 3/3/10)
NI	015043-000	2	INDICATOR, LIGHT, BLUE LED (ON OR AFTER 3/3/10)
19	PA010226	2	SELECTOR KNOB W/BLACK SLEEVE
20	PD020033	2	SRW-NO.10-24X1/2T(23)PH.WFR HD (NKL)
21	G40015469	1	LIGHT SWITCH ASSEMBLY
22	PA010093	2	DESIGNER OVEN LT SWITCH KNOB
23	015170-000	2	HOUSING, LIGHT, BLUE NEON, 125V (BEFORE 3/3/10)
NI	015043-000	2	INDICATOR, LIGHT, BLUE LED (ON OR AFTER 3/3/10)
24	015105-000	1	BRACKET, SW
25	PA020058	3	IRIS SINGLE SPARK MODULE
NI	PJ030033	1	SELECTOR (10 POS)

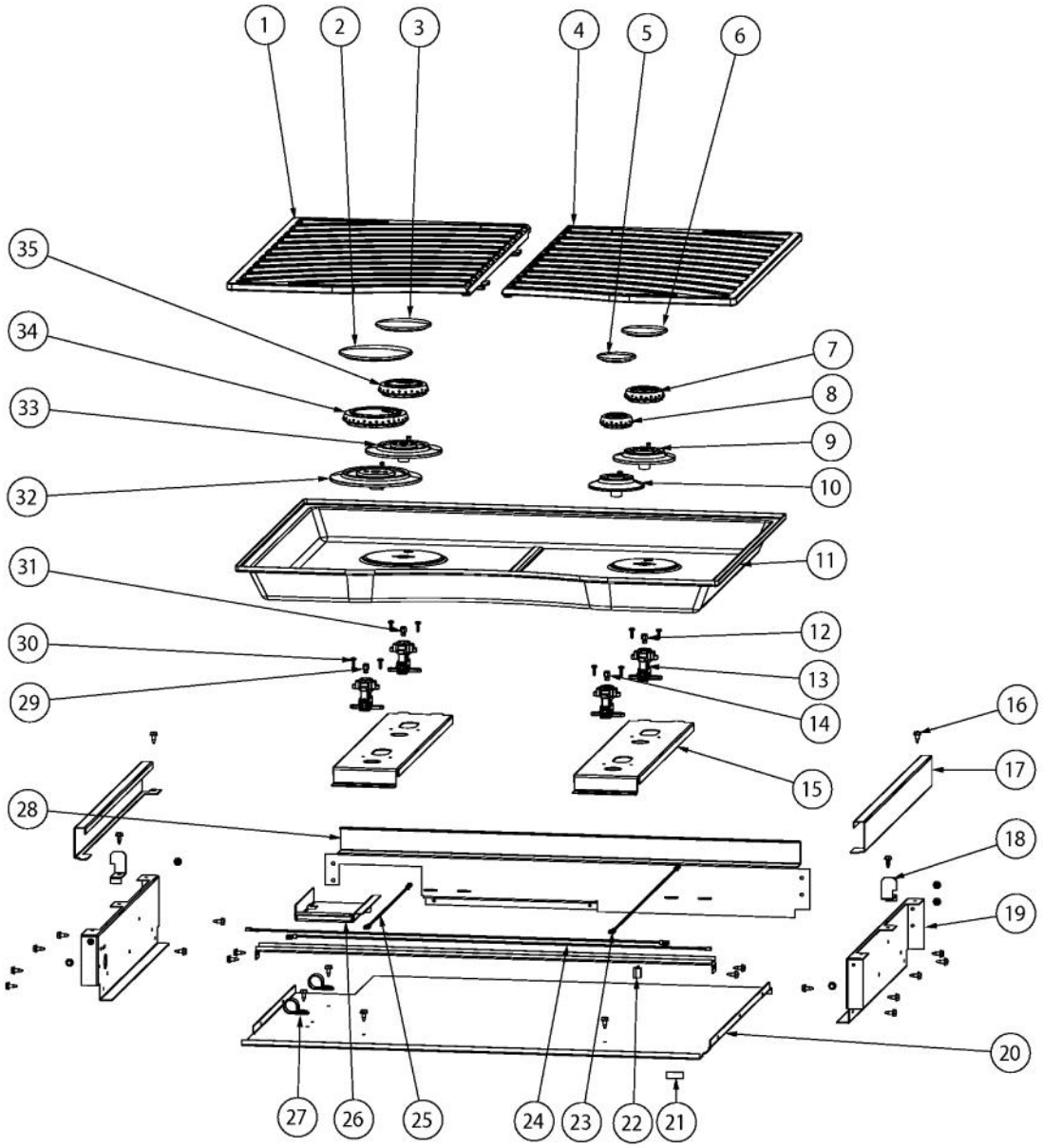
1
2
3
4
5
6
35
34
33
32
31
30
29
28
7
8
9
10
11
12
13
14
15
16
17
18
19
20
27
26
25
24
23
22
21

Ref #	Part Number	Qty.	Description
1	PA060109	1	LH GRATE - BK
2	PA080083	1	D BURNER CAP XMATTE BLACKX
3	PA080107	1	DGRT-C BURNER CAP- BLACK
4	PA060110	1	RH GRATE - BK
5	PA080103	1	DGRT-A BURNER CAP- BLACK
6	PA080105	1	DGRT-B BURNER CAP- BLACK
7	PA080100	1	DGRT-B COMPLETE BURNER HEAD ASSEMBLY
8	PA080099	1	DGRT-ACOMPLETE BURNER HEAD ASSEMBLY
9	PB050071	1	B-BASE
10	PB050072	1	A-BASE
11	B21011410	1	BURNER PAN - SS, DGRT300
12	PB040199	1	NATURAL ORIFICE NO.56
12	PB040204	1	NO.67 LP
13	PB050067	4	JETHOLDER
14	PB040200	1	NO.57 ORIFICE - LP
14	PB040275	1	NO.70 ORIFICE - LP
15	014202-000	2	SUPPORT, ORIFICE HOLDER
16	003860-000	29	NO.10-18 X .500 FASTNR,SCR,HXWH,STL,ZPLT
17	014892-000	2	TRIM, SST,NO.3,SIDE TRIM,DESIGNER RNG,RH
18	015106-000	2	SIDE TRIM SUPPORT
19	013663-000	2	BURNER BOX, SIDE, RT
20	015052-000	1	PANEL, BNR BOX BOTTOM
21	PB070058	1	COOKTOP GASKET-(VGSU101)
22	PE070889	1	IRIS HARNESS - 30
23	000648-000	1	IRIS IGNITOR WIRE, BACK BURNER
24	006766-000	2	IRIS IGNITOR WIRE, BACK BURNER
25	000647-000	1	IRIS IGNITOR WIRE, FRONT BURNER
26	014199-000	1	COVER, REGULATOR BASE
27	PD030109	2	INSULATED CLAMP
28	013674-000	1	BACK, BURNER BOX
29	PB040195	1	NO. 50 ORIFICE FOR SEALED BURNER
29	PB040274	1	NO.58 LP
30	PD020005	8	NO.8 X 1/2 PH.PN.HD.SMS.
31	PB040197	1	NO. 53 ORIFICE FOR SEALED BURNER
31	PB040271	1	NO.60 LP
32	PB050069	1	D-BASE
NI	PB050070	1	C-BASE
NI	PA080102	1	DGRT-D COMPLETE BURNER HEAD ASSEMBLY
NI	PA080101	1	DGRT-C COMPLETE BURNER HEAD ASSEMBLY

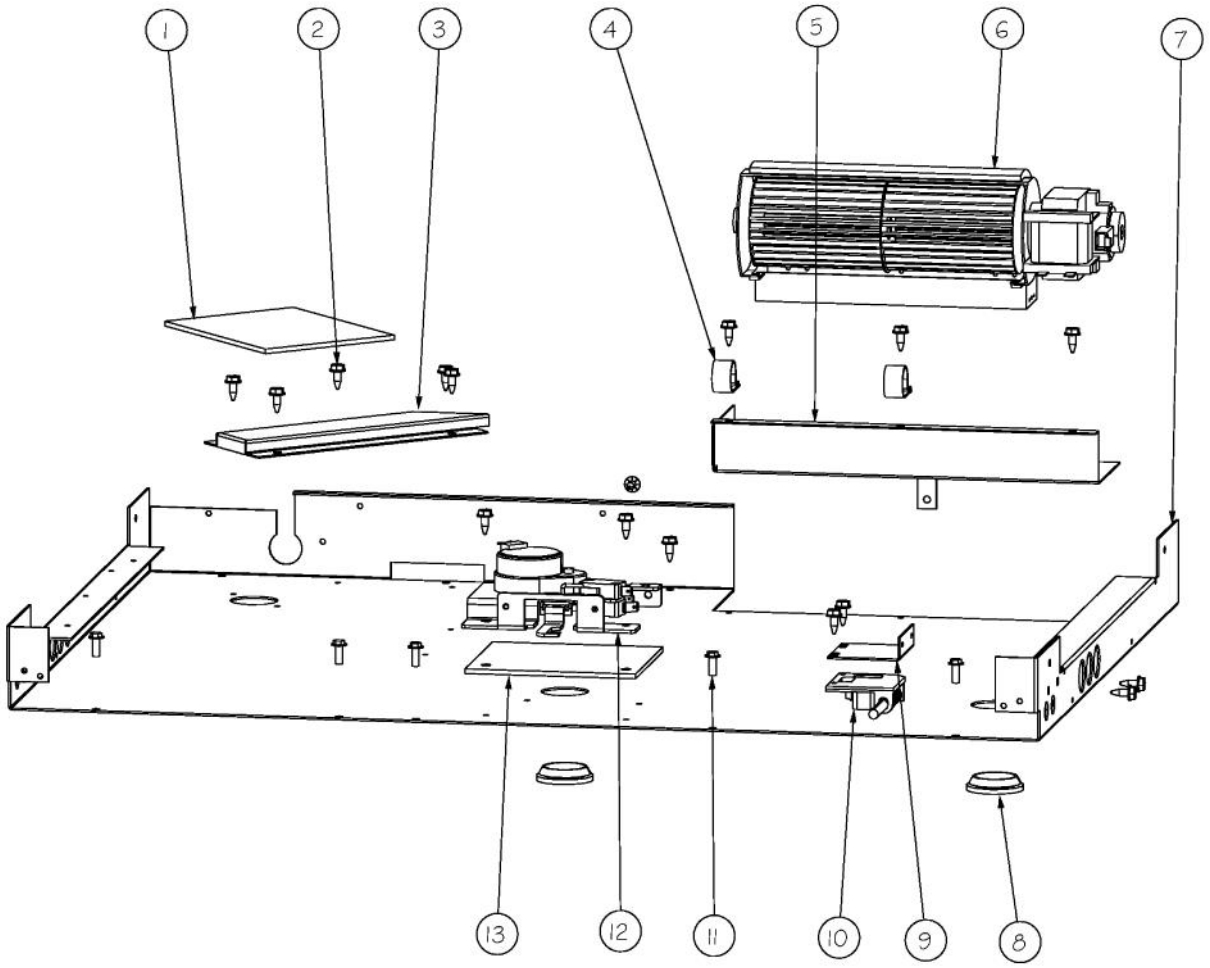
1
2
3
4
5
6
7
13
12
11
10
9
8

Ref #	Part Number	Qty.	Description
1	004285-000	1	INSULATION, FOIL-BACKED,4X5
2	003860-000	16	NO.10-18 X .500 FASTNR,SCR,HXWH,STL,ZPLT
3	003333-000	1	DUCT, FLUE
4	PD030109	2	INSULATED CLAMP
5	A2009659	1	BRACKET, FILLER, BLOWER
6	PE050250	1	PREMIUM BLOWER WITH HES
7	015615-000	1	BRACE, RNG, AIR CHANNEL
8	PB070079	2	SILICONE EXTRUSION (DGSU)
9	A20012649	1	DOOR SWITCH BRACKET
10	PE050208	1	DOOR SWITCH
11	PD020048	5	NO.10 X 1/2 TEK 410 SS SCREW
12	013250-000	1	LATCH,DOOR,ASM,240V,GRIDDLE LOCKOUT
13	013564-000	1	LOWER LATCH INSULATION

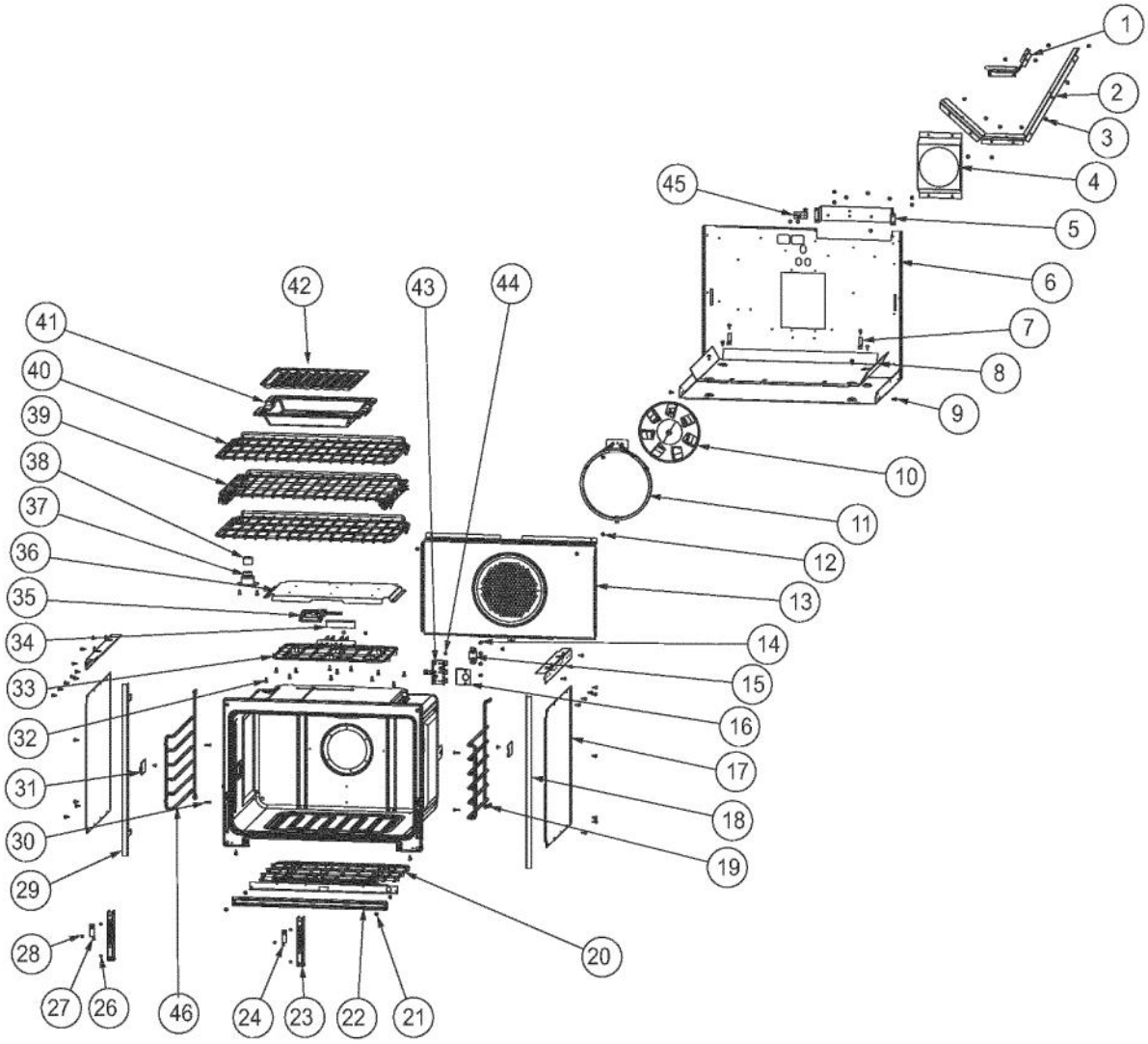
1
2
3
4
5
6
7
8
9
10
11
12
13
14
15
16
17
18
19
20
21
22
23
24
26
27
28
29
30
31
32
33
34
35
36
37
38
39
40
41
42
43
44
45
46

Ref #	Part Number	Qty.	Description
1	003356-000	1	DIVERTER, AIR
2	002941-000	1	BAFFLE, FAN, REAR
3	003860-000	55	NO.10-18 X .500 FASTNR,SCR,HXWH,STL,ZPLT
4	A2009697	1	BRACKET, CONVECTION INSULATION
5	004110-000	1	MOUNT,BLOWER
6	003244-000	1	OVEN BOTTOM, BACK WRAP
7	A2009696	2	HOLDER, BAKE ELEMENT
8	A2009612	1	ELEMENT, MTG TRAY
9	003801-000	2	SHOULDER SCREW, NO.10
10	015394-000	1	FAN, CNVN, ASM
11	PJ010047	1	CONVECTION ELEMENT
12	PD020048	25	NO.10 X 1/2 TEK 410 SS SCREW
13	014932-000	1	BAFFLE, CNVN, ASM, DSCD
14	PD020014	1	10X3/4 PH TR HD SMS
15	A1002457	1	POWER CORD MOUNTING STRAP (VDSC)
16	A2002195	1	POWER CORD MOUNTING BRKT (VDSC)
17	014137-000	2	WRAPPER, OVEN SIDE
18	003644-000	1	TRIM,FRONT,SIDE,STAINLESS
20	PJ010048	1	BAKE ELEMENT
21	PD020063	4	SCREW-NO.8(A) X 3/8PH WFR HD/BK OXID
22	014934-000	1	COVER, BAKE TRAY
23	031679-000	1	RECEPTACLE, HINGE
24	B21010915	1	HINGE CLIP ? RH
25	015362-000	1	SUPPORT, RACK, ASM, RH, BLUE
26	PD020062	4	NO.8-32 X 3/8 PHMS TYPE 1
27	B21010916	1	HINGE CLIP ? LH
28	PD020061	2	NO.8 X 3/4 FLAT HD TEK. SS.
29	005038-000	1	TRIM,FR,SIDE,L
30	PD020232	4	NO.8 X 3/4 PH PAN HEAD TEK SCREW (BLACK OXIDE)
31	014752-000	2	COVER, LT, BLUE PORCELAIN
32	A2009641	1	BRKT, TOP WRAPPER
33	PJ010049	1	BROIL ELEMENT
34	A20014044	1	BROIL ELEMENT SHIELD
35	005312-000	1	BJB SLIMLINE 40 W BULB
36	A20014021	1	REFLECTOR, BROIL
37	PM010014	1	SMOKE ELIMINATOR (VDSC)
38	PB020275	1	VENT TUBE
39	PB060108	1	SLIDING RACK
40	PB060107	2	30 OVEN RACK
41	014923-000	1	PAN, BROILER, BLUE PORCELAIN
42	014924-000	1	INSERT, BROILER PAN, BLUE PORCELAIN
43	PE070147	1	TERMINAL BLOCK
44	PD020010	1	10 X 3/8 GREEN GROUNDING SCREW
45	PE050206	1	RTD THERMOSTAT PROBE
46	015361-000	1	SUPPORT, RACK, ASM, LH, BLUE

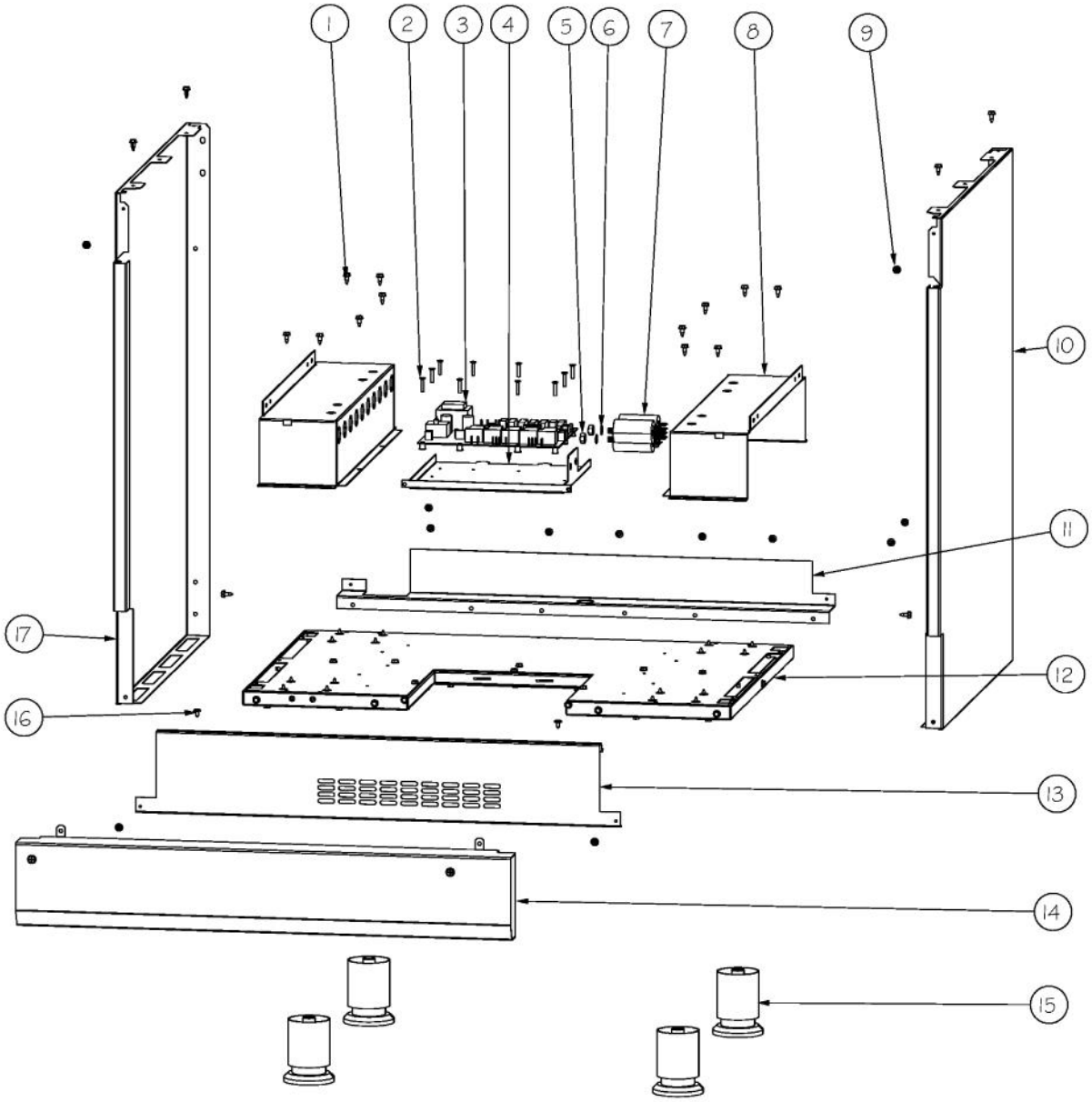
1
2
3
4
5
6
7
8
9
10
11
12
13
14
15
16
17

Ref #	Part Number	Qty.	Description
1	003860-000	26	NO.10-18 X .500 FASTNR,SCR,HXWH,STL,ZPLT
2	PD020043	10	NO.6-32 X .750 PH. CTRSK T(F)-VGSO166
3	000621-000	1	SUB TO 002406-000 - CONTROL BOARD (BEFORE 3/3/10)
3	014000-000	1	EOC4-CONTROL BOARD (ON OR AFTER 3/3/10)
NI	015201-000	1	LINEAR POWER SUPPLY (ON OR AFTER 3/3/10)
4	003050-000	1	CONTROL BOARD MOUNTING PLATE (BEFORE 3/3/10)
4	015096-000	1	PLATE, MTG, EOC4 CONTROL BOARD (ON OR AFTER 3/3/10)
5	PD030172	2	M8 X 1.25MM NUT
6	PD040164	2	5/16 INTERNAL TOOTH LOCK WASHER TYPE A
7	PE050247	2	EBM FAN MOTOR CAPACITOR
8	014241-000	2	SUPPORT, OVEN
9	003801-000	4	SHOULDER SCREW, NO.10
10	014764-000	1	PANEL, SIDE, DESIGNER, RH, SS
11	014240-000	1	LEDGE, BACK
12	003051-000	1	BASE LOWER PLATE
13	014246-000	1	GRILL, LOWER
14	013667-000	1	KICKPLATE
15	PC030031	4	ADJUSTABLE LEG
16	PD020032	1	SRW-8(A)X3/8PH.WFR HD 7/16DIAXNICL
17	014765-000	1	PANEL, SIDE, DESIGNER, LH, SS

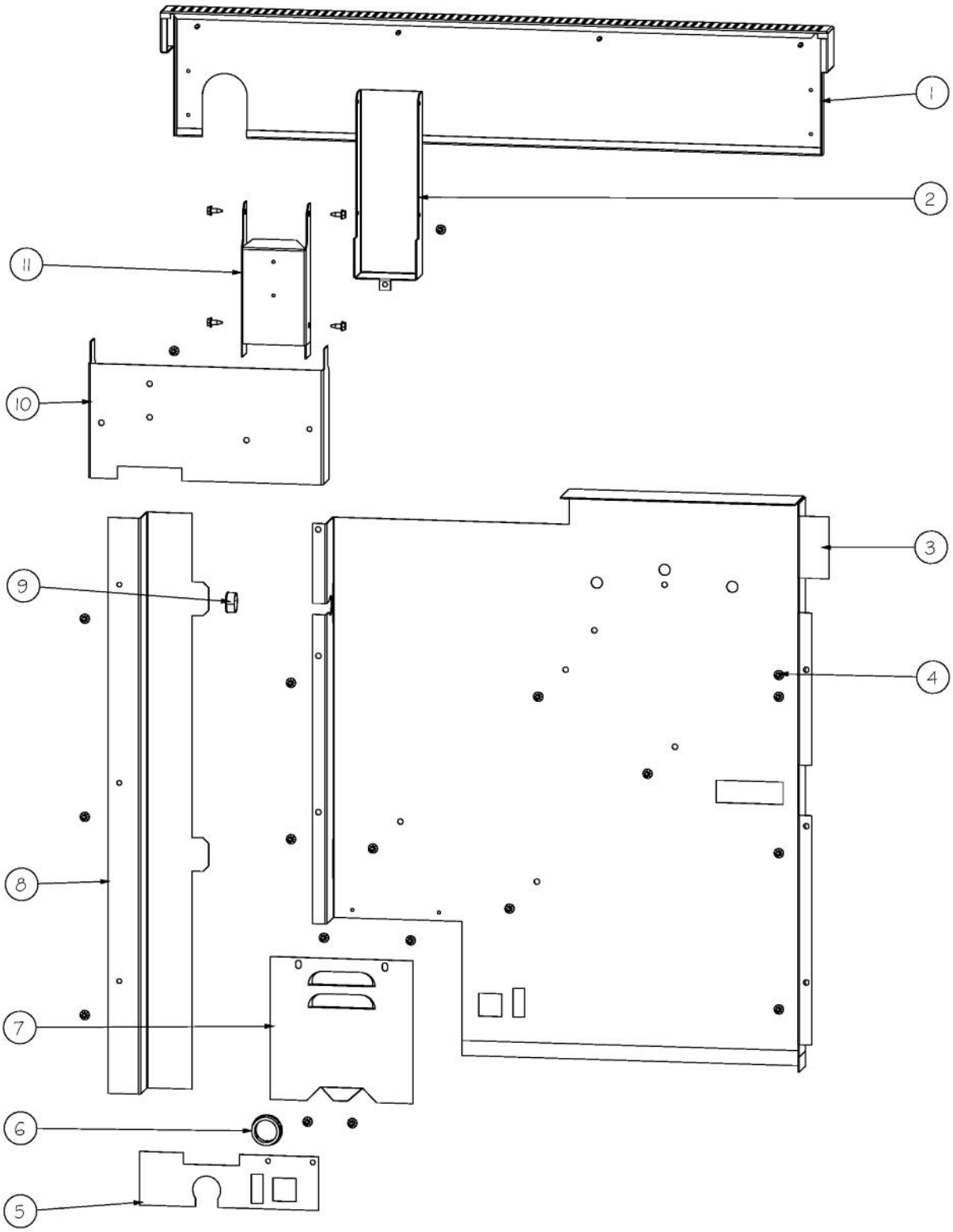
1
2
11
10
3
9
4
8
7
6
5

Ref #	Part Number	Qty.	Description
1	015931-000	1	ISLAND TRIM ASM, 30 DESIGNER
2	A20010101	1	FLUE, OUTSIDE SHELL
3	003272-000	1	COVER, REAR
4	003860-000	23	NO.10-18 X .500 FASTNR,SCR,HXWH,STL,ZPLT
5	003702-000	1	TEST CONNECTOR MOUNTING PLATE
6	PD040152	1	SNAP BUSHING
7	A2002454	1	BACK COVER ACCESS DOOR
8	015607-000	1	CHANNEL, WIRE, DSCD
9	PD040005	1	SNAP BUSHING - 7/8
10	014553-000	1	DUCT, AIR
11	014554-000	1	BOX, FLUE, FRONT

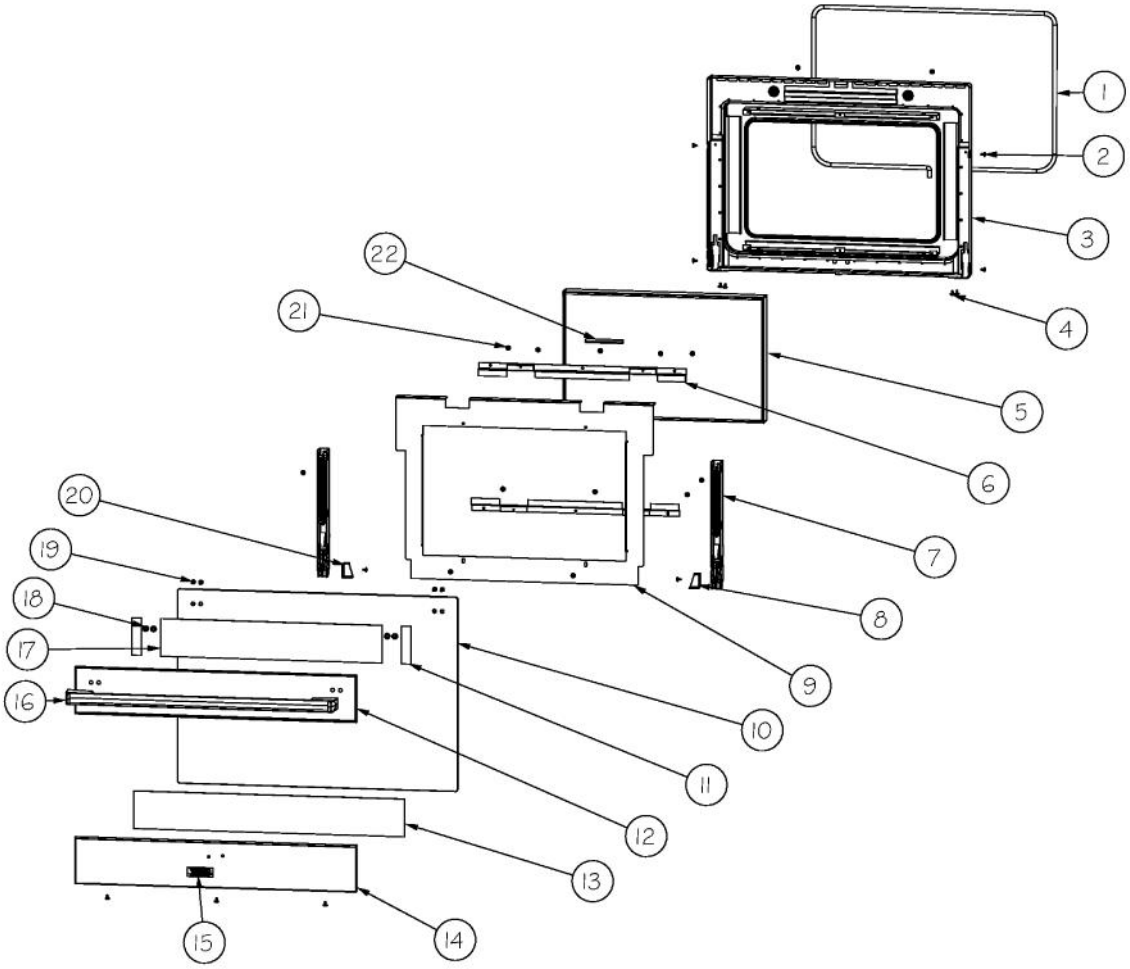
1
2
3
4
5
6
7
8
9
10
11
12
13
14
15
16
17
18
19
20
21
22

Ref #	Part Number	Qty.	Description
1	PB070246	1	30 DOOR GASKET
2	PD020063	12	SCREW-NO.8(A) X 3/8PH WFR HD/BK OXID
3	015413-000	1	LINER, DOOR ASM, BLUE
4	PD020032	5	SRW-8(A)X3/8PH.WFR HD 7/16DIAXNICL
5	PE060094	1	30 WINDOW PACK
6	004153-000	2	DOOR GLASS HOLDER BRACKET
7	002740-000	2	MANSFIELD HINGE, BLUE SPRING
8	006807-000	1	HINGE, BRKT, RH
9	004152-000	1	DOOR LINER INSULATION RETAINER, 30
10	013676-000	1	GLASS, DOOR SKIN, DESIGNER RANGE
11	019289-000	2	TAPE, ADHESIVE, UPPER DOOR, SIDE
12	019259-000	1	TRIM, DOOR, UPPER, 30 RANGE, SS
13	014194-000	1	3M VHB TAPE, 4991
14	013678-000	1	DOOR SKIN, BOTTOM, DESIGNER RANGE
15	013700-000	1	2.75 DESIGNER LOGO WITH PINS
16	009602-000	1	HANDLE, ASM
17	014195-000	1	3M VHB TAPE, 4991, UPPER DOOR
18	008964-000	4	GLASS TO DOOR SKIN
19	008974-000	4	SCREW 10 - 32 X 3/4 SLOT HEX WASHER
20	006808-000	1	HINGE, BRKT, LH
21	PD020002	10	10 X 1/2 PH.TR.HD.SMS.
22	000594-000	1	BLACK FIBERGLASS ROPE 3/8
NI	015579-000	1	OUTER DOOR ASM, DSCD130, SS
NI	019046-002	1	SKIN, DOOR, ASM, 30 DES BK
NI	019046-003	1	SKIN, DOOR, ASM, 30 DES BT
NI	019046-004	1	SKIN, DOOR, ASM, 30 DES SG
NI	019046-005	1	SKIN, DOOR, ASM, 30 DES GG
NI	019046-006	1	SKIN, DOOR, ASM, 30 DES WH
NI	019046-008	1	SKIN, DOOR, ASM, 30 DES BU
NI	019046-009	1	SKIN, DOOR, ASM, 30 DES LE
NI	019046-010	1	SKIN, DOOR, ASM, 30 DES MJ
NI	019046-012	1	SKIN, DOOR, ASM, 30 DES VB
NI	019046-013	1	SKIN, DOOR, ASM, 30 DES CB
NI	019046-015	1	SKIN, DOOR, ASM, 30 DES PL
NI	019046-016	1	SKIN, DOOR, ASM, 30 DES CH
NI	019046-017	1	SKIN, DOOR, ASM, 30 DES TP
NI	019046-018	1	SKIN, DOOR, ASM, 30 DES CW
NI	019046-019	1	SKIN, DOOR, ASM, 30 DES OG
NI	019046-020	1	SKIN, DOOR, ASM, 30 DES GM
NI	019046-021	1	SKIN, DOOR, ASM, 30 DES SA
NI	019046-022	1	SKIN, DOOR, ASM, 30 DES SE
NI	019046-023	1	SKIN, DOOR, ASM, 30 DES IB
NI	019046-024	1	SKIN, DOOR, ASM, 30 DES AR
NI	019046-025	1	SKIN, DOOR, ASM, 30 DES RR
NI	019046-026	1	SKIN, DOOR, ASM, 30 DES PM
NI	019046-027	1	SKIN, DOOR, ASM, 30 DES MS
NI	015581-000	1	DOOR ASM, DSCD130, SS
NI	019048-002	1	DOOR, ASM, 30 DES BK
NI	019048-003	1	DOOR, ASM, 30 DES BT
NI	019048-004	1	DOOR, ASM, 30 DES SG
NI	019048-005	1	DOOR, ASM, 30 DES GG
NI	019048-006	1	DOOR, ASM, 30 DES WH
NI	019048-008	1	DOOR, ASM, 30 DES BU
NI	019048-009	1	DOOR, ASM, 30 DES LE
NI	019048-010	1	DOOR, ASM, 30 DES MJ
NI	019048-012	1	DOOR, ASM, 30 DES VB
NI	019048-013	1	DOOR, ASM, 30 DES CB
NI	019048-015	1	DOOR, ASM, 30 DES PL
NI	019048-016	1	DOOR, ASM, 30 DES CH
NI	019048-017	1	DOOR, ASM, 30 DES TP

Ref #	Part Number	Qty.	Description
NI	019048-017	1	DOOR, ASM, 30 DES TP
NI	019048-018	1	DOOR, ASM, 30 DES CW
NI	019048-019	1	DOOR, ASM, 30 DES OG
NI	019048-020	1	DOOR, ASM, 30 DES GM
NI	019048-021	1	DOOR, ASM, 30 DES SA
NI	019048-022	1	DOOR, ASM, 30 DES SE
NI	019048-023	1	DOOR, ASM, 30 DES IB
NI	019048-024	1	DOOR, ASM, 30 DES AR
NI	019048-025	1	DOOR, ASM, 30 DES RR
NI	019048-026	1	DOOR, ASM, 30 DES PM
NI	019048-027	1	DOOR, ASM, 30 DES MS

No Image Available

Ref #	Part Number	Qty.	Description
1	000915-000	1	LIMIT JUMPER
2	PE070734	1	SINGLE OVEN HEADER
3	005292-000	1	MODEL 5 HEADER (BEFORE 3/3/10)
4	023022-000	1	MODEL 17 HEADER (ON OR AFTER 3/3/10)
5	015001-000	1	WIRE HARNESS, MAIN, DSCD (BEFORE 3/3/10)
6	021182-000	1	MAIN OVEN HARNESS (ON OR AFTER 3/3/10)
7	015866-000	1	WIRE HARNESS, CONTROL PANEL (BEFORE 3/3/10)
8	020019-000	1	HARNESS, WRG, CONTROL (ON OR AFTER 3/3/10)