This Owner's Manual is provided and hosted by Appliance Factory Parts.

Appliance Factory Parts
Experts in BBQ, Humidifier, & Appliance Parts
1-800-955-7075

LG AS-W123BRU1 Owner's Manual

Shop genuine replacement parts for LG AS-W123BRU1

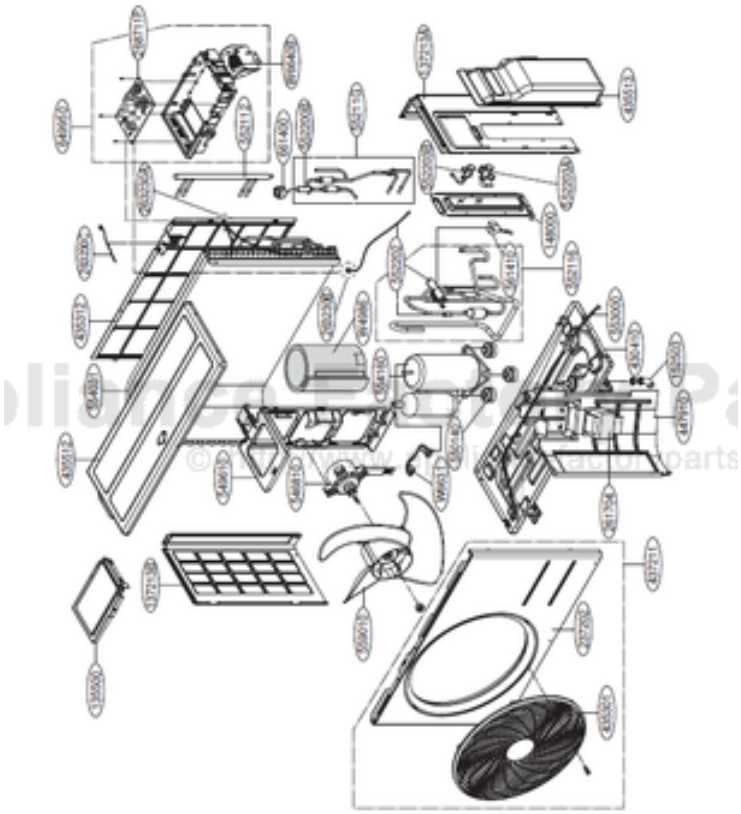

Find Your LG Air Conditioner Parts - Select From 2330 Models

-------- Manual continues below --------

Internal Use Only

http://biz.lgservice.com

Room Air Conditioner
SVC MANUAL(Exploded View)

MODEL : AS-W093BRU1(LAN090HSV/LAU090HSV)
AS-W123BRU1(LAN120HSV/LAU120HSV)

CAUTION

Before Servicing the unit, read the safety precautions in General SVC manual.
Only for authorized service personnel.

1. Specification

Models		Unit	AS-W093BRU1	AS-W123BRU1
Cooling Capacity		kW	0.89~2.64~3.70	0.89~3.3~4.30
		Btu/h.	3,070~9,000~12,620	3,070~11,200~14,660
Heating Capacity		kW	0.89~3.17~5.00	0.89~3.90~6.00
		Btu/h.	3,070~10,800~17,060	3,070~13,300~20,470
Power Input	Cooling	W	677	896
Running Current	Cooling/Heating	A	3.0 /3.7	4.2 / 4.9
Starting Current	Cooling/Heating	A	3.0 /3.7	4.2 / 4.9
EER		W/W	3.91	3.67
		Btu/h.W	13.3	12.5
SEER			20	20
HSPF			11	11
Power Supply		Ø / V / Hz	1/208-230/60	1/208-230/60
Power Factor		%	96	96
Air Flow Rate	Indoor,Max	m3/min(CFM)	12.0 (423)	12.0(423)
	Outdoor,Max	m3/min(CFM)	33(1,165)	33(1,165)
Moisture Removal		l/h.	1.1	1.3
Sound Level	Indoor,H/M/L	dB(A)±3	39 / 33 / 24 / 19	39 / 33 / 24 / 19
	Outdoor,Max	dB(A)±3	45	45
Refrigerant & Charge (at 7.5 m)		g(oz)	R410A, 1,000(35.3)	R410A, 1,000(35.3)
Additional Refrigerant charge		g/m(oz/ft)	20(0.22)	20(0.22)
Compressor	Type		Rotary	Rotary
	Model		5RS102XAA21	5RS102XAA21
	Motor Type		Brushless DC Motor	Brushless DC Motor
	Oil Type		PVE(FV50S)	PVE(FV50S)
	Oil Charge	cc	320	320
	O.L.P. name		-	-
Fan(Indoor)	Type		Cross Flow Fan	Cross Flow Fan
	Motor Output	W	20	20
Fan(Outdoor)	Type		Propeller	Propeller
	Motor Type		BLDC	BLDC
	Motor Output	W	43	43
Circuit Breaker*		A	15	15
Power Supply Cable		No.*mm2	3*1.5	3*1.5
Power and Transmission Cable No.*mm2		No.*mm2	4*1.0 (Including Earth)	4*1.0 (Including Earth)
Piping Connections	Liquid Side	mm(in)	6.35(1/4)	6.35(1/4)
	Gas Side	mm(in)	9.52(3/8)	9.52(3/8)
Drain Hose(O.D / I.D.)		mm(in)	21.5 / 16.0(0.85 / 0.63)	21.5 / 16.0(0.85 / 0.63)
Dimensions	Indoor (W*H*D)	mm	895*285*205	895*285*205
	inch		35.2*11.2*8.1	35.2*11.2*8.1
	Outdoor (W*H*D)	mm	770*545*288	770*545*288
	inch		30.3*21.5*11.3	30.3*21.5*11.3
Net Weight	Indoor	kg(lbs)	11(24.5)	11(24.5)
	Outdoor	kg(lbs)	35(77.2)	35(77.2)
Gross Weight	Indoor	kg(lbs)	13.5(29.7)	13.5(29.7)
	Outdoor	kg(lbs)	37(81.6)	37(81.6)
Operation Range	Cooling(Outdoor)	°C	-10~48(14~118.4)	-10~48(14~118.4)
	Heating(Outdoor)	°C	-10~24(14.0~75.2)	-10~24(14.0~75.2)
Piping Length (Min/Max)		m(ft)	2(6.6) / 20(65.6)	2(6.6) / 20(65.6)
Chargeless		m(ft)	12.5(41.0)	12.5(41.0)
Max. Elevation Difference		m(ft)	10(32.8)	10(32.8)
Tool Code(Chassis)	Indoor + Outdoor		SB_A + UL2	SB_A + UL2
Functions	Temperature Control		Thermistor	Thermistor
	Allergy free filter		O	O
	Plasma Filter		O	O
	Prefilter(washable/anti-fungus)		O	O
	Auto Clean		O	O
	CHAOS Wind(Auto Wind)		O	O
	Steps, Fan/Cool/Heat		5/6/5	5/6/5
	Airflow Direction Control(up& Down)		Auto	Auto
	Airflow Direction Control(left & right)		Auto	Auto
	Remote Controller Type		Wireless LCD	Wireless LCD
	Setting Temperature Range	Cooling	18°C ~ 30°C	18°C ~ 30°C
		Heating	16°C ~ 30°C	16°C ~ 30°C
	Auto Operation (Micom Control)		-	-
	Auto Changeover (Micom Control)		O	O
	Self Diagnosis		O	O
	Timer		24h, On/Off	24h, On/Off
	Sleep Operation		O	O
	Soft Dry Operation		O	O
	Restart Delay(minute)		3	3
	Deice Control(Defrost)		O	O
	Hot Start		O	O
	Jet Cool		O	O
	Low Ambient Operation		O	O
	Special Function		-	-

Note:

O : Applied, - : No relation

* For circuit breaker rating, please conform to local standards wherever necessary.

❊ Some of functions are slightly different depending upon models.

❊ The specification may be subject to change without notic for purpose of improvement.

Copyright ©2010 LG Electronics. Inc. All right reserved.
Only for training and service purposes

LGE Internal Use Only

2. Piping Diagrams

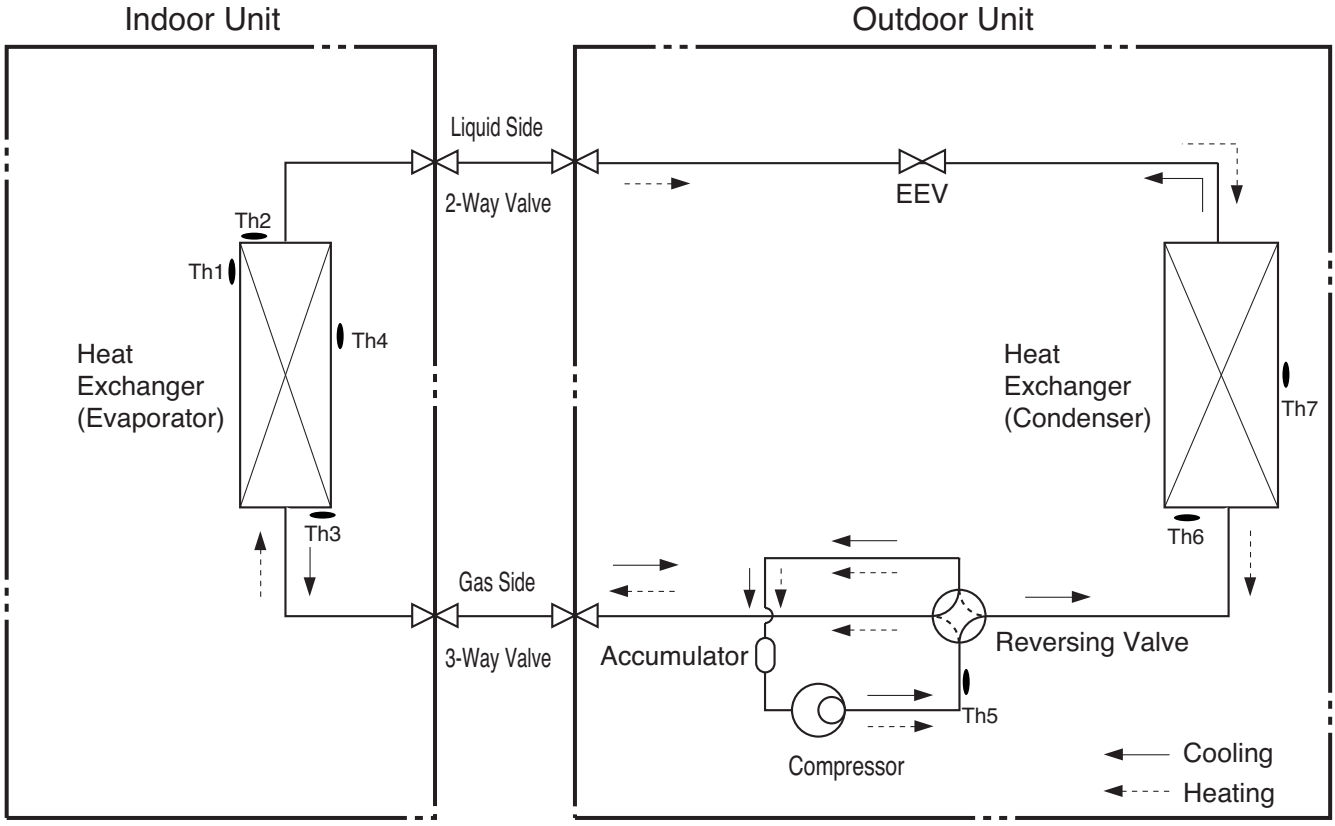

LOC.	Description	PCB Connector
Th1	Thermistor for sunction air temperature	CN-TH1(Indoor)
Th2	Thermistor for evaporator inlet temperature	
Th3	Thermistor for evaporator outlet temperature	CN-TH2(Indoor)
Th4	Thermistor for evaporator middle temperature	CN-TH3(Indoor)
Th5	Thermistor for discharge pipe temperature	CN-TH2(Outdoor)
Th6	Thermistor for condensing temperature	CN-TH1(Outdoor)
Th7	Thermistor for outdoor air temperature	

Copyright ©2010 LG Electronics. Inc. All right reserved.
Only for training and service purposes

LGE Internal Use Only

3. Wiring Diagrams

Indoor Unit

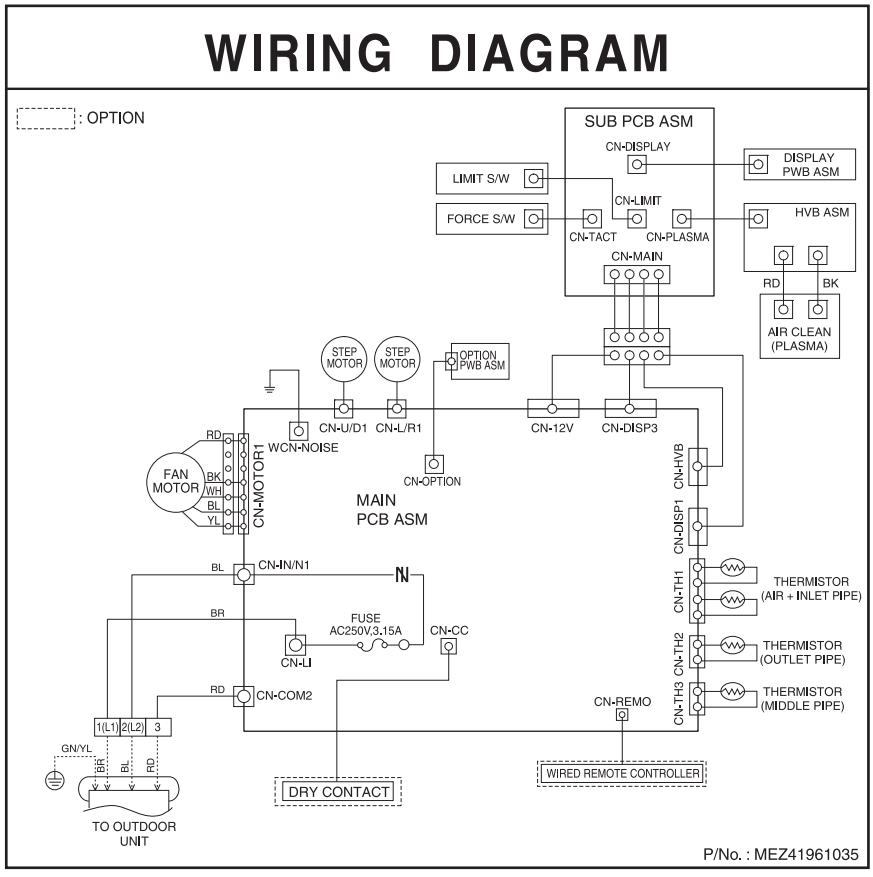

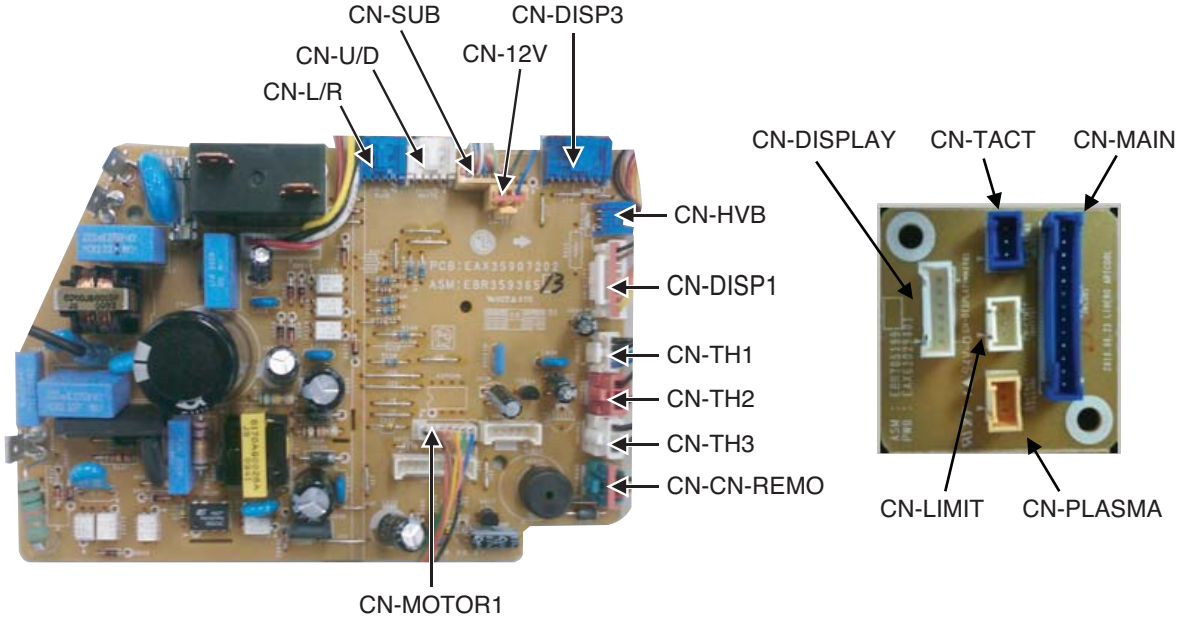

Copyright ©2010 LG Electronics. Inc. All right reserved.
Only for training and service purposes

LGE Internal Use Only

Outdoor Unit

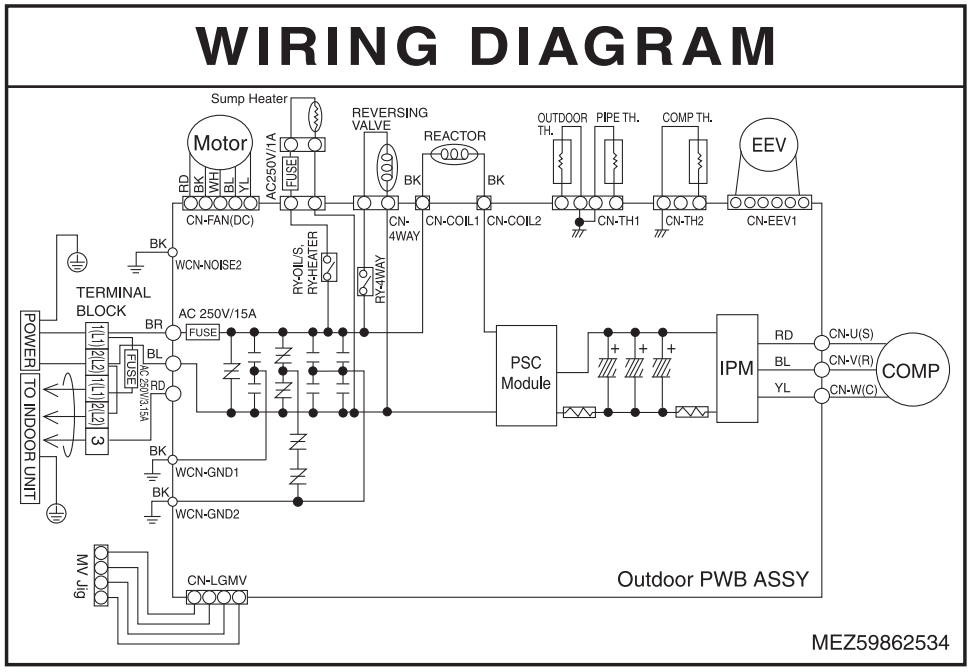

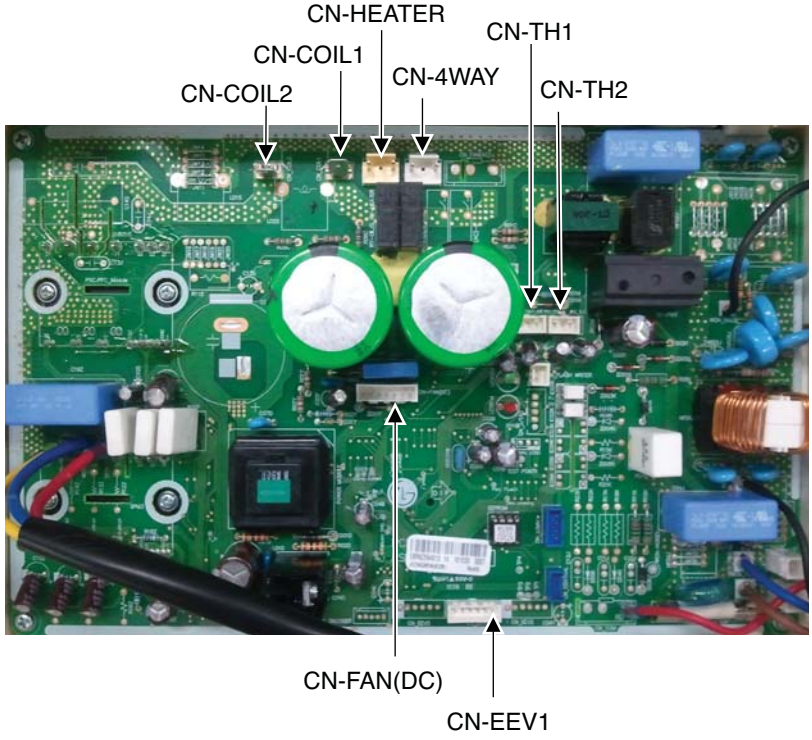

Copyright ©2010 LG Electronics. Inc. All right reserved.
Only for training and service purposes

LGE Internal Use Only

4. Exploded View

Model : AS-W093BRU1/AS-W123BRU1

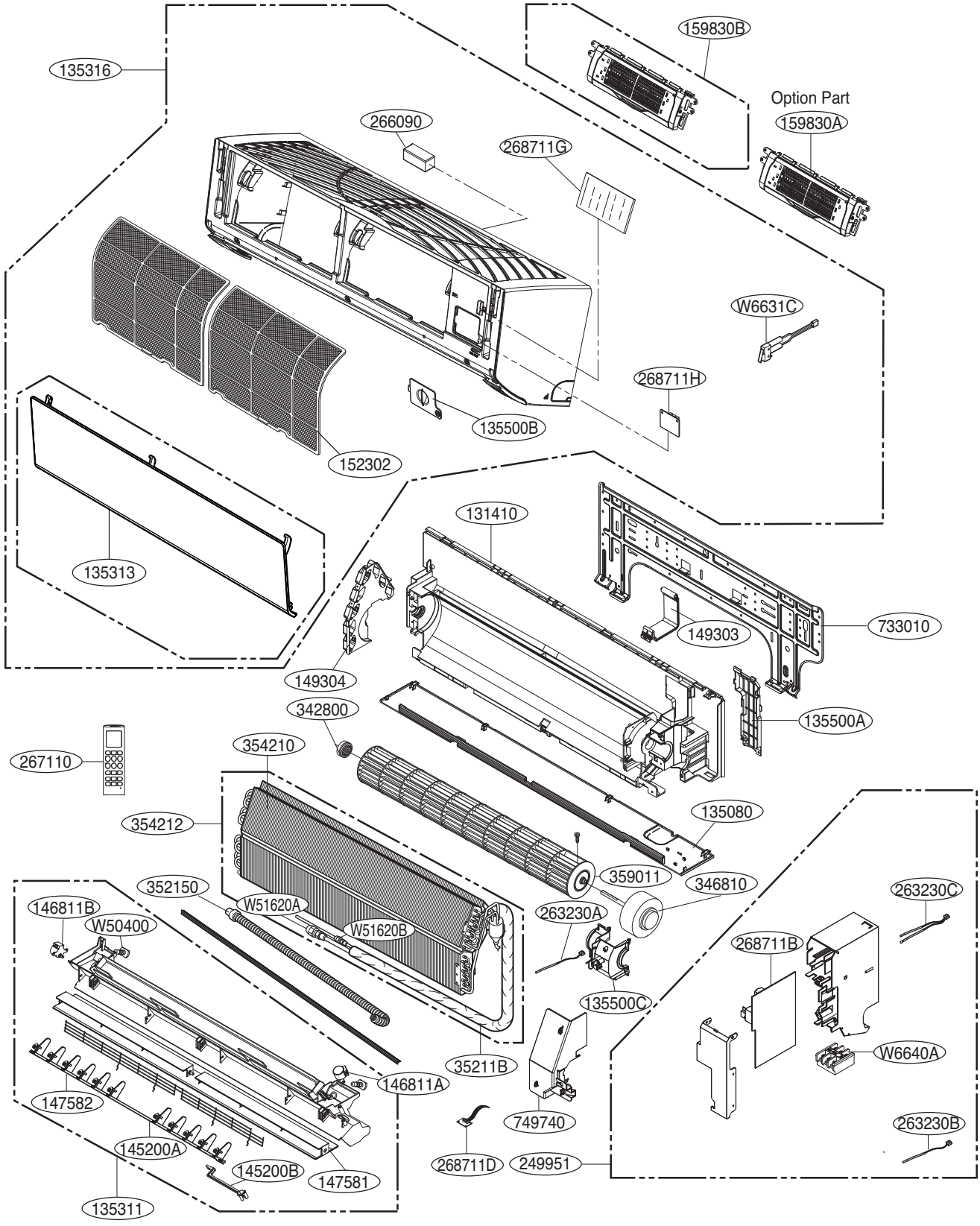

Copyright ©2010 LG Electronics. Inc. All right reserved.
Only for training and service purposes

LGE Internal Use Only

Outdoor Unit

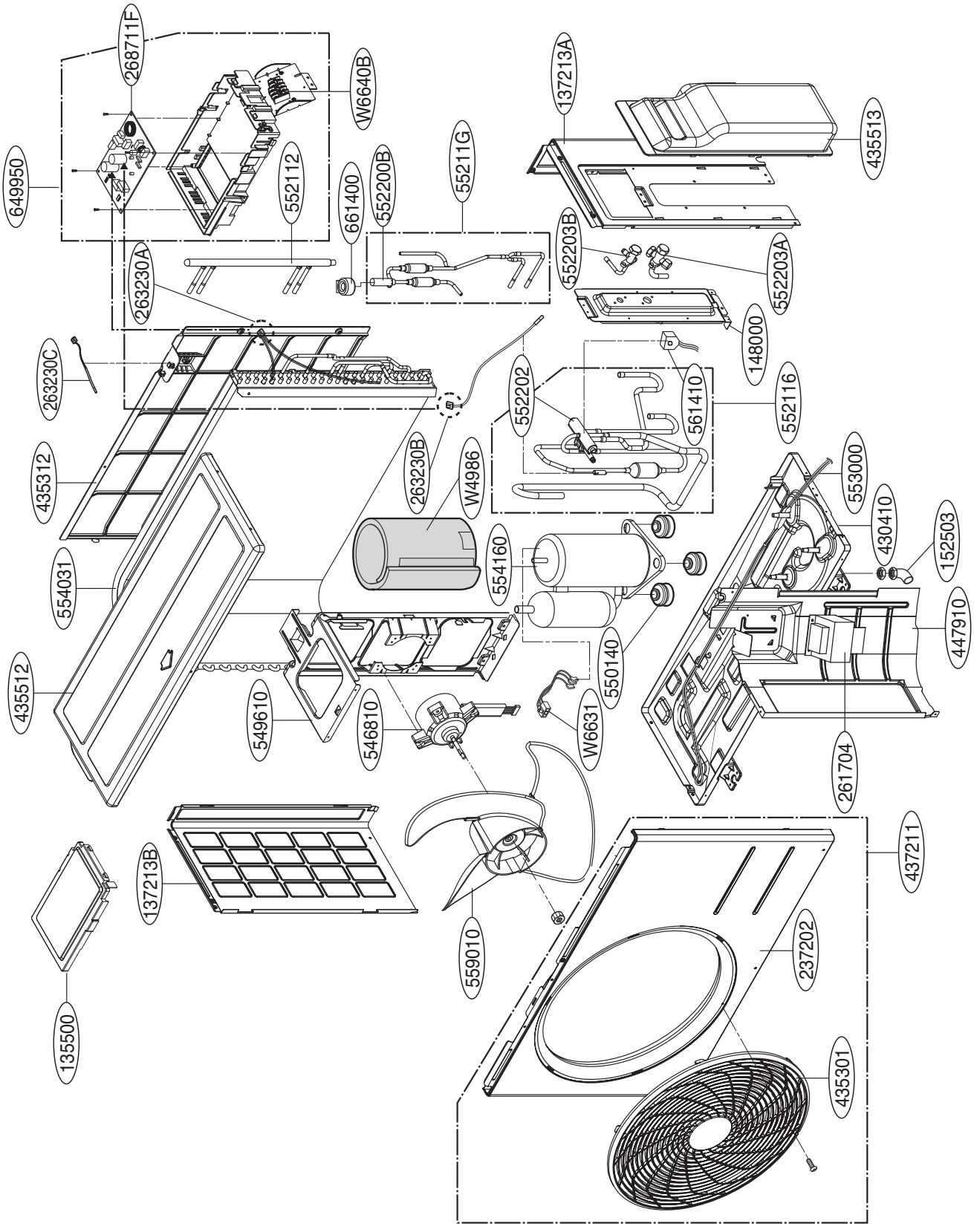

Copyright ©2010 LG Electronics. Inc. All right reserved.
Only for training and service purposes

LGE Internal Use Only

US	1. Please call the installing contractor of your product, as warranty service will be provided by them. 2. If you have service issues that have not been addressed by the contractor, please call 1-888-865-3026.
CANADA	Service call Number # : (888) LG Canada, (888) 542-2623

P/NO : MFL42201045

JANUARY, 2011