LANDMANN®

Kepler 300 Kettle

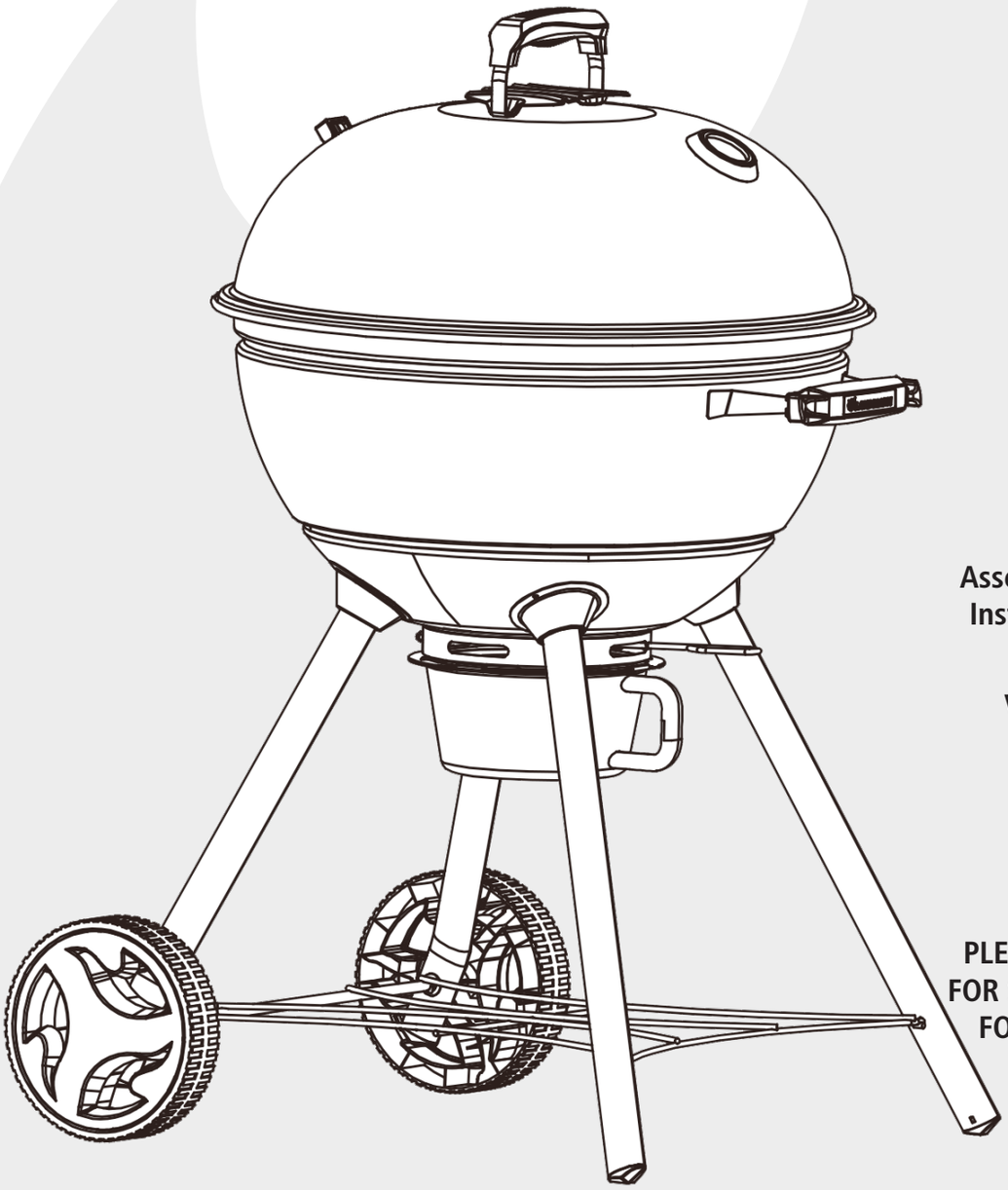

Kettle
Charcoal Grill

Assembly and Operating Instructions for Model: 525150

VER. 1, 12/12/2016

PLEASE READ ALL RULES FOR SAFE OPERATION AND FOOD SAFETY BEFORE USING.

READ FIRST!
RULES FOR KETTLE CHARCOAL GRILL SAFE OPERATION.

- **WARNING!** THE GRILL IS FOR OUTDOOR USE ONLY!
- **WARNING!** THIS GRILL GETS EXTREMELY HOT DURING USE! USE EXTREME CAUTION AROUND THE GRILL.
- **WARNING!** NEVER USE GASOLINE, ALCOHOL OR VOLATILE FLUIDS TO START OR RESTART FIRES. USE CHARCOAL LIGHTER FLUID ONLY TO START CHARCOAL. READ AND FOLLOW CHARCOAL LIGHTER FLUID MANUFACTURER INSTRUCTIONS CLOSELY.
- **WARNING!** DO NOT OPERATE GRILL WITHOUT ASH CATCHER IN PLACE, DO NOT OPEN ASH CATCHER DURING USE.
- DO NOT OVERLOAD THE GRILL OR USE MORE FUEL THAN THE SUGGESTED AMOUNT.
- KEEP THE GRILL A MINIMUM OF 10 FT. AWAY FROM BUILDINGS, STRUCTURES, ANY FLAMMABLE ITEMS AND VEHICLES DURING USE.
- NEVER USE THE GRILL UNDER COVERED PORCHES, AWNINGS, LOW HANGING TREE BRANCHES, TRELLIS, OR OVERHANGS OF ANY KIND.
- NEVER USE INSIDE ENCLOSED AREAS SUCH PATIOS, GARAGES, ENCLOSED ROOMS, BUILDINGS OR TENTS.
- ALWAYS USE THE GRILL ON A HARD, STABLE AND LEVEL SURFACE.
- THE GRILL IS FOR ADULT USE ONLY.
- DO NOT STORE LIGHTER FLUID OR OTHER FLAMMABLE LIQUIDS OR MATERIALS ON THE BOTTOM SHELF.
- KEEP CHILDREN AND PETS AWAY WHILE THE GRILL IS BEING USED.
- MITTENS OR GLOVES WILL BE NEEDED TO REMOVE THE LID AS SURFACES WILL BE HOT.
- MOST SURFACES OF THIS GRILL BECOME EXTREMELY HOT, USE CAUTION.
- DO NOT MOVE THE GRILL WHILE IT IS BEING USED.
- DO NOT LEAVE UNATTENDED AT ANY TIME WHILE IN USE.
- DO NOT USE IN WINDY CONDITIONS.
- USE CAUTION WHEN OPENING THE LID AS HOT STEAM OR A FLARE UP COULD CAUSE BURNS.
- BEFORE EACH USE, MAKE SURE THE GRILL IS IN GOOD WORKING CONDITION.
- FOR LONGER PRODUCT LIFE, KEEP THE CHARCOAL AND WOOD FIRES TO A RESPECTABLE SIZE, DO NOT OVERLOAD.
- DO NOT ALTER THE GRILL IN ANY WAY.
- DO NOT USE THE GRILL UNTIL IT IS COMPLETELY ASSEMBLED WITH ALL PARTS SECURELY TIGHTENED.
- USE CAUTION AFTER THE FIRE HAS BEEN EXTINGUISHED- SURFACES WILL REMAIN HOT FOR SOME TIME.
- BE SURE ALL COALS ARE COLD BEFORE DISPOSING.
- DISPOSE OF COALS PROPERLY.
- THE GRILL MUST BE COMPLETELY COOLED OFF AND ALL EMBERS MUST BE EXTINGUISHED BEFORE ANY COVER CAN BE USED.

! FOOD SAFETY

- RAW MEAT AND POULTRY HAS TO BE KEPT SEPARATE FROM READY TO EAT FOOD.
- USE CLEAN PLATTERS AND UTENSILS FOR HANDLING COOKED FOODS.
- COOK POULTRY AND MEATS THOROUGHLY TO KILL BACTERIA.
- USE INSTANT-READ THERMOMETER TO ENSURE PROPER INTERNAL FOOD TEMPERATURES.
- KEEP PREPARED FOOD AND LEFTOVERS REFRIGERATED.
- WASH HANDS, UTENSILS AND SURFACES WITH SOAP AND HOT WATER PRIOR TO AND AFTER HANDLING RAW MEAT AND POULTRY.

WARNING!

CARBON MONOXIDE HAZARD!
BURNING WOOD OR CHARCOAL PRODUCES CARBON MONOXIDE, WHICH HAS NO ODOR AND CAN CAUSE DEATH IF BURNED IN ENCLOSED AREAS. NEVER BURN WOOD OR CHARCOAL INSIDE HOMES, VEHICLES, TENTS OR ANY OTHER ENCLOSED AREAS.

WARNING!

Fuels used in wood or charchoal burning appliances, and the products of combustion of such fuels, contain chemicals known to the State of California to cause cancer and brith defects or other reproductive harm.

HARDWARE AND PART LISTING

A	B	C	D	E	F	G	H
ST4.2x13	M6x15	M5	M6	M8	SS Φ6.5	Mica Φ6.5	Φ10.5

1 LID HANDLE

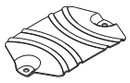

2 LID HANDLE HEAT SHIELD

3 LID AIR VENT
(Pre-assemble to lid)

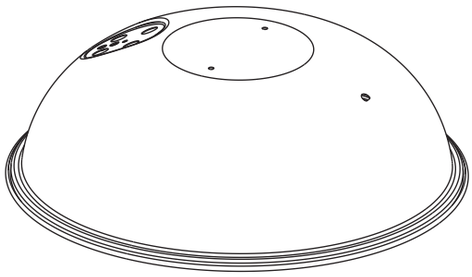

4 LID

5 LID HOOK

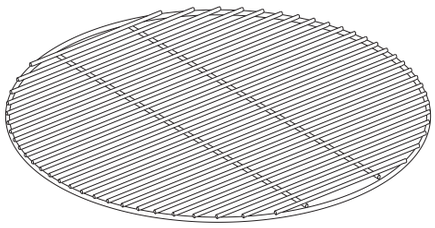

6 COOKING GRID

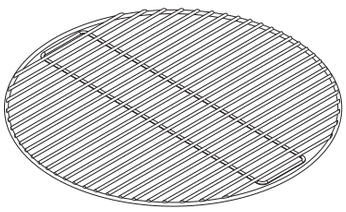

7 CHARCOAL GRID

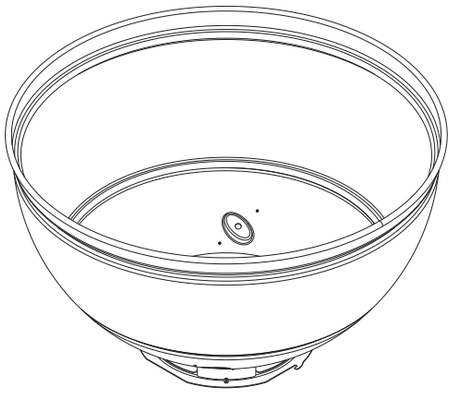

8 FIRE BOWL

9 ASH PAN

HARDWARE AND PART LISTING

x2

10 WHEEL LEGS

11 THERMOMETER

12 THERMOMETER BASE

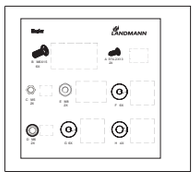

13 SCREW CARD

14 FIRE BOWL HANDLE

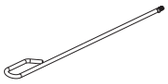

15 AIR VENT HANDLE

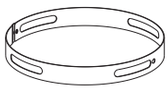

16 AIR VENT

x2

17 FRONT LEGS

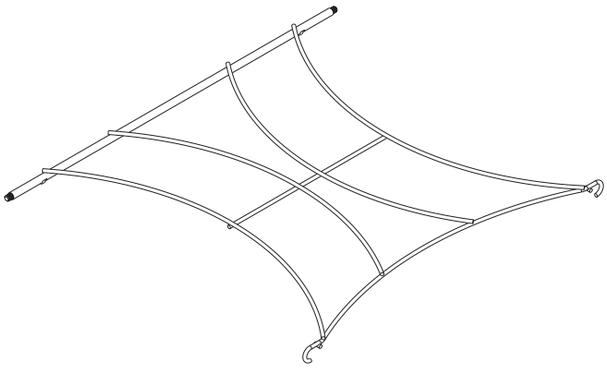

18 BOTTOM GRID

x2

19 WHEELS

x2

20 WHEEL COVERS

KETTLE ASSEMBLY INSTRUCTIONS

STEP 1

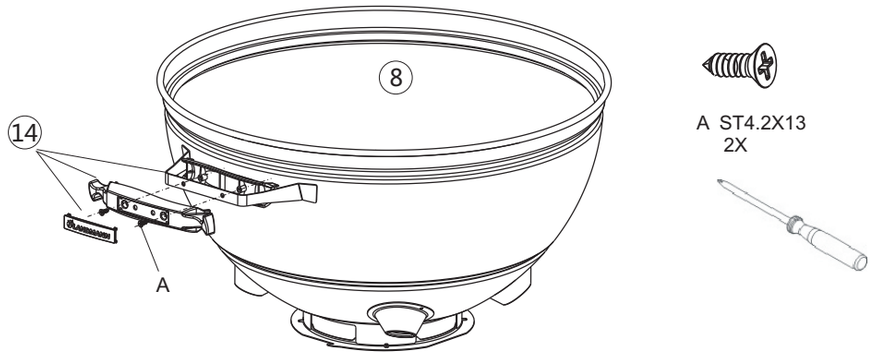

STEP 2

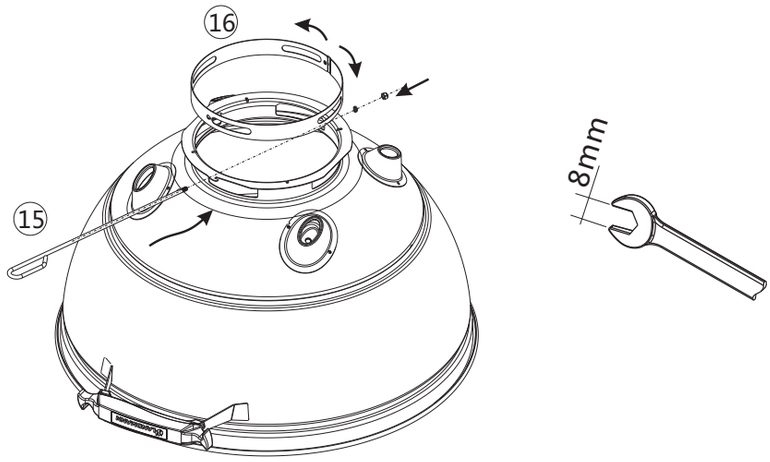

STEP 3

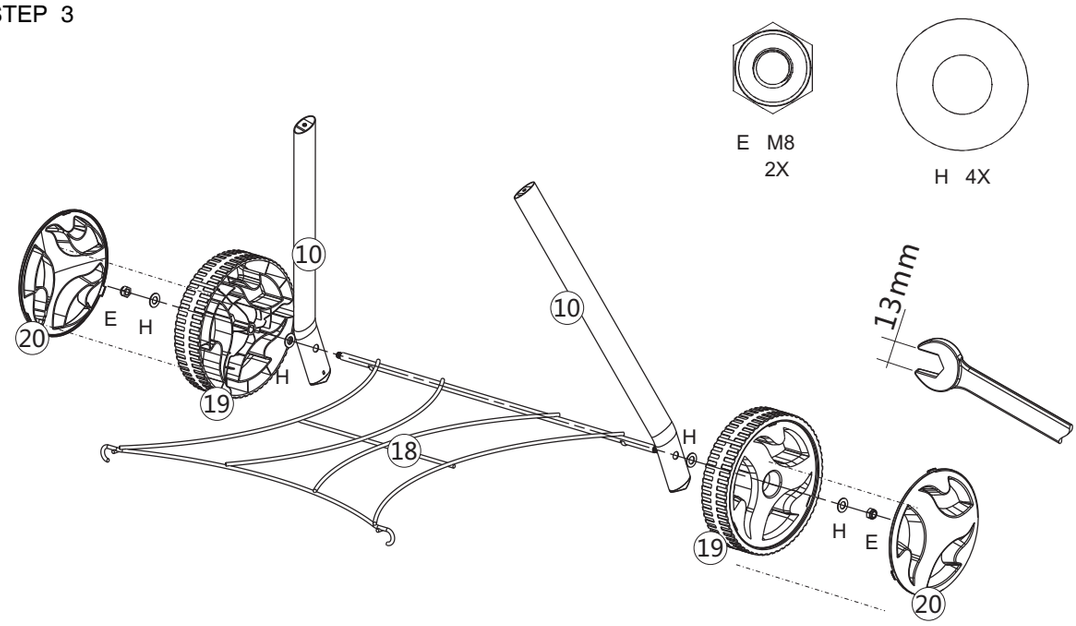

KETTLE ASSEMBLY INSTRUCTIONS

STEP 4 Install all leg screws loosely in steps 4 & 5. Once all 4 leg screws are installed then tighten.

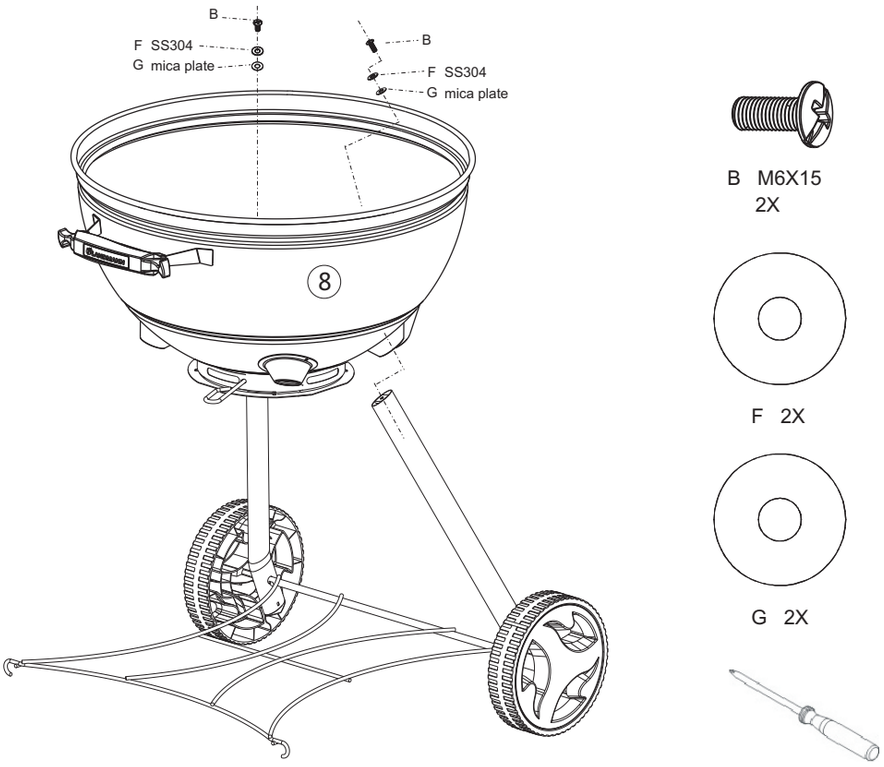

STEP 5

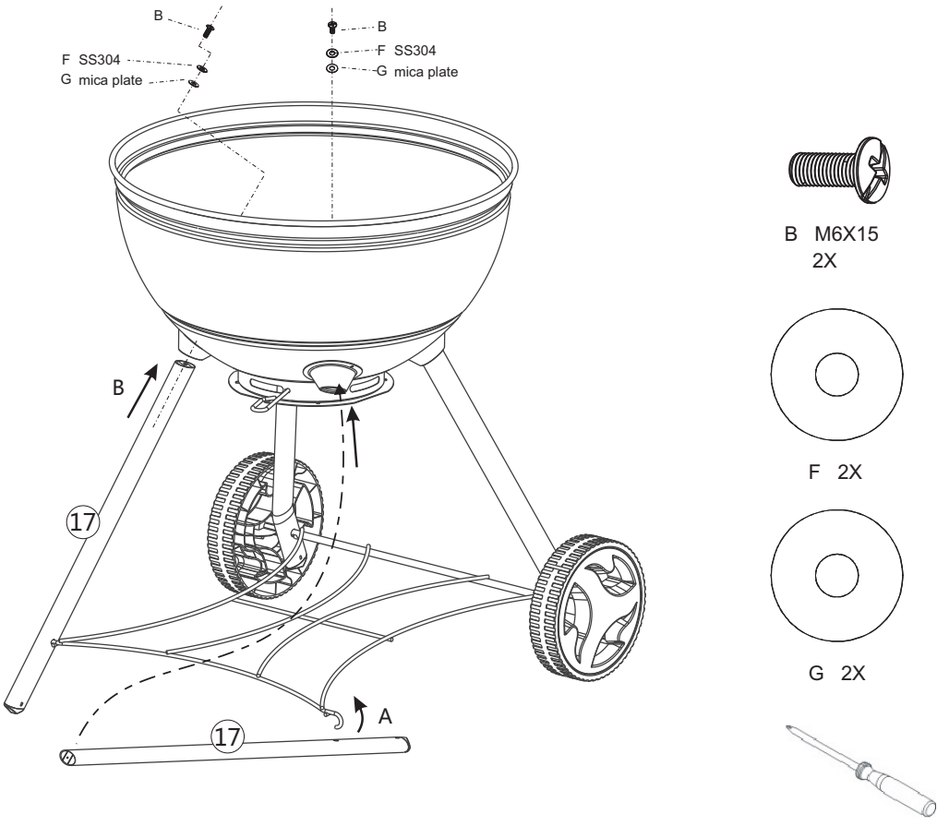

KETTLE ASSEMBLY INSTRUCTIONS

STEP 6

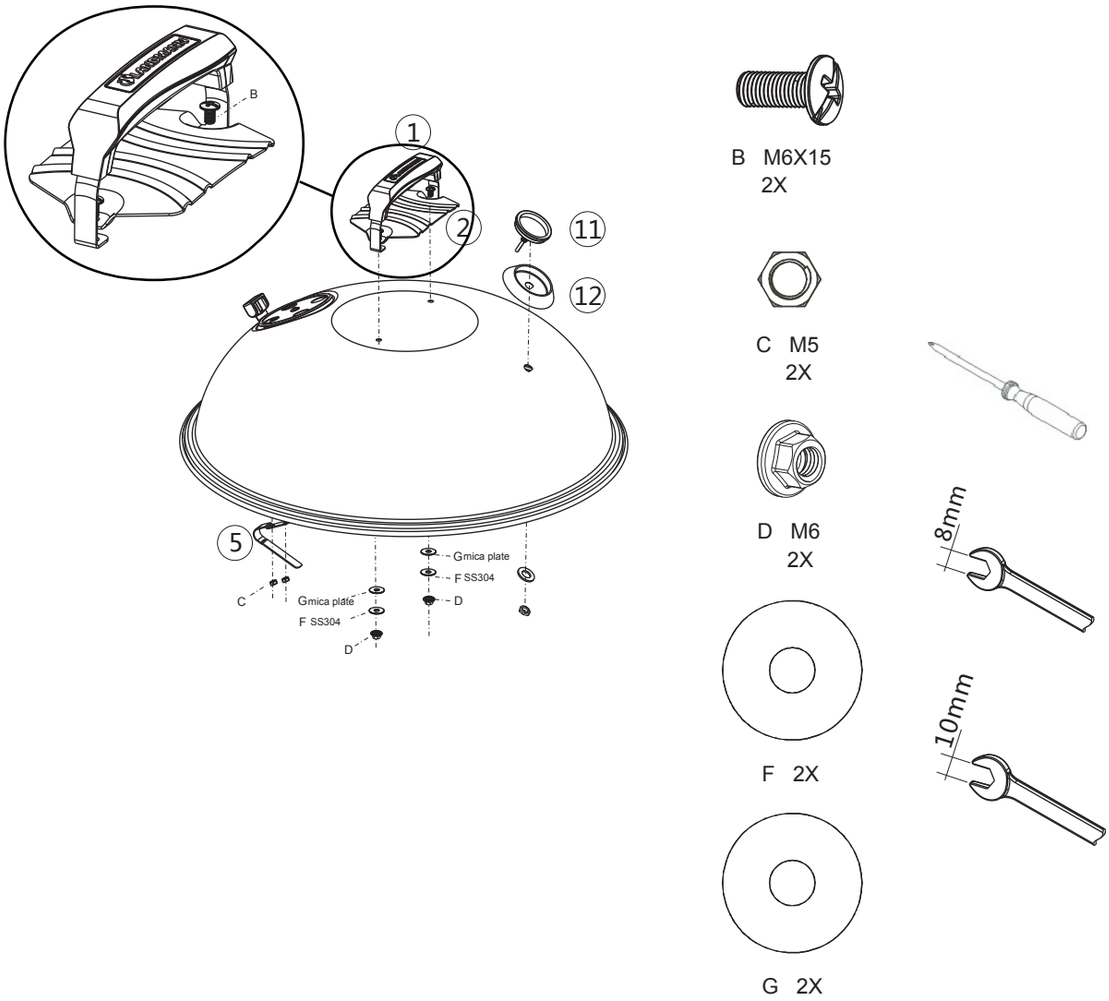

KETTLE ASSEMBLY INSTRUCTIONS

STEP 7

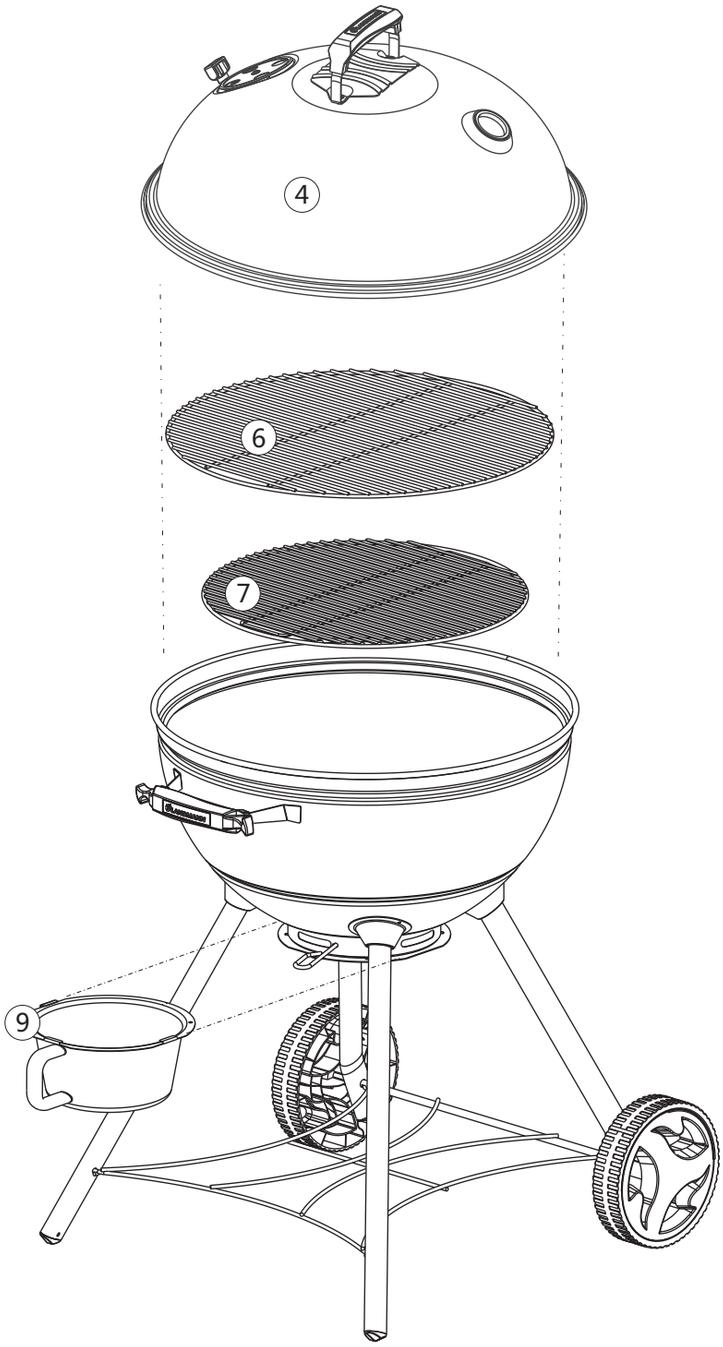

KETTLE ASSEMBLY INSTRUCTIONS

STEP 8

OPERATING INSTRUCTIONS FOR CHARCOAL GRILL

WARNING!

This grill becomes EXTREMELY hot! Use caution working around the grill. The handles will become warm to hot over extended use. Use mittens or oven gloves when removing the lid and cooking grate.

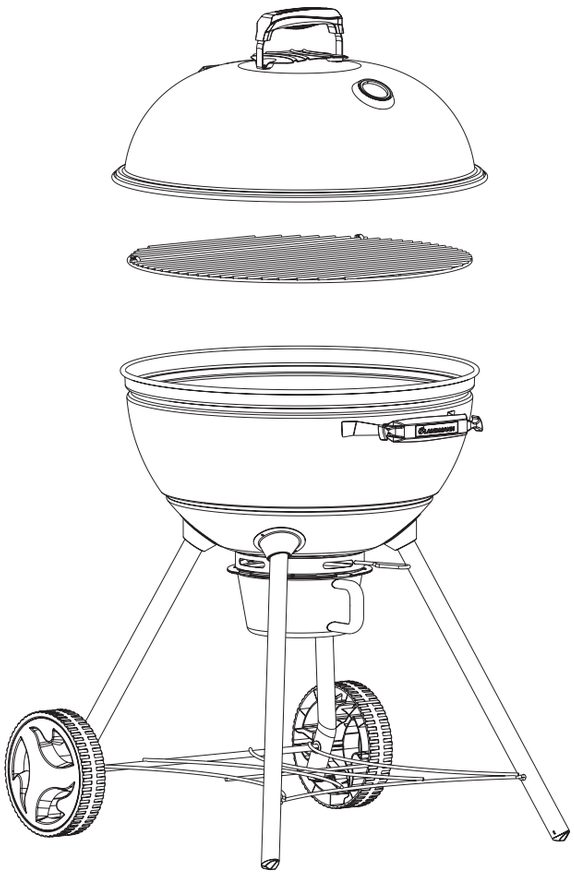

STEP 1: START THE CHARCOAL

Remove the lid. Pour desired amount of charcoal (3-5 lbs.) on the charcoal grate and light. Make sure ash catcher vent is open full. Leave cooking grate and lid off. The coals should be gray after about 30 minutes.

STEP 2: SETUP TO GRILL

Place the cooking grate on the grill. Place lid on grill and adjust lid vent as needed. When the charcoal has turned gray, the grill is ready.

CLEANUP

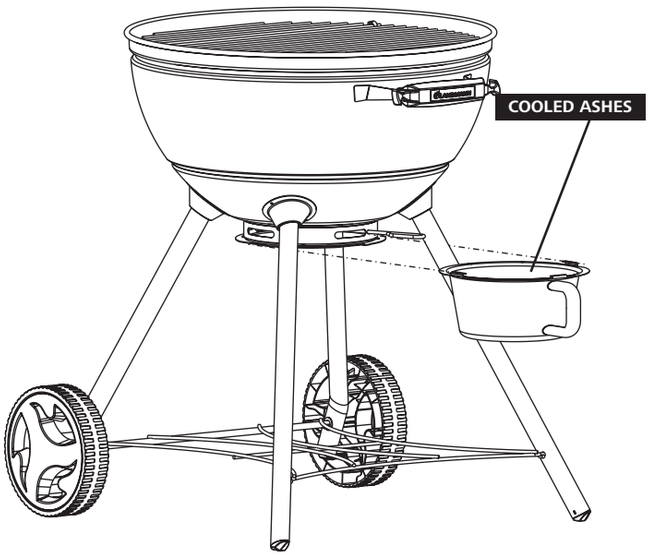

GRILL CLEANUP

Clean the cooking grate using a good quality grill brush. The buildup is easier to clean when its still hot. After the grill has cooled, tap and shake the grill lightly to get the ashes to fall into the ash catcher. If necessary remove the cooking grate and charcoal grate to push down any remaining ash or grill leftovers. Remove the ash catcher and dispose of cooled ashes in proper receptacle.

The chrome plated and enamel surfaces can be cleaned with soap and water. Clean only when the grill is cool to the touch.

FOOD TEMPERATURES

If you are unsure about when food is done, use this chart as a guide for measuring properly cooked meat temperatures.

Use a high quality meat thermometer with probe to measure the meat temperature. Push probe into the thickest part of the meat to get an accurate measurement. The temperature gauge on the grill measures the air temperature of the grill cooking chamber, not the food temperature.

Steaks & Roasts

Medium rare . . . . . .145˚F
Medium . . . . . .160˚F
Well done . . . . . .170˚F

Bison

Medium rare . . . . . .145˚F
Medium . . . . . .160˚F
Well done . . . . . .170˚F

Lamb

Medium rare . . . . . .145˚F
Medium . . . . . .160˚F
Well done . . . . . .170˚F

Ground Meats

Beef, Pork . . . . . .160˚F
Turkey . . . . . .165˚F

Pork

Medium . . . . . .160˚F
Well done . . . . . .170˚F

Poultry

Turkey . . . . . .165˚F
Chicken . . . . . .165˚F

Fish . . . . . .145˚F

Egg Dishes . . . . . .160˚F

If you still have questions,
please see the USDA contact info below.

USDA Meat and Poultry Hotline
1-888-674-6854
TTY: 1-800-256-7072
www.IsItDoneYet.gov

WARNING!

NEVER USE GASOLINE, ALCOHOL OR VOLATILE FLUIDS TO START OR RESTART FIRES.

HOT!

WARNING!

HOT SURFACES DURING USE! USE MITTENS OR GLOVES ON THESE PARTS.

WARNING!

DO NOT OPERATE GRILL WITHOUT ASH CATCHER IN PLACE. DO NOT OPEN ASH CATCHER DURING USE. KEEP ASH CATCHER CLOSED UNTIL ALL ASHES HAVE COOLED.

Congratulations on your purchase of the Kettle Charcoal Grill! At Landmann USA, we strive to provide you with an easy to use, easy to assemble product. However, in the unlikely event your package should have a missing or defective part, please contact us at:
customerservice@landmann-usa.com
-OR-
1-877-347-4557 M-F 8-5 ET.
Proof of purchase may be required.
Thank you!

ACCESSORIES
FOR KETTLE

COVER

MODEL
150140

This high quality cover keeps out the elements.

Please visit our website at:
www.landmann-usa.com
-OR-
Call customer service toll free at:
1-800-321-3473

HOT SURFACES DURING USE! HANDLES BECOME WARM TO HOT WITH EXETENDED USE.

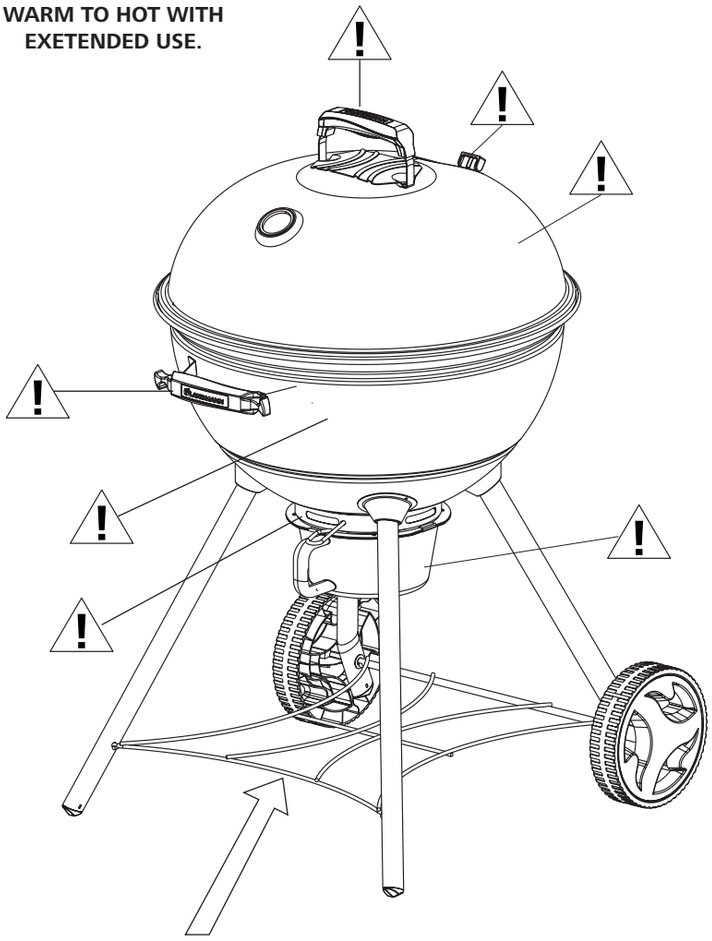

DO NOT STORE LIGHTER FLUID OR OTHER FLAMMABLE LIQUIDS OR MATERIALS ON THE STORAGE SHELF.

Landmann® Limited
Distributed by Landmann®USA
Fairburn, GA 30213
www.landmann-usa.com
Made in China
© 2014 Landmann® USA

REPLACEMENT PARTS

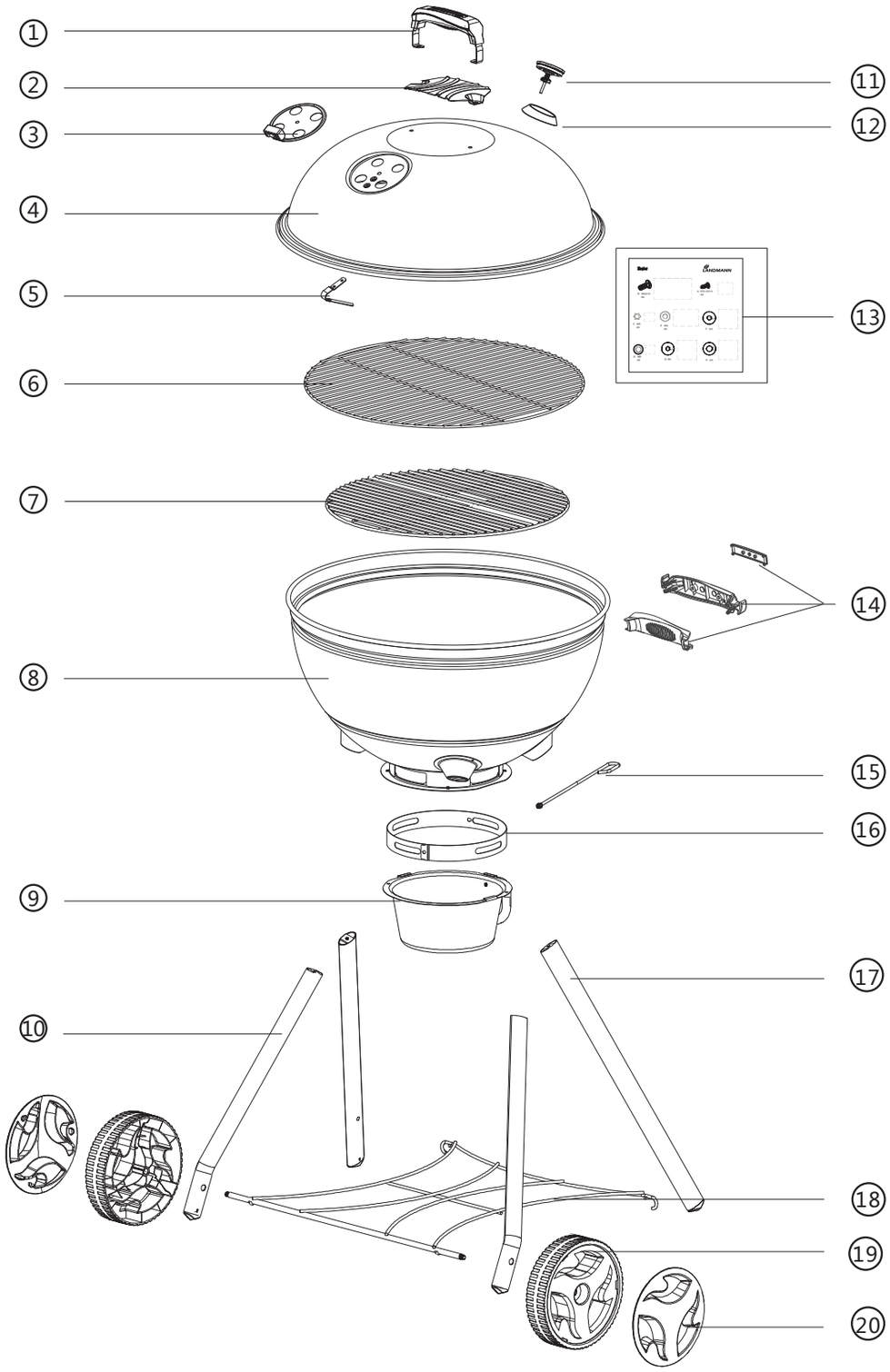

REPLACEMENT PARTS

No	Description	QTY.	Part #
1	Lid handle	1	KP0001
2	Lid handle heat shield	1	KP0002
3	Lid air vent	1	KP0003
4	Lid	1	KP0004
5	Lid hook	1	KP0005
6	Cooking grate	1	KP0024
7	Charcoal grid	1	KP0009
8	Firebowl	1	KP0010
9	Ash pan	1	KP0011
10	Wheel leg	2	KP0012
11	Thermometer	1	KP0013
12	Thermometer base	1	KP0014
13	Screw card	1	KP0015
14	Firebowl handle	1	KP0017
15	Air vent handle	1	KP0018
16	Air vent	1	KP0019
17	Front leg	2	KP0020
18	Bottom grid	1	KP0021
19	Wheel	2	KP0022
20	Wheel cover	2	KP0023

LANDMANN®
Kepler 300 Kettle

LIMITED WARRANTY

Landmann USA ("Landmann") warrants that this product shall be free of defects in material and workmanship to the original purchaser for 10 years on the lid and fire bowl, 1 year on all other parts. This limited warranty is made exclusively to the original customer presenting proof of purchase. This warranty is limited to non-commercial residential use only. Any returned goods must be shipped prepaid.

This warranty does not cover normal wear of parts or damage resulting from any of the following: negligence, abuse, misuse, alteration, improper installation, improper maintenance or failure to perform normal maintenance, or any use contrary to operating instructions. Furthermore, Landmann does not warrant in any way the finish of the product or cover damage or deterioration due to any normal or severe weather conditions or to any chemical exposure. These warranties do not cover surface scratches, rust or heat damage, which is considered to be normal wear. These warranties exclude liability for any indirect, incidental consequential damages or loss of property of any nature.

Do not return product or any parts to the store or ship to the manufacturer without written authorization.

Contact Customer Service at: 1-877-3GRILLS (1-877-347-4557) or grills@landmann-usa.com. Any returned products or parts must be returned postage prepaid.

These warranties are limited to non-commercial residential use only.

Product repair or replacement as provided under this warranty is your exclusive remedy. Landmann shall not be liable for any incidental or consequential damages or breach of any express or implied warranty on this product or any part thereof, except to the extent prohibited by applicable law. Some states do not allow the exclusion or limitation of incidental or consequential damages, or allow limitation on how long an implied warranty lasts, therefore, the above limitation or exclusion may not apply to you. This warranty gives you specific legal rights, and you may also have other rights, which vary, from state to state.