This Owner's Manual is provided and hosted by Appliance Factory Parts.

Appliance Factory Parts
Experts in BBQ, Humidifier, & Appliance Parts
1-800-955-7075

# Napoleon B42NTRE Owner's Manual

Shop genuine replacement parts for Napoleon B42NTRE

ASCENT™ 42

*Direct Vent, Electronic Ignition*

Natural Gas

Find Your Napoleon Fireplace Parts - Select From 171 Models

-------- Manual continues below --------

# ASCENT™ 42 DIRECT VENT GAS FIREPLACE

## Specifications

| Model | BTU | Width | | Height | | Depth | | Viewing Area |
|---|---|---|---|---|---|---|---|---|
| | | Actual | Framing | Actual | Framing | Actual | Framing | |
| B42TR | 22,000 | 42 | 42 1/2 | 34 5/8 | 35 | 18 5/16 | 18 9/16 | 23 11/16 X 37 11/16 |

## Front Options

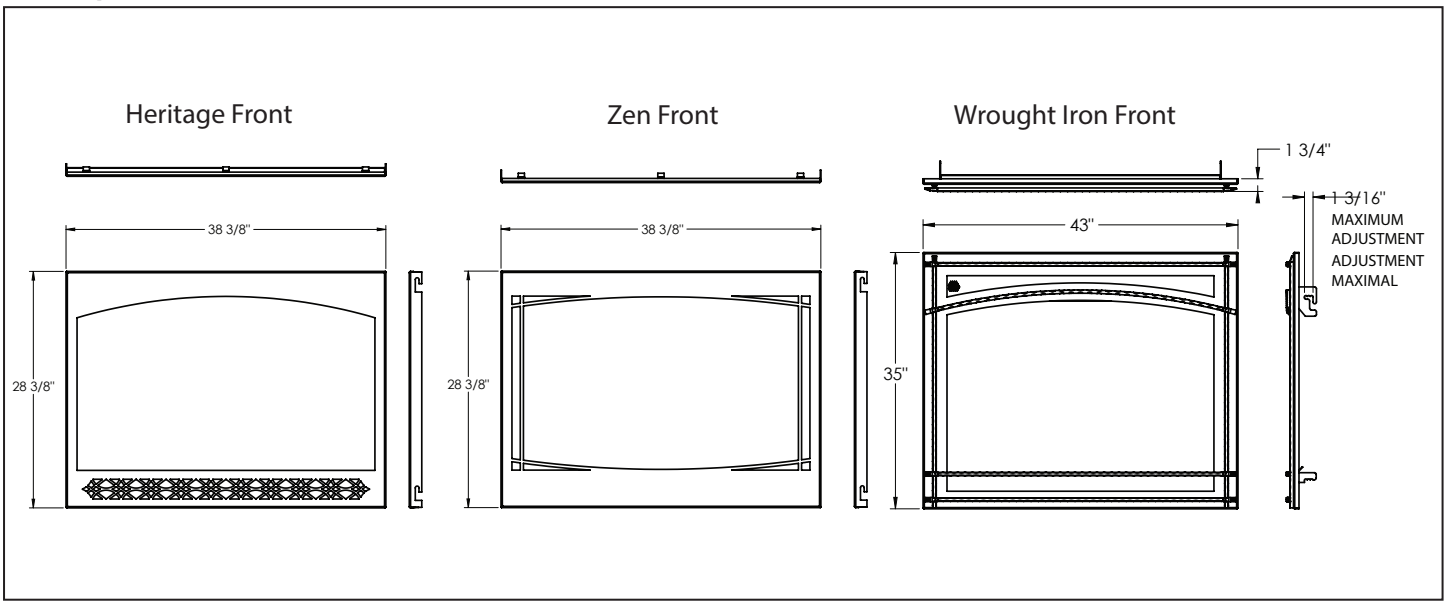


## Rough Framing

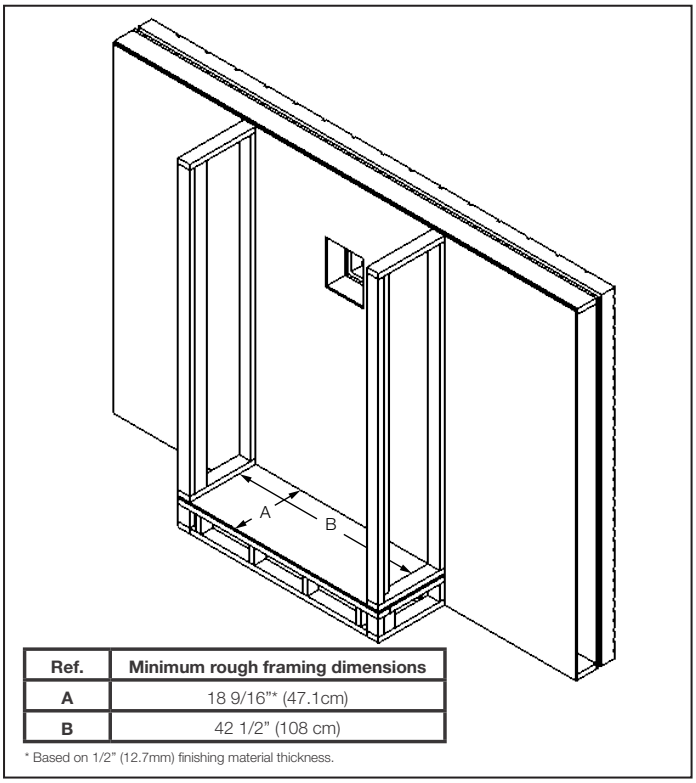


| Ref. | Minimum rough framing dimensions |
|---|---|
| A | 18 9/16"* (47.1cm) |
| B | 42 1/2" (108 cm) |

* Based on 1/2" (12.7mm) finishing material thickness.

## Finish Framing

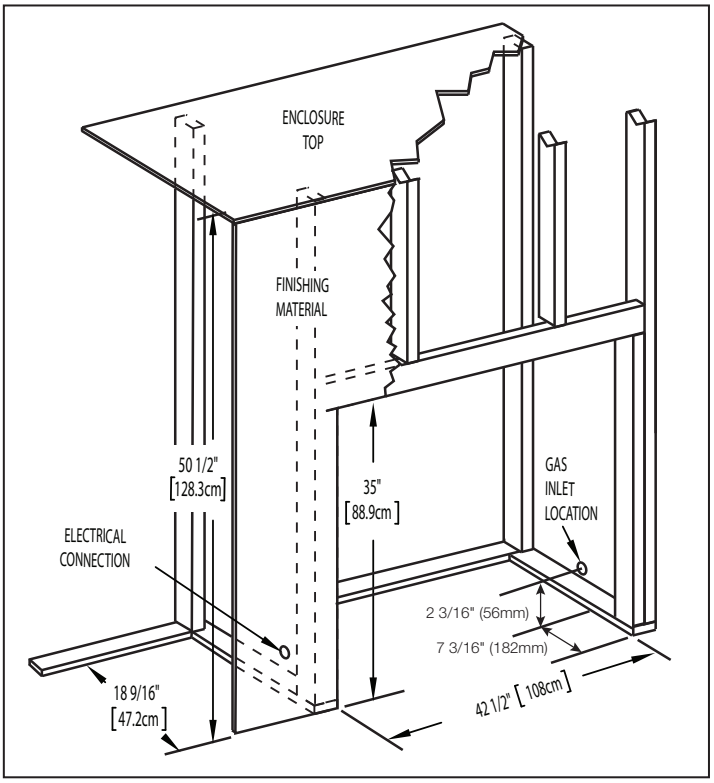


W415-1889 / 10.26.18

24 Napoleon Road, Barrie, Ontario, Canada L4M 0G8 • 214 Bayview Drive, Barrie, Ontario, Canada L4N 4Y8
Fireplaces, Heating and Cooling: 705-721-1212 • Grills: 705 726-4278 • napoleonproducts.com

# ASCENT™ 42 DIRECT VENT GAS FIREPLACE

**Product information provided is not complete and is subject to change without notice. Please consult the installation manual for the most up to date installation information.**

## Dimensions

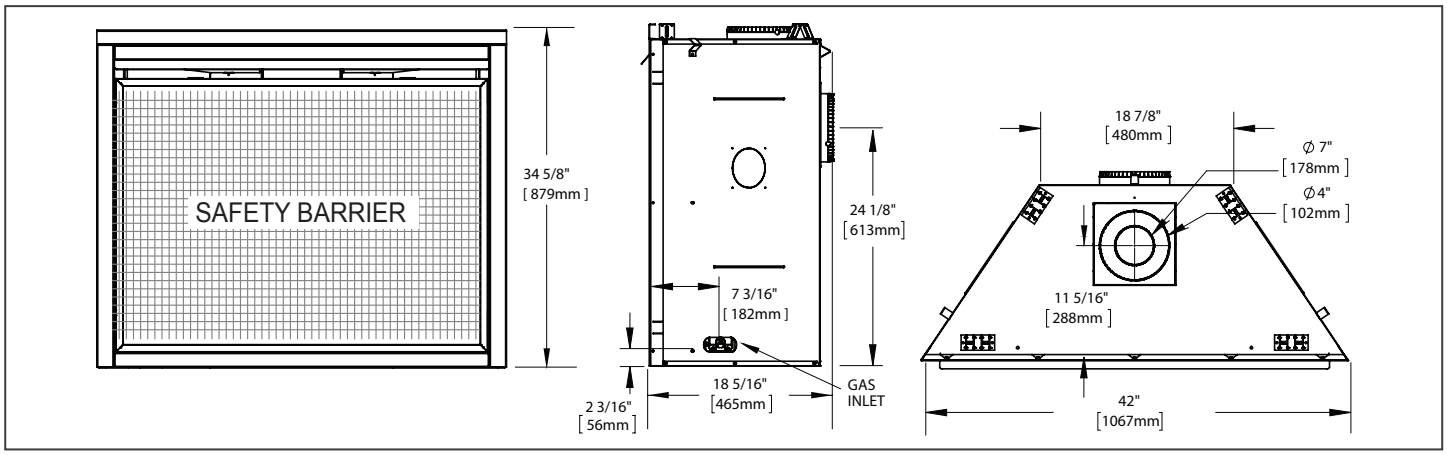


## Wall Penetration

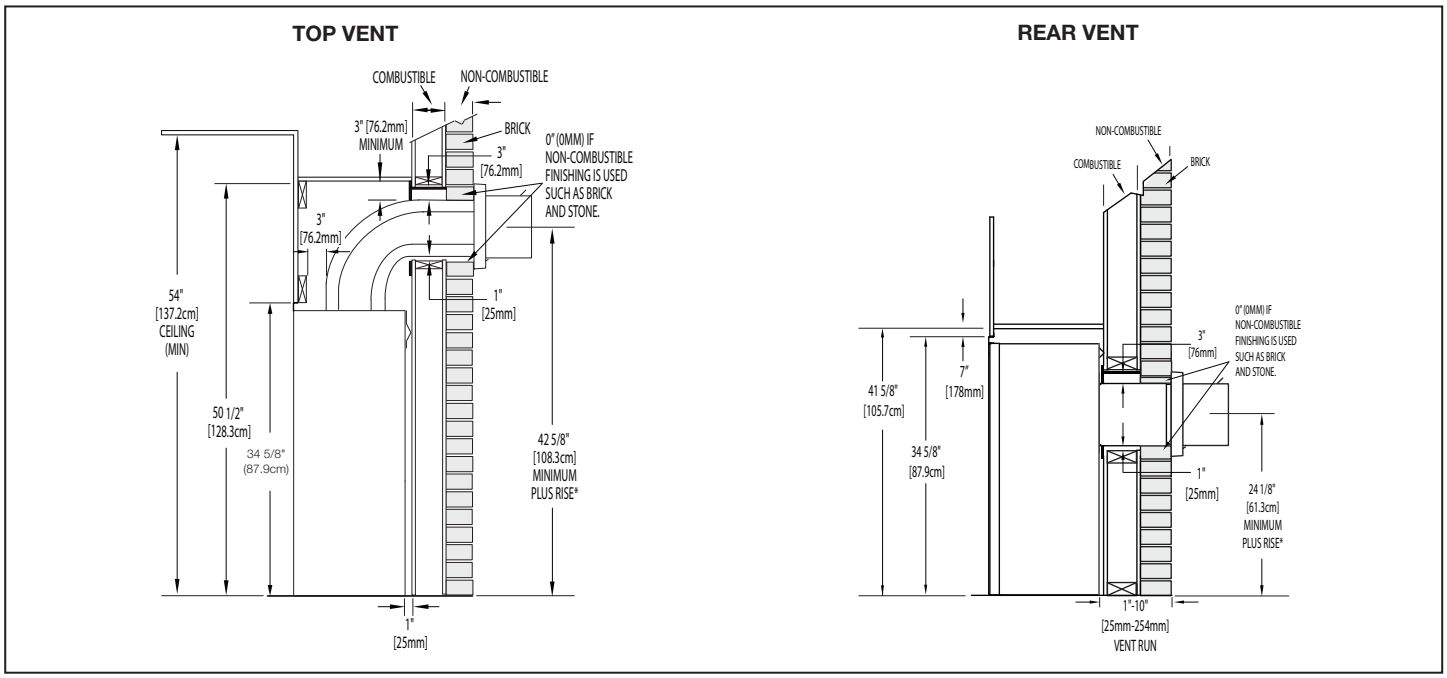


## Combustible Mantel Clearances

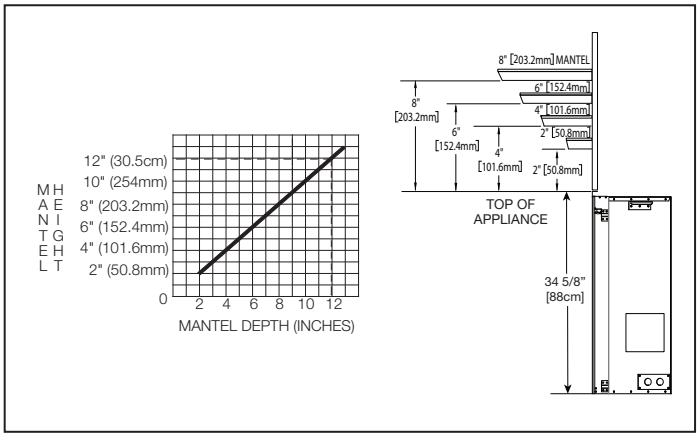


## Appliance Location

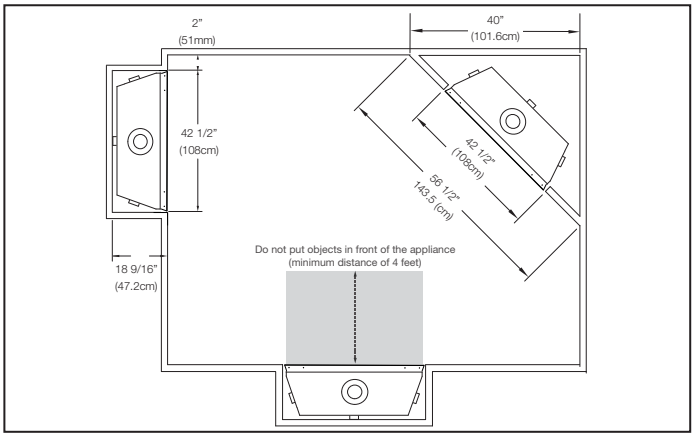


W415-1889 / 10.26.18


24 Napoleon Road, Barrie, Ontario, Canada L4M 0G8 • 214 Bayview Drive, Barrie, Ontario, Canada L4N 4Y8
Fireplaces, Heating and Cooling: 705-721-1212 • Grills: 705 726-4278 • napoleonproducts.com

# FOYER À GAZ VENTILÉ DIRECTE ASCENT[MD] 42

## Spécifications

| Modèle | BTU | Largeur | | Hauteur | | Profondeur | | Dimensions de Vision |
|---|---|---|---|---|---|---|---|---|
| | | Réel | Ossature | Réel | Ossature | Réel | Ossature | |
| B42TR | 22,000 | 42 | 42 1/2 | 34 5/8 | 35 | 18 5/16 | 18 9/16 | 23 11/16 X 37 11/16 |

## Façades Décoratives

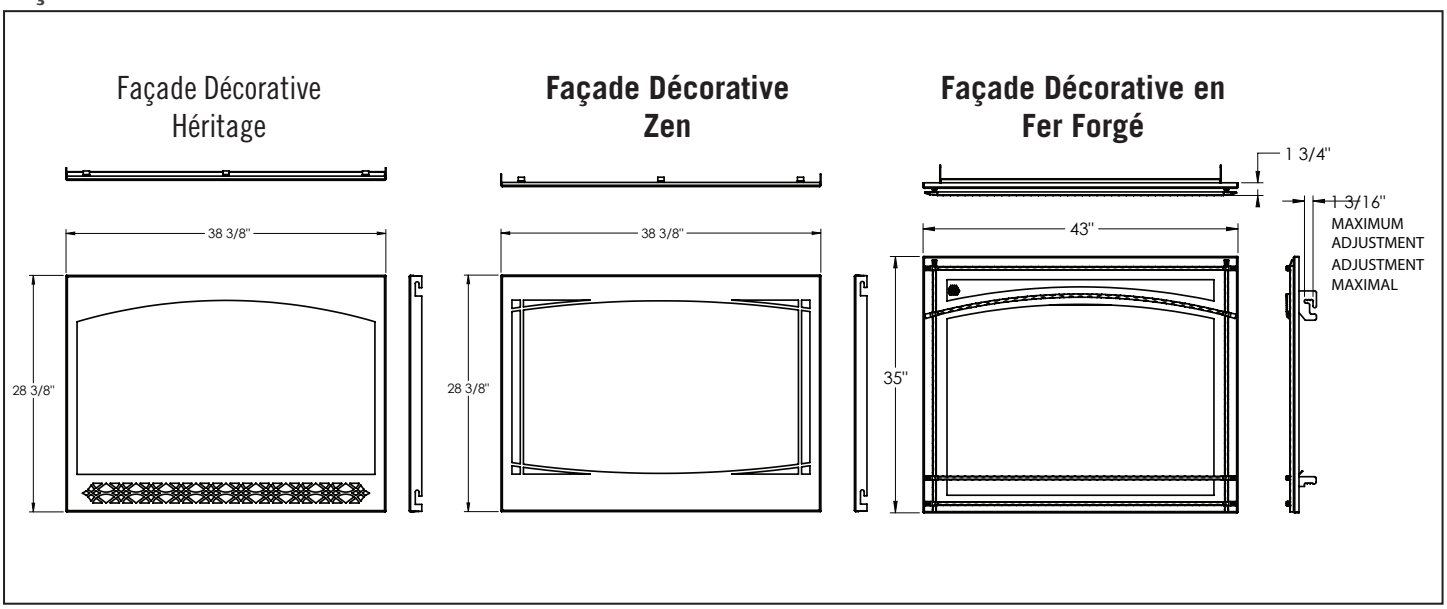


## Ossature approximatif

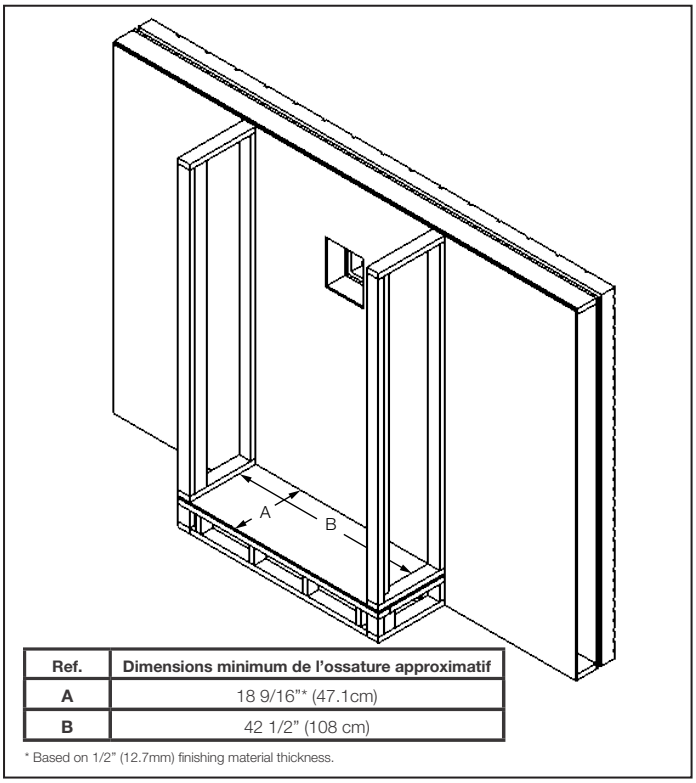


| Ref. | Dimensions minimum de l'ossature approximatif |
|---|---|
| A | 18 9/16"* (47.1cm) |
| B | 42 1/2" (108 cm) |

* Based on 1/2" (12.7mm) finishing material thickness.

## Ossature fini

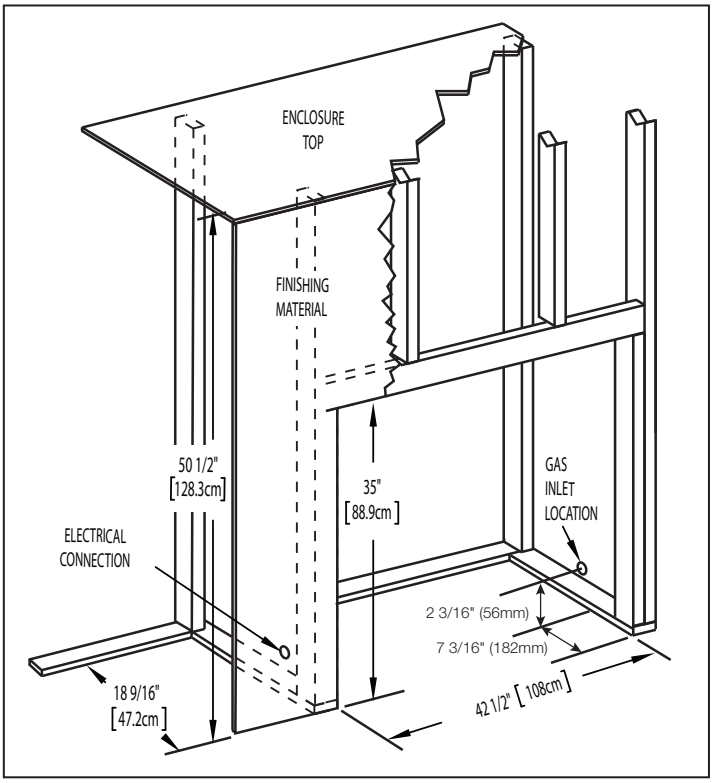




24 Napoleon Road, Barrie, Ontario, Canada L4M 0G8 • 214 Bayview Drive, Barrie, Ontario, Canada L4N 4Y8
Fireplaces, Heating and Cooling: 705-721-1212 • Grills: 705 726-4278 • napoleonproducts.com

# FOYER À GAZ VENTILÉ DIRECTE ASCENT[MD] 42

**Information du produit fourni n'est pas complet et est sujet de changer sans préavis. Consultez le manuel d'installation pour information d'installation actuel.**

## Dimensions

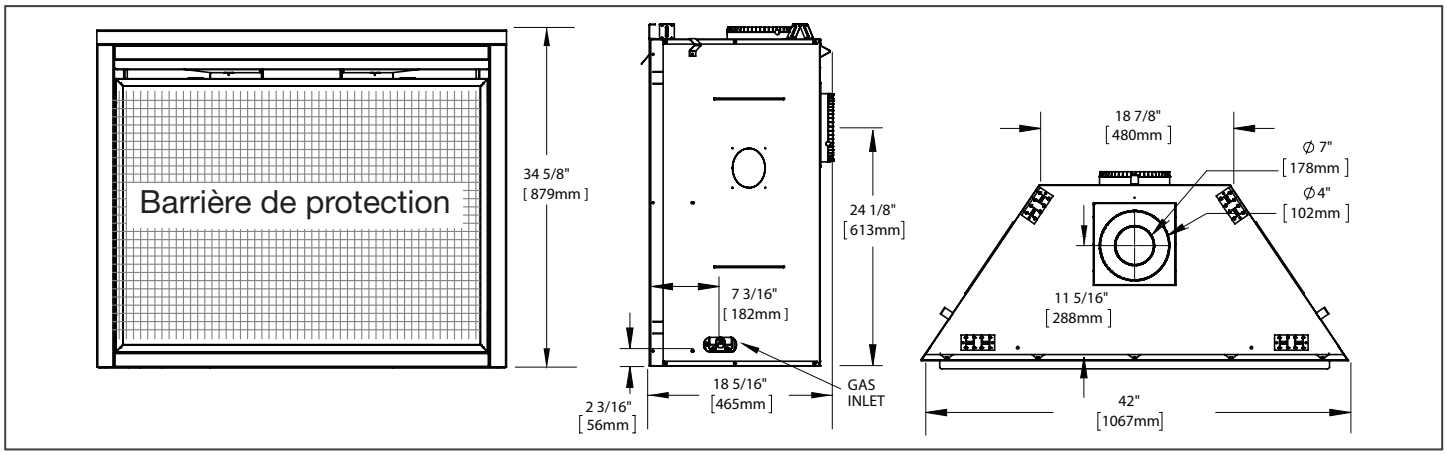


## Passage d'un section dans un mur

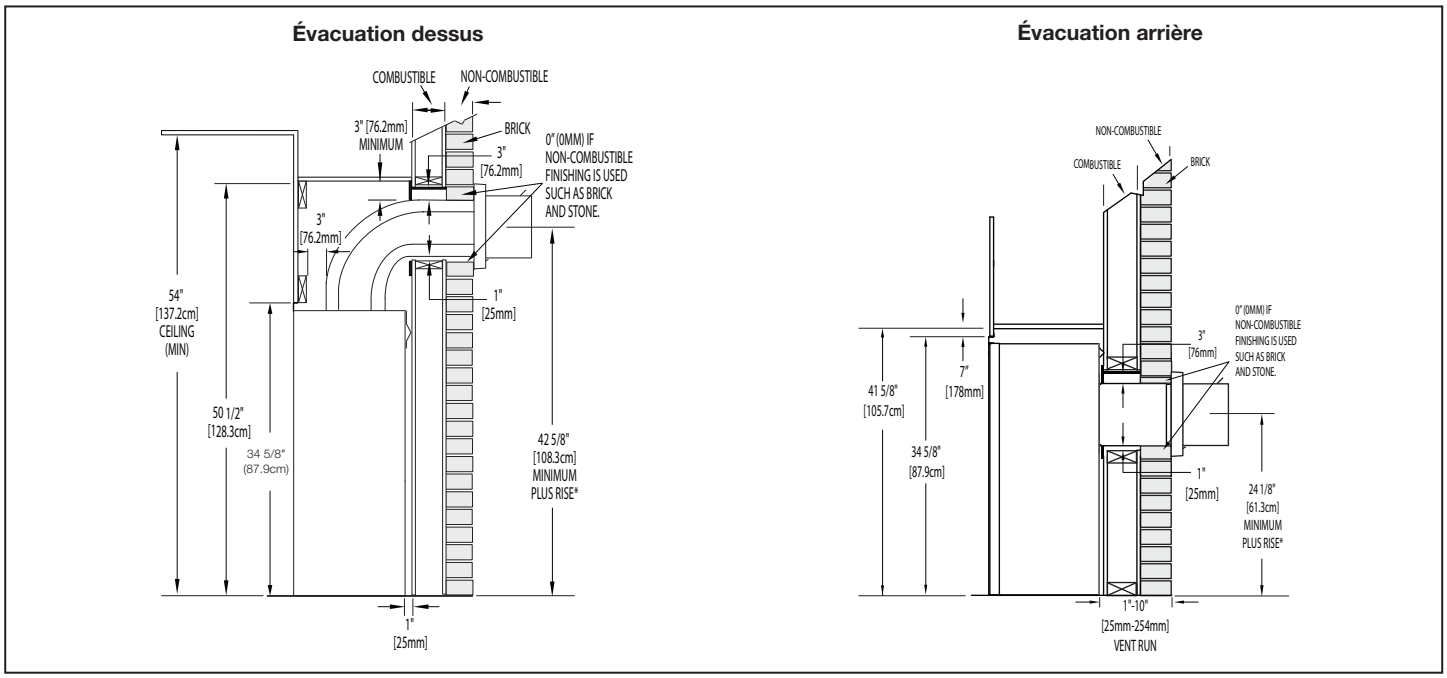


## Dégagements Combustible de la Tablette

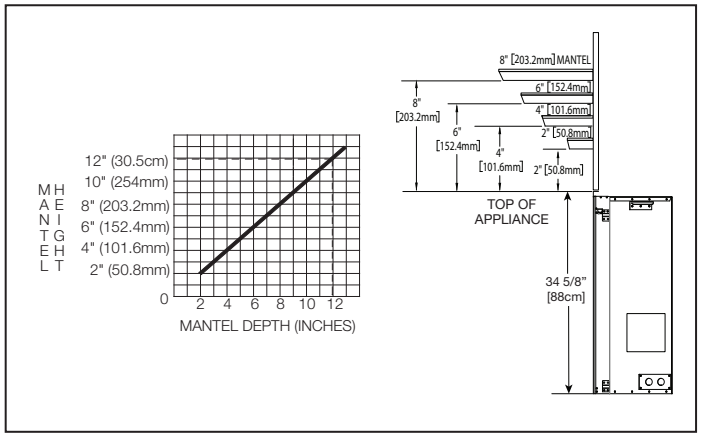


## Location de l'appareil

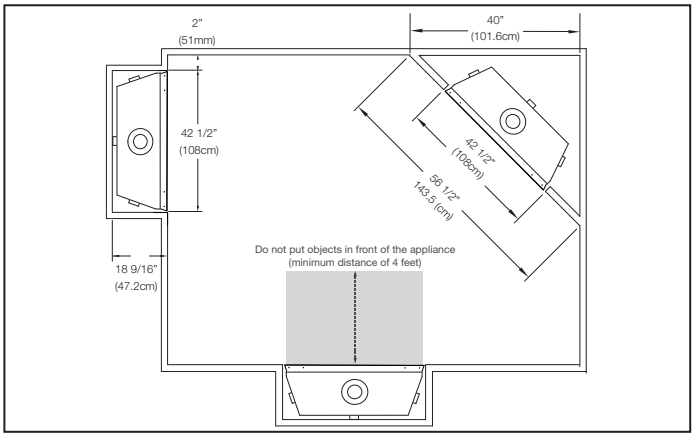


W415-1889 / 10.26.18

24 Napoleon Road, Barrie, Ontario, Canada L4M 0G8 • 214 Bayview Drive, Barrie, Ontario, Canada L4N 4Y8
Fireplaces, Heating and Cooling: 705-721-1212 • Grills: 705 726-4278 • napoleonproducts.com