This Owner's Manual is provided and hosted by Appliance Factory Parts.

Appliance Factory Parts
Experts in BBQ, Humidifier, & Appliance Parts
1-800-955-7075

Napoleon B36NTR-1 Owner's Manual

Shop genuine replacement parts for Napoleon B36NTR-1

ASCENT™ 36

Direct Vent, Millivolt Ignition

Natural Gas

Find Your Napoleon Fireplace Parts - Select From 171 Models

-------- Manual continues below --------

ASCENT™ 36 DIRECT VENT GAS FIREPLACE

Specifications

Model	BTU	Width		Height		Depth		Viewing Area
		Actual	Framing	Actual	Framing	Actual	Framing	
B36	18,000	35	35 1/2	34 5/8	35	15 3/4	16	23 11/16 X 30 11/16

Front Options

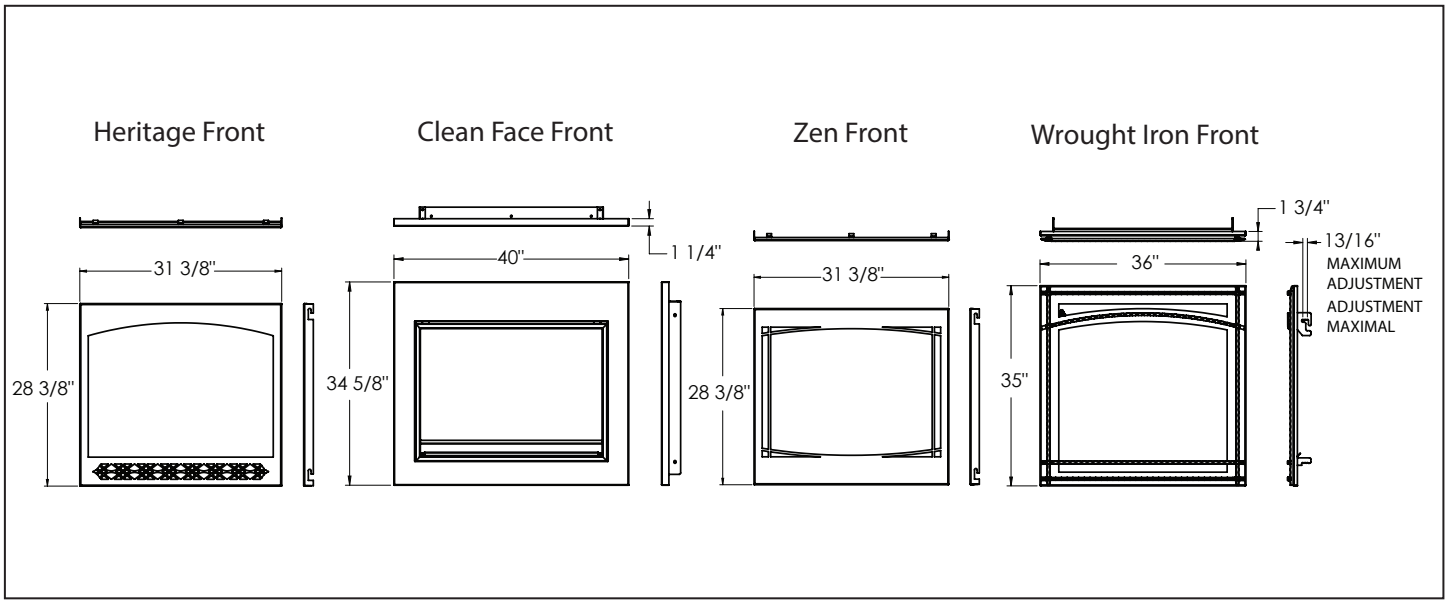

Rough Framing

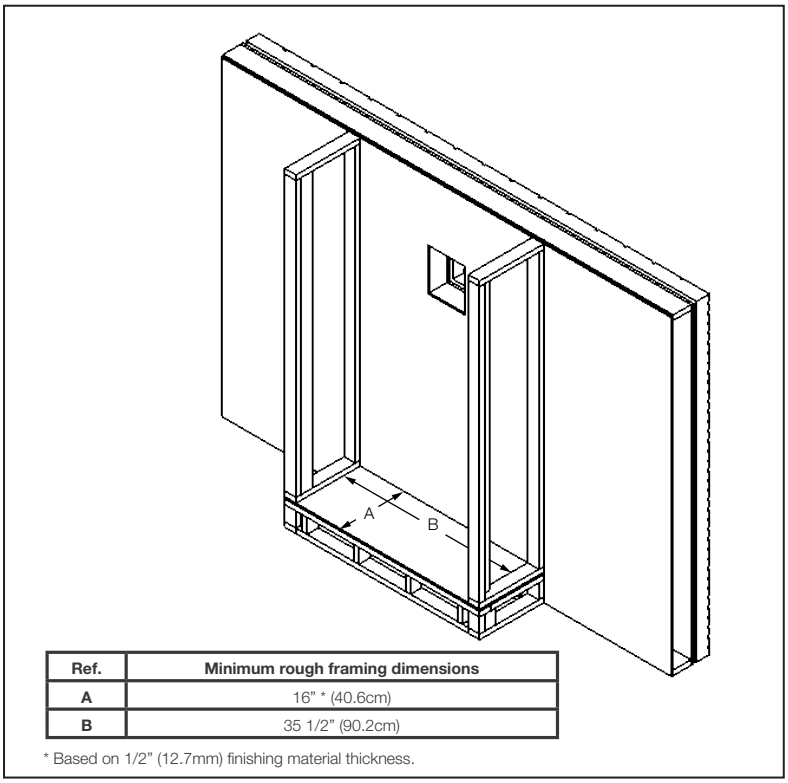

Ref.	Minimum rough framing dimensions
A	16" * (40.6cm)
B	35 1/2" (90.2cm)

* Based on 1/2" (12.7mm) finishing material thickness.

Finish Framing

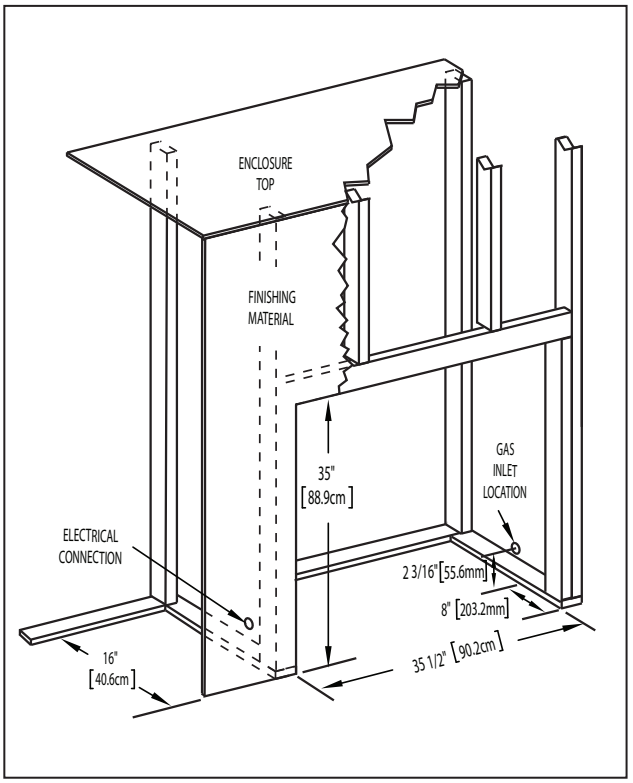

24 Napoleon Road, Barrie, Ontario, Canada L4M 0G8 • 214 Bayview Drive, Barrie, Ontario, Canada L4N 4Y8
Fireplaces, Heating and Cooling: 705-721-1212 • Grills: 705 726-4278 • napoleonproducts.com

ASCENT™ 36 DIRECT VENT GAS FIREPLACE

Product information provided is not complete and is subject to change without notice. Please consult the installation manual for the most up to date installation information.

Dimensions

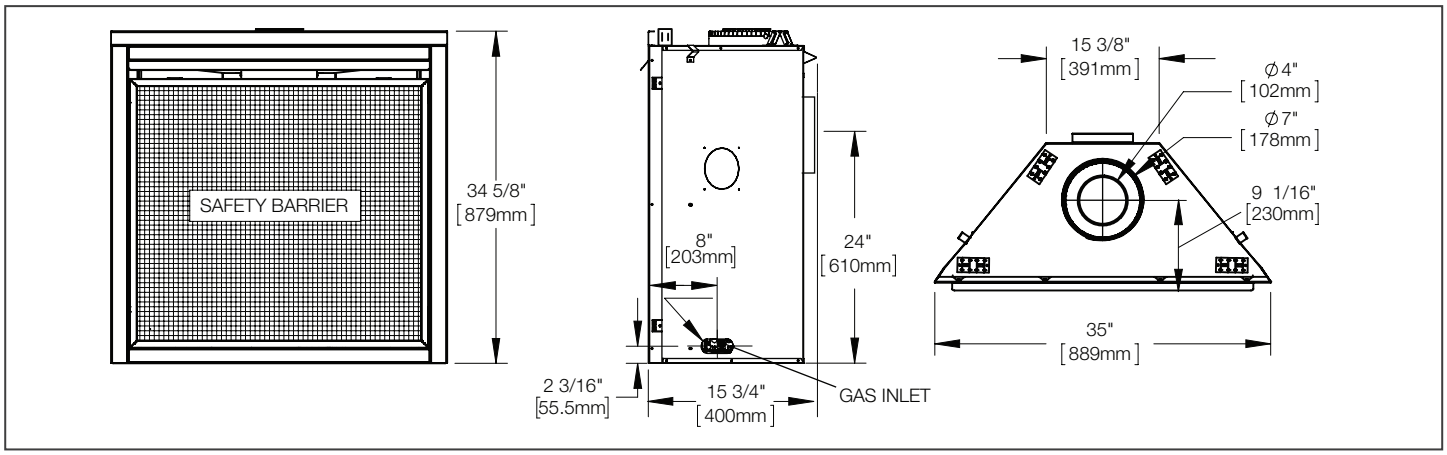

Wall Penetration

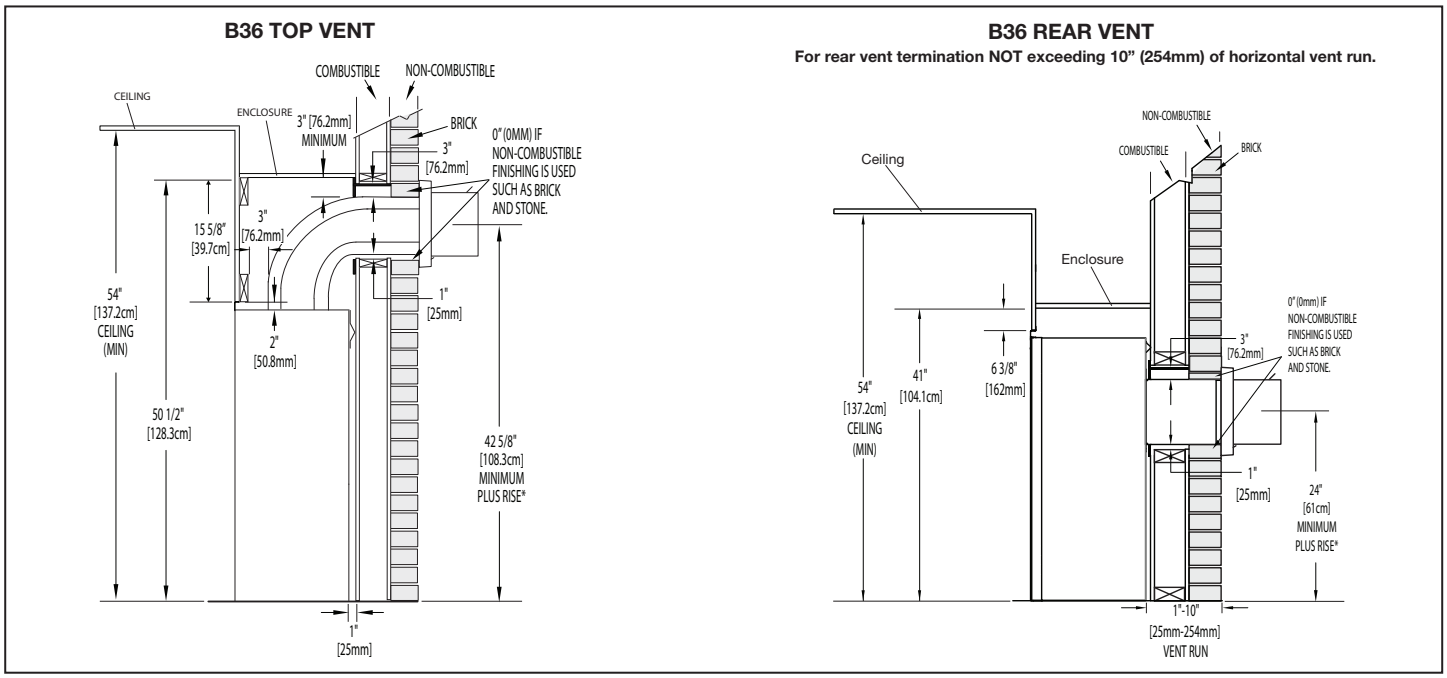

Combustible Mantel Clearances

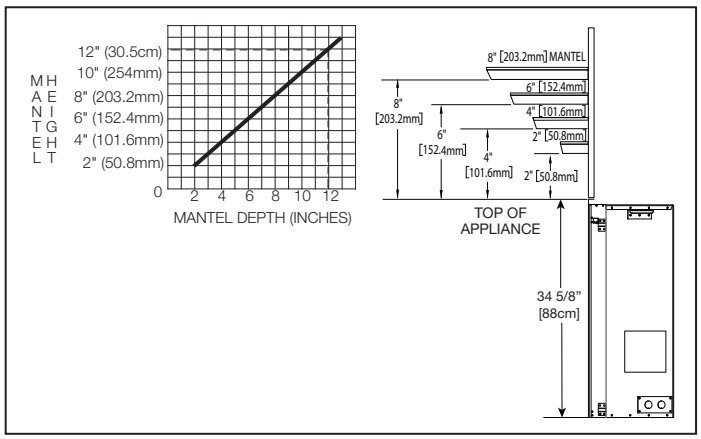

Appliance Location

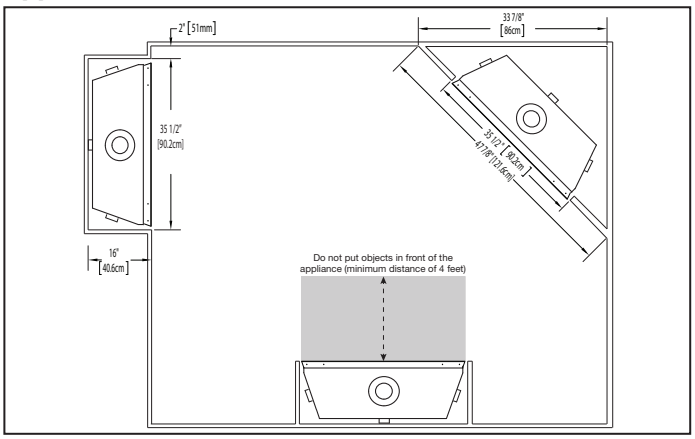

W415-1885 / 10.26.18

24 Napoleon Road, Barrie, Ontario, Canada L4M 0G8 • 214 Bayview Drive, Barrie, Ontario, Canada L4N 4Y8
Fireplaces, Heating and Cooling: 705-721-1212 • Grills: 705 726-4278 • napoleonproducts.com

FOYER À GAZ VENTILÉ DIRECTE ASCENT[MD] 36

Spécifications

Modèle	BTU	Largeur		Hauteur		Profondeur		Dimensions de Vision
		Réel	Ossature	Réel	Ossature	Réel	Ossature	
B36	18,000	35	35 1/2	34 5/8	35	15 3/4	16	23 11/16 X 30 11/16

Façades Décoratives

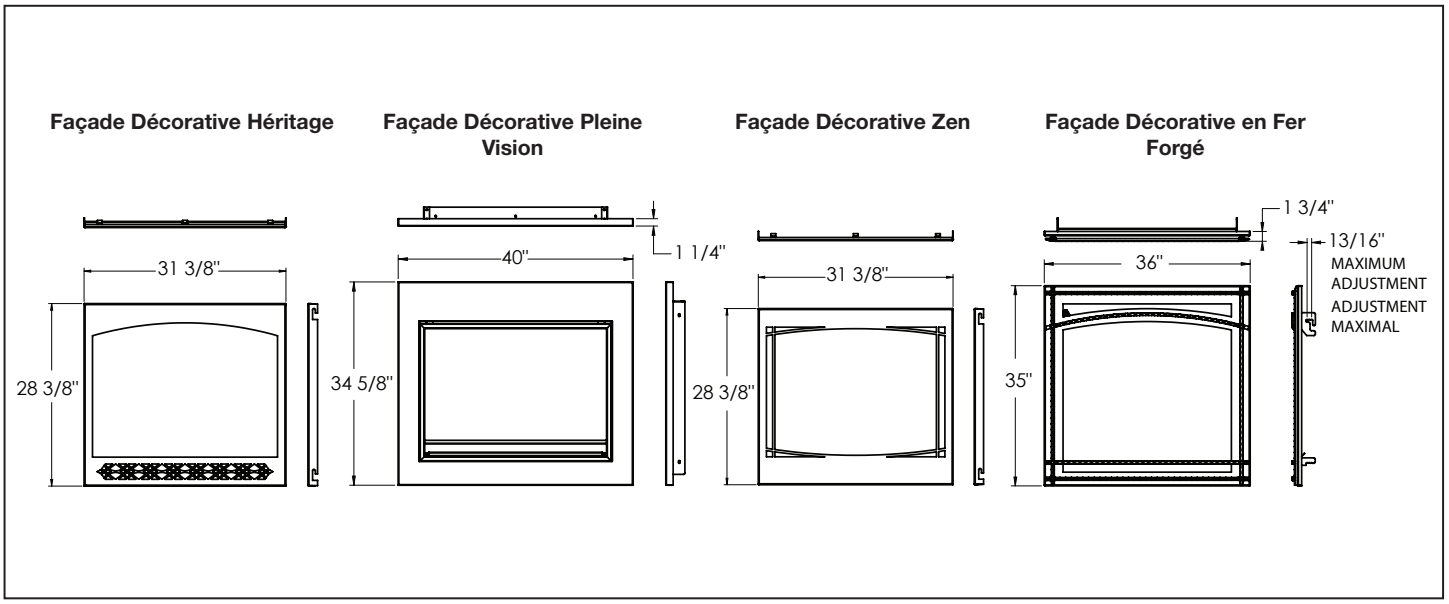

Ossature approximatif

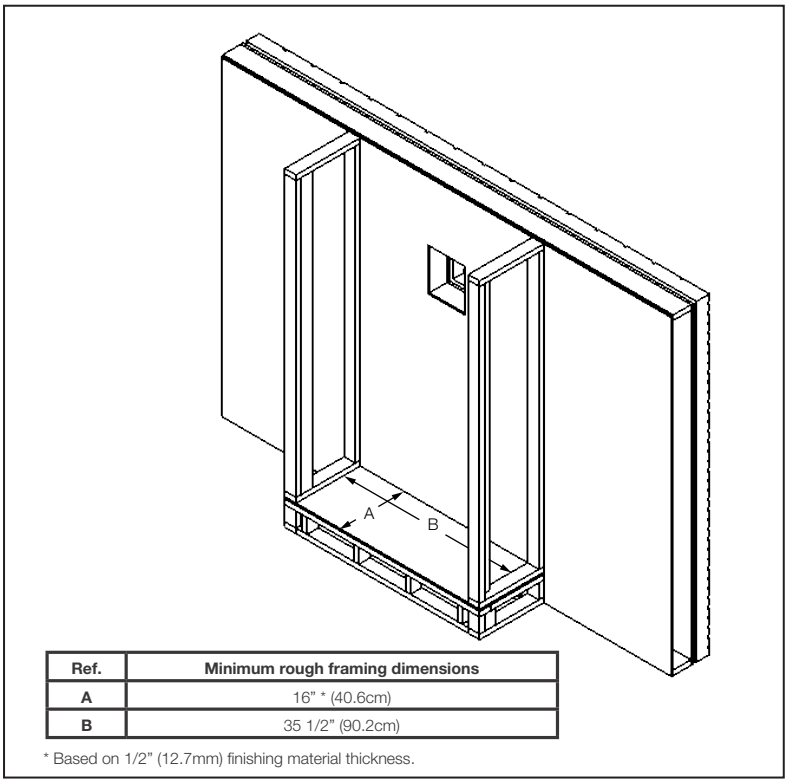

Ref.	Minimum rough framing dimensions
A	16" * (40.6cm)
B	35 1/2" (90.2cm)

* Based on 1/2" (12.7mm) finishing material thickness.

Ossature fini

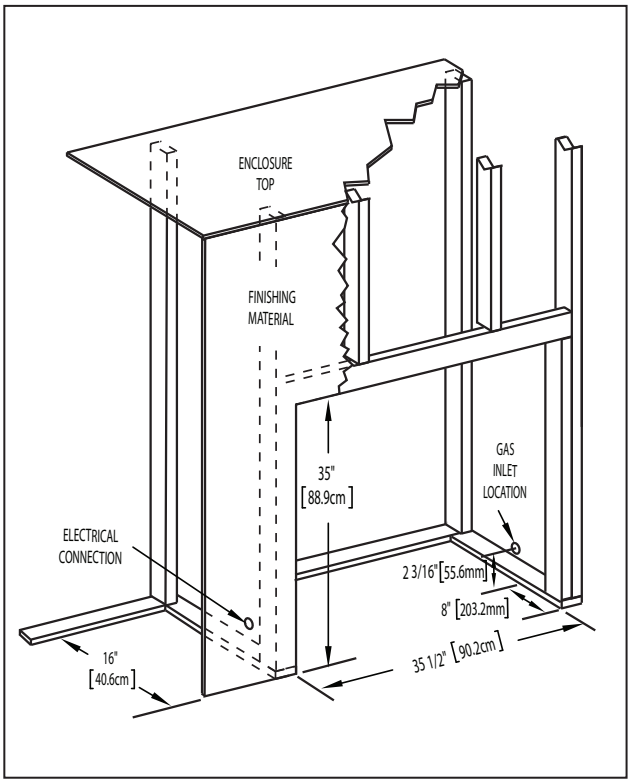

24 Napoleon Road, Barrie, Ontario, Canada L4M 0G8 • 214 Bayview Drive, Barrie, Ontario, Canada L4N 4Y8
Fireplaces, Heating and Cooling: 705-721-1212 • Grills: 705 726-4278 • napoleonproducts.com

FOYER À GAZ VENTILÉ DIRECTE ASCENT[MD] 36

Information du produit fourni n'est pas complet et est sujet de changer sans préavis. Consultez le manuel d'installation pour information d'installation actuel.

Dimensions

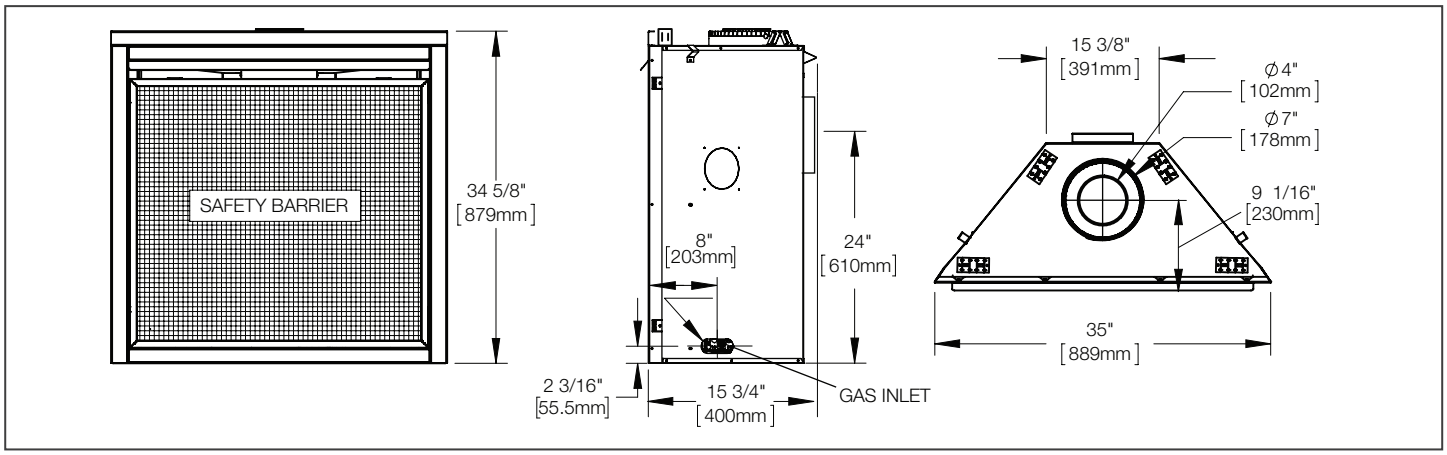

Passage d'un section dans un mur

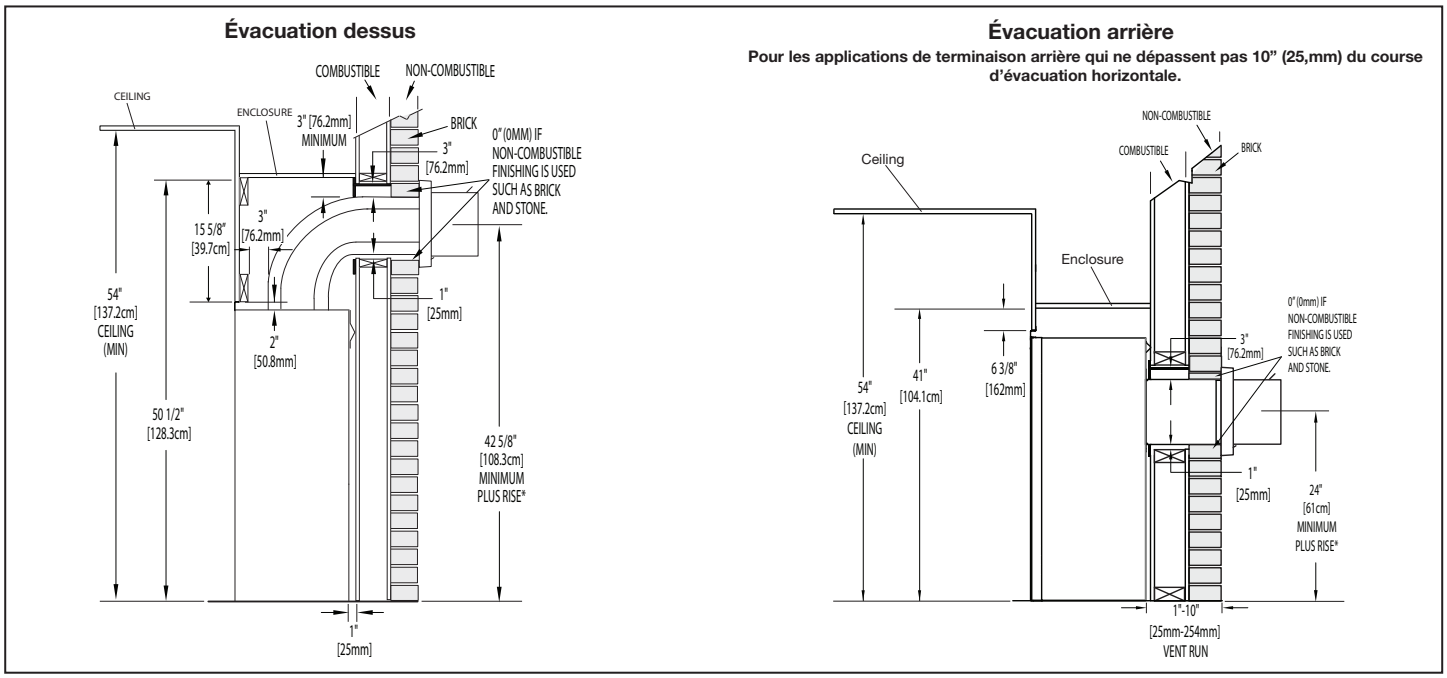

Dégagements Combustible de la Tablette

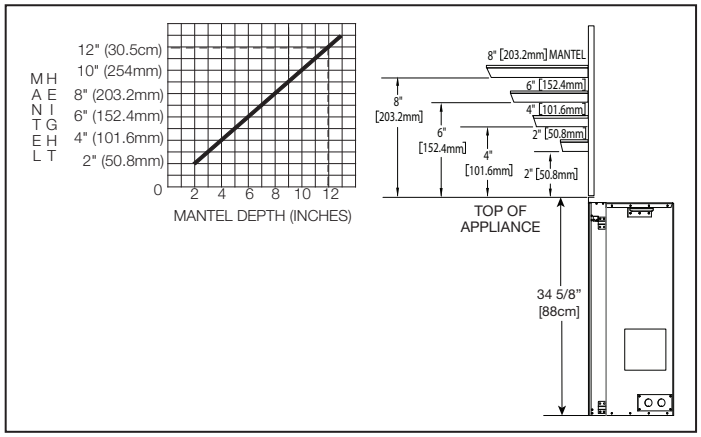

Location de l'appareil

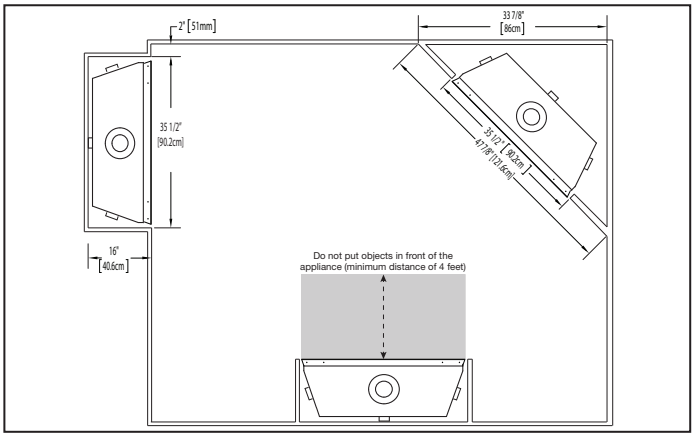

W415-1885 / 10.26.18

24 Napoleon Road, Barrie, Ontario, Canada L4M 0G8 • 214 Bayview Drive, Barrie, Ontario, Canada L4N 4Y8
Fireplaces, Heating and Cooling: 705-721-1212 • Grills: 705 726-4278 • napoleonproducts.com