This Owner's Manual is provided and hosted by Appliance Factory Parts.

Appliance Factory Parts
Experts in BBQ, Humidifier, & Appliance Parts
1-800-955-7075

Bull 96000
Owner's Manual

Shop genuine replacement parts for Bull 96000

Find Your Bull Grill Parts - Select From 35 Models

-------- Manual continues below --------

ASSEMBLY & OPERATING INSTRUCTIONS

MODEL #96000 POWER BURNER, L.P. (PROPANE)
MODEL #96001 POWER BURNER, N.G. (NATURAL GAS)

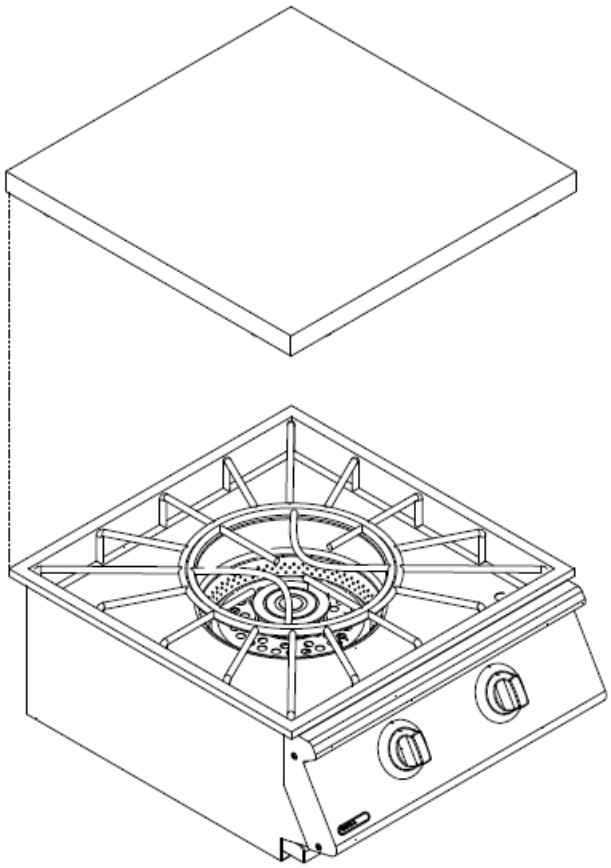

TABLE OF CONTENTS PAGE

SAFETY INSTRUCTIONS.....2
THE LOCATION FOR YOUR POWER BURNER.....2
CHECKING FOR GAS LEAKS.....2
NATURAL GAS SAFETY.....3
PROPANE GAS SAFETY.....4
INSTALLATION INSTRUCTIONS.....5
SPECIFICATIONS FOR POWER BURNER STRUCTURE.....5
CONNECTING TO GAS SOURCE.....6
NATURAL GAS CONNECTIONS.....6
PROPANE GAS CONNECTIONS.....6
OUTDOOR NATURAL GAS POWER BURNER INSTALLATION SPECIFICATIONS.....7
OUTDOOR PROPANE GAS POWER BURNER INSTALLATION SPECIFICATIONS.....8
LP GAS TANK RETENTION.....9
INSPECTING / CLEANING BURNER AND GAS ORIFICES.....10
BURNER CLEANING.....10
BURNER SHUTTER CLIP INSPECTION / ADJUSTMENT.....12
BURNER REPLACEMENT INTO INSERT.....12
IGNITER / ELECTRODE CHECK.....13
BURNER OPERATION CHECK.....13
LIGHTING & OPERATING INSTRUCTIONS.....14
LIGHTING PROCEDURES.....14
OPERATING PROCEDURE.....14
CLEANING & MAINTENANCE.....15
TROUBLESHOOTING.....16
IF POWER BURNER FAILS TO OPERATE PROPERLY.....16
YELLOW FLAME.....16
FLASH BACK.....16
PARTS LIST.....17
EXPLODED ILLUSTRATION.....18
LIMITED WARRANTY.....19
REGISTERING YOUR POWER BURNER.....19

- READ THE FOLLOWING INSTRUCTIONS CAREFULLY AND BE SURE YOUR POWER BURNER IS PROPERLY INSTALLED, ASSEMBLED AND CARED FOR. FAILURE TO FOLLOW THESE INSTRUCTIONS MAY RESULT IN SERIOUS BODILY INJURY AND/OR PROPERTY DAMAGE. IF YOU HAVE QUESTIONS CONCERNING ASSEMBLY OR OPERATION, CONSULT YOUR DEALER, GAS APPLIANCE SERVICE REPRESENTATIVE OR YOUR GAS COMPANY.

- NOTE TO INSTALLER:
LEAVE THESE INSTRUCTIONS WITH THE CONSUMER AFTER INSTALLATION.

- NOTE TO THE CONSUMER:
RETAIN THESE INSTRUCTIONS FOR FUTURE REFERENCE.

- THIS OUTDOOR COOKING GAS APPLIANCE IS NOT INTENDED TO BE INSTALLED IN OR ON RECREATIONAL VEHICLES AND/OR BOATS.

***FOR WARRANTY PURPOSES, PLEASE RECORD YOUR MODEL NUMBER, SERIAL NUMBER, DATE OF PURCHASE & A COPY OF YOUR RECEIPT OR INVOICE IN THE BACK OF YOUR MANUAL ON PAGE 19.**

SAFETY INSTRUCTIONS

READ CAREFULLY BEFORE ASSEMBLY AND OPERATION OF YOUR POWER BURNER

This power burner must be installed in accordance with local codes or, if in an area without local codes, with the latest edition of the National Fuel Gas Code ANSI Z223.1. In Canada, installation must conform to the standard CAN/ CGA 1-b149.1 and/or .2 (Installation Code for Gas Burning Appliances and Equipment) and any local codes.

WARNING: Fuels used in gas or oil-fired appliances and the products of combustion of such fuels, contain chemicals known to the State of California to cause cancer, birth defects and/or reproductive harm. This warning is issued pursuant to California Health & Safety Code Sec. 25249.6.

THE LOCATION FOR YOUR POWER BURNER

DO NOT use your power burner in garages, porches, breezeways, sheds or other enclosed areas. Your power burner is to be used **OUTDOORS ONLY**, with at least **21 inches** clearance from the back and side of any combustible surface. The power burner should not be placed under or on top of any surface that will burn. Do not obstruct the flow of combustion and ventilation air around the power burner housing.

PROTECT CHILDREN: Keep children away from the power burner during use and until the power burner has cooled after you are finished. Do not allow children to operate the power burner.

WARNING! FOR YOUR SAFETY...

- DO NOT store or use gasoline or other flammable vapors and liquids in the vicinity of this or any other appliance.

- DO NOT store empty or full spare gas cylinders and/or chemicals under or near this or any other appliance.

- Keep the fuel hose away from hot surfaces. Protect the fuel hose from dripping grease and/or liquids. Avoid unnecessary twisting of the hose. Visually inspect the hose prior to each use for cuts, cracks excessive wear or other damage and replace if necessary.

- NEVER test for gas leaks with a lighted match or open flame.

- NEVER light power burner with lid on or before checking to ensure burner tubes are fully seated over gas orifices.

- NEVER lean over cooking surface while lighting power burner. Use good quality insulated potholder mitts. Use dry mitts only; damp or wet mitts on a hot surface may cause steam which could result in personal injury.

DANGER! IF YOU SMELL GAS...

1. Shutoff gas to the appliance at its' source.

2. Extinguish any open flame.

3. Remove power burner lid to release any accumulation of fumes.

4. If gas odor persists, immediately contact your gas supplier or your fire department.

CHECKING FOR GAS LEAKS

NEVER TEST FOR GAS LEAKS WHILE THE POWER BURNER IS LIT! Prior to the first use and at the beginning of each new season (or, if using LP, whenever gas cylinder is changed), it is a must that you check for gas leaks. Follow these steps:

1. Make a soap solution by mixing one part liquid detergent and one part water.
2. Turn off heat control valve(s), and then turn on gas at source.
3. Apply the soap solution to all gas connections: bubbles will appear in the soap solution if connections are not properly sealed. Tighten or repair as necessary.
4. If you have a gas leak that you cannot repair, turn off the gas at the source, disconnect fuel line from the power burner and immediately call your burner dealer and gas supplier for professional assistance.

SAFETY INSTRUCTIONS (CONT.)

NATURAL GAS SAFETY

Your Natural Gas power burner is designed to operate on natural gas ONLY, at a pressure of 4" water column (W.C.) regulated at the natural gas regulator attached at the back of the power burner. Check with your gas utility for local gas pressure and with your local municipality for building code requirements.

Check with your gas utility or with local building codes for instructions to install gas supply line, or call a licensed and knowledgeable installer.

It is recommended that an "ON-OFF" shutoff valve be installed at the gas supply source:

- Outdoors after gas line piping exits outside wall or before gas line piping enters ground.
- Indoors in the branch fuel line in an accessible location near the supply line.

Pipe sealing compound or pipe thread tape of the type resistant to the action of natural gas must be used on all male pipe thread. Apply compound or tape to at least the first three threads when making the connection.

Disconnect your power burner from fuel source when the gas supply is being tested at high pressures. This appliance and its individual shutoff valve must be disconnected from the gas supply piping system during any pressure testing of that system at pressures in excess of 1/2 psig (3.5 kPa).

Turn off your power burner when the gas supply is being tested at low pressures. This appliance must be isolated from the gas supply piping system by closing its individual valve.

WARNING: Gas valves are preset at the factory to operate on LP or natural gas. If you wish to convert to a different gas type, be sure to contact your power burner dealer, licensed plumber or authorized service center for further details. Conversion kits are not sold to the general public and require a professional to perform service. Failure to properly convert a unit can cause serious injury to yourself and/or others, irreparable damage to your power burner and void of warranty.

SAFETY! BEWARE OF SPIDERS

CAUTION: BURNERS MUST BE INSPECTED AND CLEANED BEFORE FIRST USE.

Spiders and small insects occasionally spin webs or make nests in the burners during warehousing, transit and/or after long periods of non-use. These webs can lead to a gas flow obstruction, which could result in a fire in and around the burner tubes. This type of fire is known as "FLASH-BACK" and can cause serious damage to your power burner and create an unsafe operating condition for the user. Although an obstructed burner tube is not the only cause of "FLASH BACK" it is the most common cause, and frequent inspection and cleaning of the burners is necessary.

SAFETY INSTRUCTIONS (CONT.)

PROPANE GAS SAFETY

Your Propane power burner is designed to operate on propane gas ONLY, at a pressure regulated at 11" water column (W.C.) when equipped with the correct propane orifices and a propane regulator on the supply line regulated at the residential meter.

Your propane power burner is designed to be used with a standard 20 lb gas cylinder. In the United States, the gas cylinder must be constructed and marked in accordance with specifications of the US Department of Transportation for Propane Gas Cylinders.

Always keep cylinder securely fastened in an upright position.

Never connect an unregulated propane gas cylinder to the power burner.

Do not subject Propane cylinders to excessive heat.

CAUTION: Never store a Propane gas cylinder inside a building or in the vicinity of any gas-burning appliance.

WARNING: Gas valves are preset at the factory to operate on LP or natural gas. If you wish to convert to a different gas type, be sure to contact your power burner dealer, licensed plumber or authorized service center for further details. Conversion kits are not sold to the general public and require a professional to perform service. Failure to properly convert a unit can cause serious injury to yourself and/or others, irreparable damage to your power burner and void of warranty.

SAFETY! BEWARE OF SPIDERS

CAUTION: BURNERS MUST BE INSPECTED AND CLEANED BEFORE FIRST USE.

Spiders and small insects occasionally spin webs or make nests in the burners during warehousing, transit and/or after long periods of non-use. These webs can lead to a gas flow obstruction, which could result in a fire in and around the burner tubes. This type of fire is known as "FLASH-BACK" and can cause serious damage to your power burner and create an unsafe operating condition for the user. Although an obstructed burner tube is not the only cause of "FLASH BACK" it is the most common cause, and frequent inspection and cleaning of the burners is necessary.

WARNING

- **Do not store a spare or disconnected liquid propane cylinder under or near this power burner.**
- **A dented or rusty liquid propane cylinder may be hazardous and should be check by your liquid propane provider.**
- **Do not use a liquid propane cylinder with a damaged valve.**

INSTALLATION INSTRUCTIONS

PLEASE READ THESE INSTRUCTIONS BEFORE INSTALLING YOUR POWER BURNER

Your power burner comes to you fully assembled. We strongly recommend professional installation and hookup of the gas power burner. These instructions will provide you with the measurements necessary for you or your builder to construct a masonry structure to house your outdoor gas power burner.

NOTE TO INSTALLER: Leave these instructions with the consumer for future reference**.** The power burner must be installed in accordance with all local building codes.

SPECIFICATIONS FOR POWER BURNER STRUCTURE

1. Your choice of masonry can be used for cabinet construction for the power burner; however it must be **non-combustible** material. Keep in mind when choosing a location for your power burner that it should NOT be located under any overhead combustible construction. Upper and lower level vents must be provided for combustion air on both sides of built-in cabinet. Vents on power burner insert must remain unobstructed to allow for combustion air and ventilation. Upper vents must be located within 5 inches from the top of the island enclosure to the bottom of the vent. Lower vents must be located within 1 inch from the bottom of the island enclosure to the bottom of the first vent openings and no more than 5 inches from the bottom of the island enclosure to the top of the vent. If not using Bull vents, the vents you use must meet ANSI Standard codes. The upper vents must have openings that have a total free area of not less than 1 sq in per lb of stored fuel capacity per vent and the lower vents must have openings that have a total free area of not less than 1/2 sq in per lb of stored fuel capacity per vent. Both upper and lower vent openings must have minimum dimensions so as to permit the entrance of a 1/8 in diameter rod.

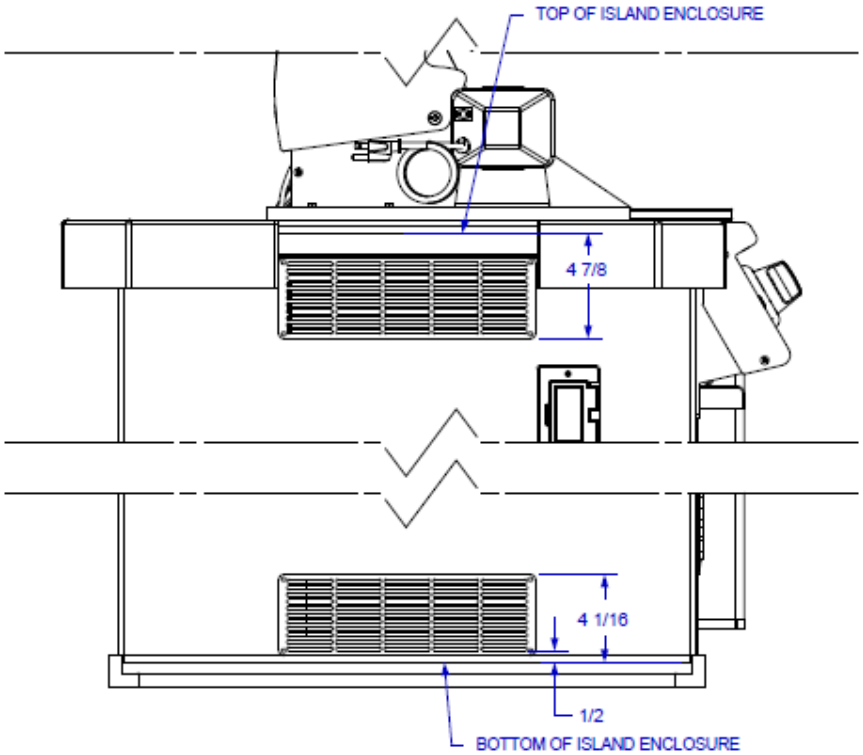

2. The power burner requires a wall opening of the following dimensions: **See PAGES 7 & 8 for different models.**
3. Place power burner assembly into wall opening as shown in illustration on pages 7 & 8.
4. **For propane gas LP TANK STORAGE AREA MUST BE ISOLATED FROM POWER BURNER AND VENTED.**
5. Do not use any combustible materials for this construction. Minimum horizontal clearance to adjacent combustible surface from side and back of the power burner must be **21 inches**.

INSTALLATION INSTRUCTIONS (CONT.)

CONNECTING TO GAS SOURCE

Refer to the following instructions and illustrations for typical gas supply connections. We strongly suggest professional installation **and** hook-up of the power burner.

IMPORTANT: Before connecting power burner to gas source, make sure power burner control knobs are in "OFF" position.

NATURAL GAS CONNECTIONS

IMPORTANT: Bull Outdoor Products does not recommend the use of any quick connect fittings or lines to the unit. Use of these types of fittings or lines could cause low gas flow and greatly reduce the performance of the unit.

- Pipe sealing compound or pipe thread tape of the type resistant to the action of natural gas must be used on all male pipe thread.
- Apply compound or tape to at least the first three threads when making the connection.
- Remove plastic or rubber cap from regulator installed on power burner.
- Attach stainless steel flex line 3/8" flare-female end to the regulator.
- Attached the other end of flex line to shut-off valve through a nipple.
- Attach a shut-off valve to gas supply pipe.

PERFORM GAS LEAK CHECK – REFER TO PAGE 2

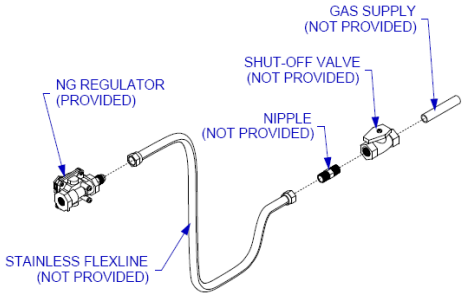

PROPANE GAS CONNECTIONS

- In the United States, the LP gas pressure regulator and hose assembly supplied with this unit must be used without alteration. If this assembly needs to be replaced, use only the type 1 specified in the parts list supplied with this unit. Use a LP tank with a type 1 cylinder valve.
- Make sure the tank is firmly secured in an upright position.
- Turn the black coupling nut of the hose and regulator assembly in a clockwise direction.
- Make sure it is completely threaded onto the cylinder valve before turning gas supply on.

PERFORM GAS LEAK CHECK – REFER TO PAGE 2

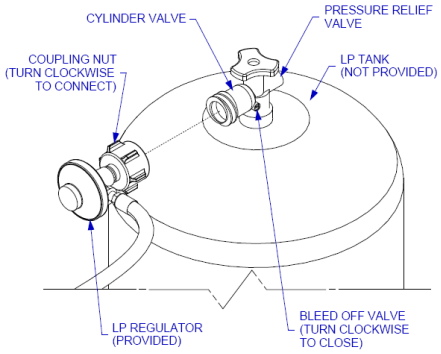

INSTALLATION INSTRUCTIONS (CONT.)

OUTDOOR NATURAL GAS POWER BURNER INSTALLATION SPECIFICATIONS

NOTE:

- When choosing a location for your power burner keep in mind that it should never be located under any overhead combustible construction.
- The sides and back of the power burner should not be any closer than **21 inches** to combustible construction.
- The counter top for the power burner is recommended at **26 inches** from the ground to the top of the counter.

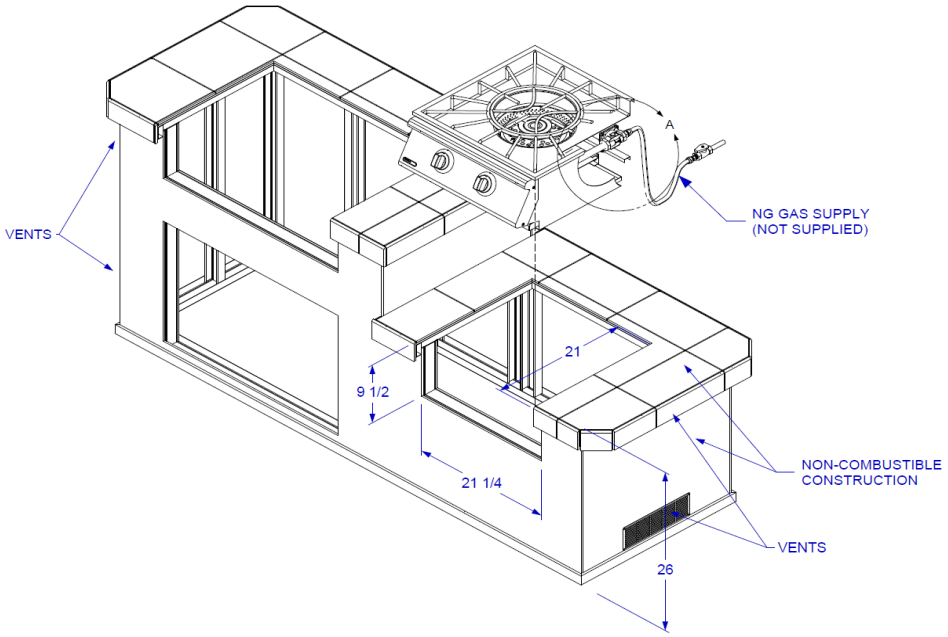

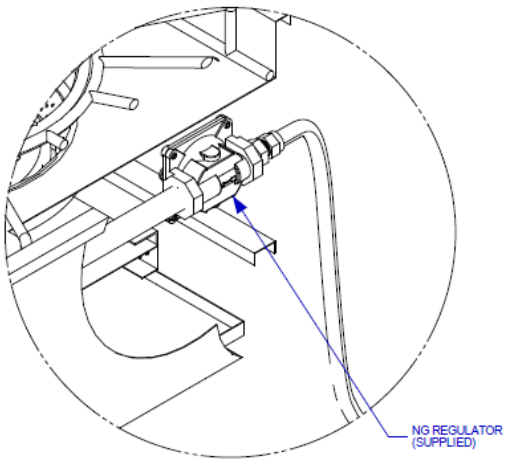

Detail A

INSTALLATION INSTRUCTIONS (CONT.)

OUTDOOR PROPANE GAS POWER BURNER INSTALLATION SPECIFICATIONS

NOTE:

- When choosing a location for your power burner keep in mind that it should never be located under any overhead combustible construction.
- The sides and back of the power burner should not be any closer than **21 inches** to combustible construction.
- **DO NOT** store empty or full spare tanks under or near this or any other appliance.
- The counter top for the power burner is recommended at **26 inches** from the ground to the top of the counter.
- The cylinder valve on the tank must be readily accessible for hand operation. The tank must be isolated enough to where it is shielded from radiation, open flames and protected from foreign matter such as hot drippings.
- There must be access so the tank can be connected, disconnected, inspected and leak tested outside of the cabinet. As well as access so that connections which could be disturbed when installing the tank in the cabinet can be leak tested inside the cabinet.

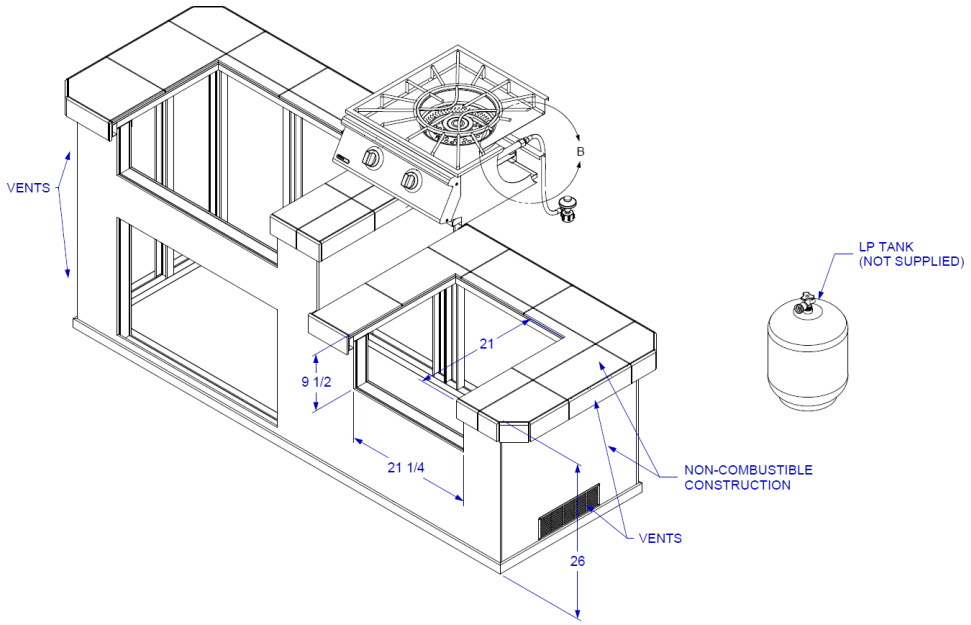

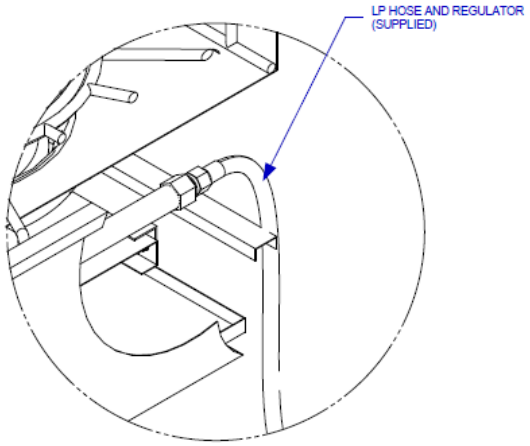

Detail B

INSTALLATION INSTRUCTIONS (CONT.)

LP GAS TANK RETENTION

If using a LP gas tank, the tank must be properly secured within the structure to prevent being knocked over.

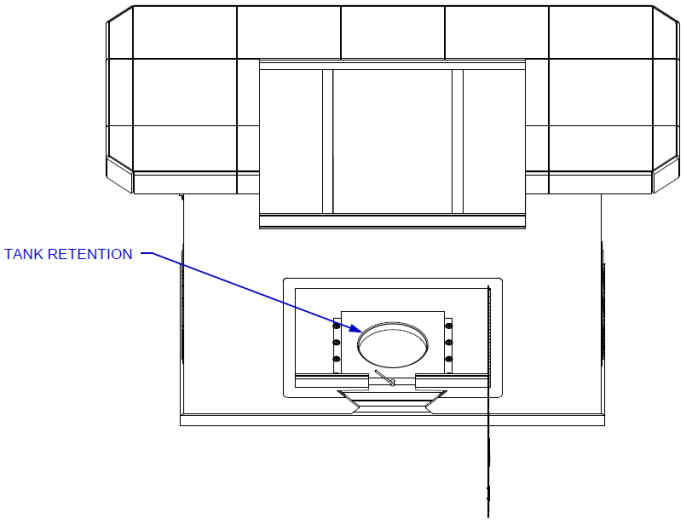

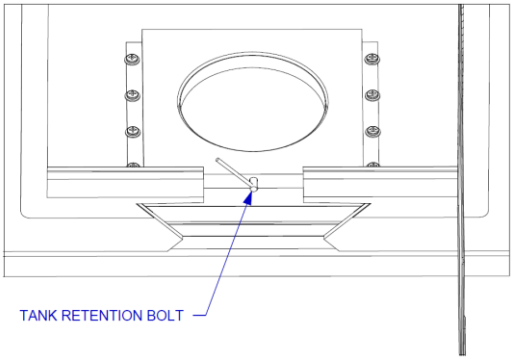

The tank retention system must be securely fastened to the bottom of the island with the use of bolts, washers and nuts. There must be a minimum clearance of 2" between the floor and the cylinder enclosure. Once secured, place the LP tank in the tank retention system and tighten the tank retention bolt until the tank is snug and cannot move.

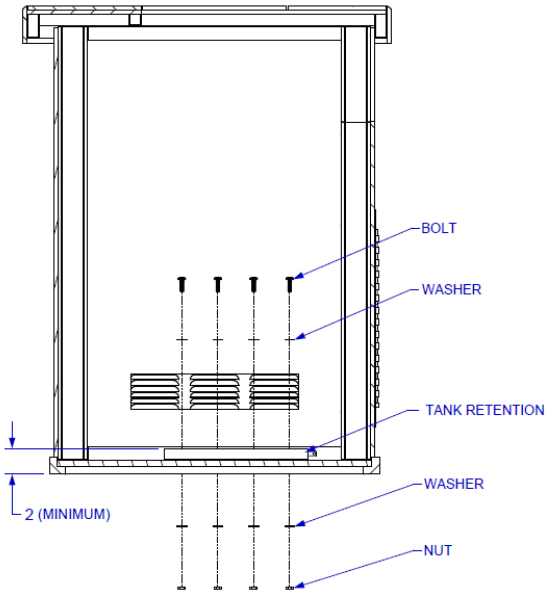

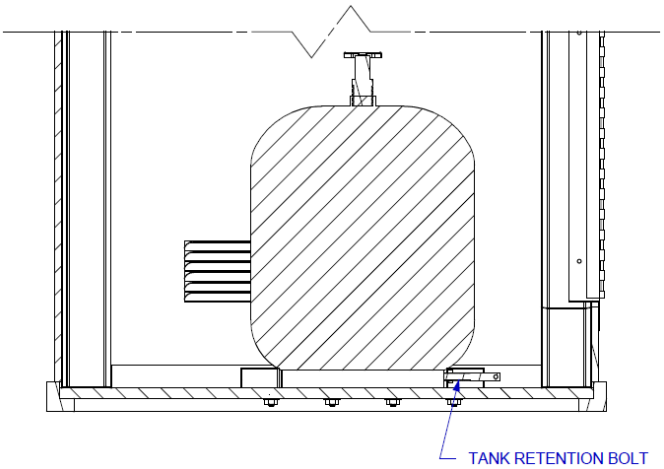

INSPECTING / CLEANING BURNER AND GAS ORIFICES

By following these cleaning procedures on a timely basis, your power burner will be kept clean and working properly with minimum effort.

CAUTION – Always turn off the gas supply prior to clearing your power burner.

BURNER CLEANING

1. Remove burner from the grill insert (see instructions below).
2. Remove the insert clip by unfastening the two screws.

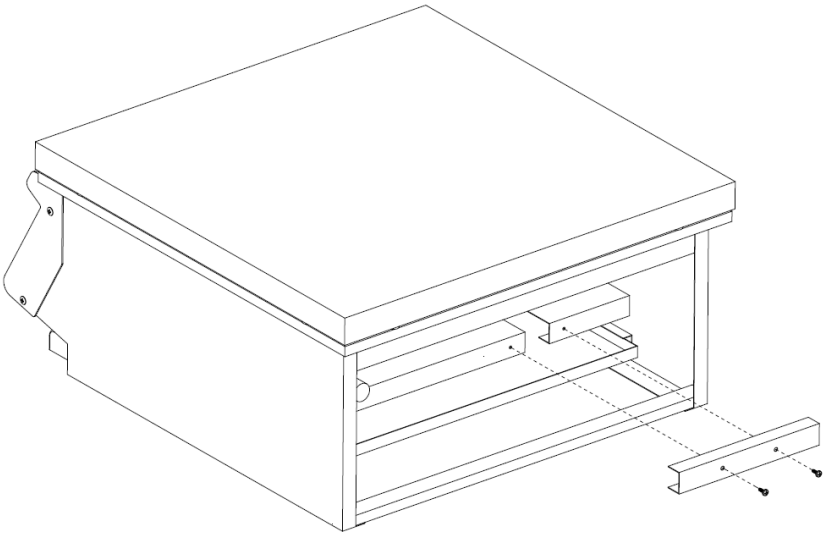

3. Remove necessary parts (grates, brass cap, etc.) in order to get to the four screws that hold the burner onto the insert assembly.

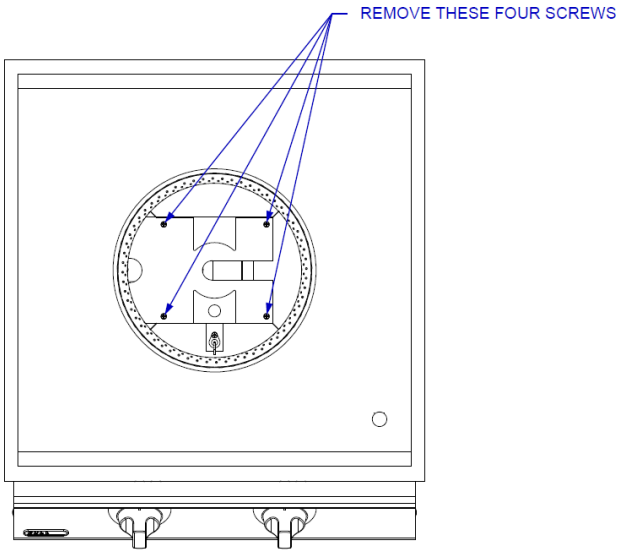

INSPECTING / CLEANING BURNER AND GAS ORIFICES (CONT.)

4. Remove the burner by sliding it through the cutout in the insert assembly. Note: It's easiest to remove the burner by rotating it 90° so that the burner tube faces the front.

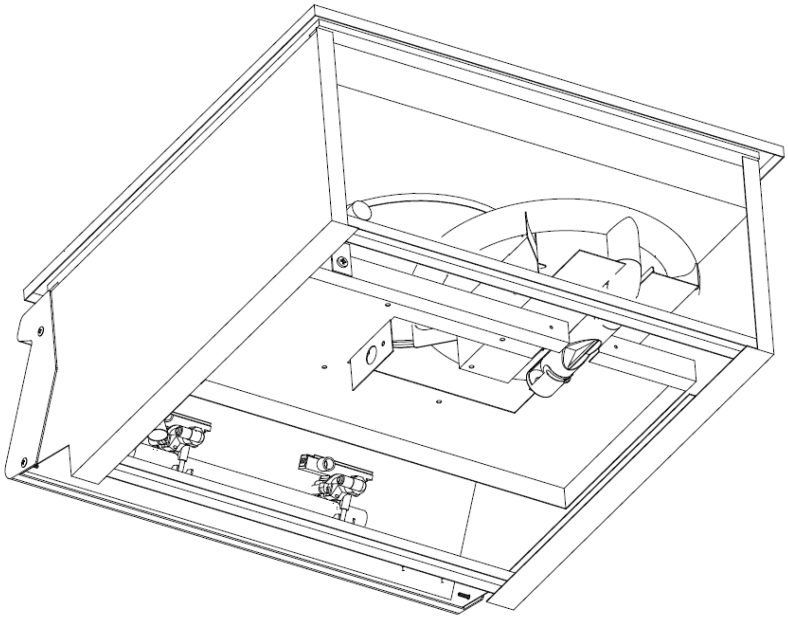

5. Bend a stiff wire and run it through the burner tube several times. Check all burner ports and clean any clogged hole.

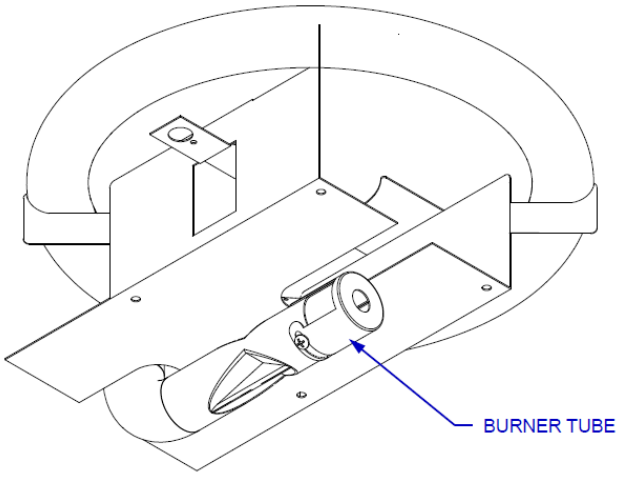

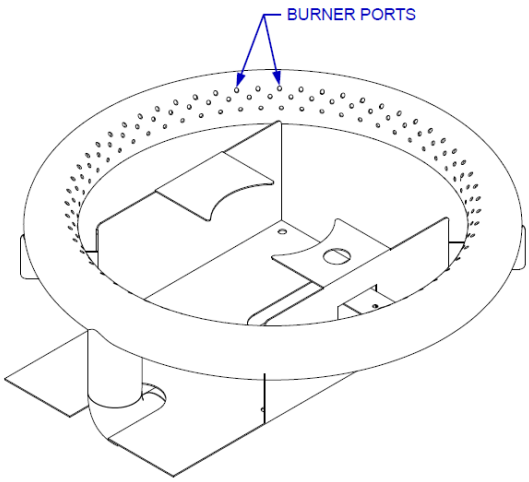

6. Inspect the burner assembly for any openings caused by corrosion.
7. Inspect the ports on the brass cap and clean any clogged hole.

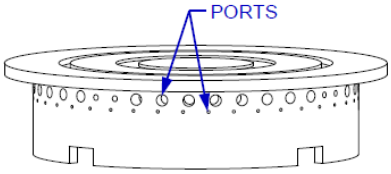

INSPECTING / CLEANING BURNER AND GAS ORIFICES (CONT.)

BURNER SHUTTER CLIP INSPECTION / ADJUSTMENT

The burner is set to a factory setting; however the air to fuel mixture may need to be adjusted to accommodate different gas pressures. In order to adjust the air to fuel mixture, loosen the screw and rotate the shutter clip to the appropriate setting (see diagrams below). Tighten the screw. This should improve burner efficiency.

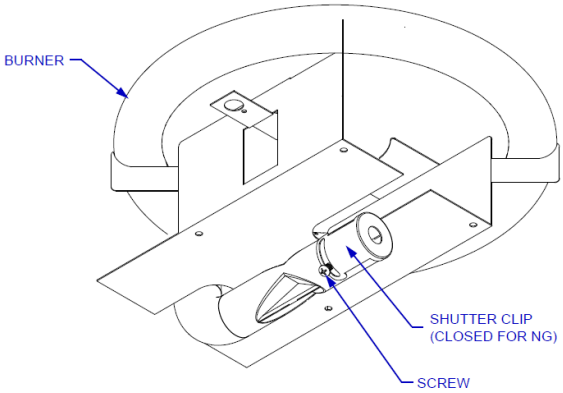

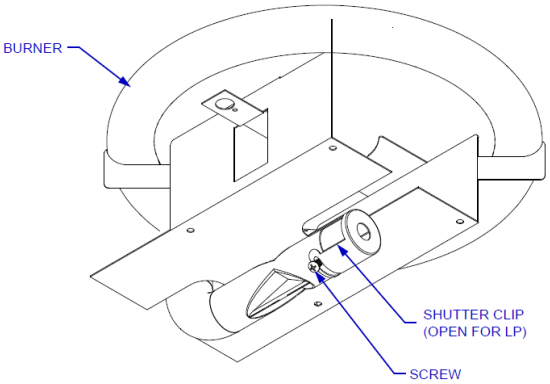

BURNER REPLACEMENT INTO INSERT

1. Replace the burner back into the insert assembly.
2. Check the burner for proper location after replacing. **Make sure the burner orifice is inside of the burner tube (see drawing below). If the burner orifice does not fit inside the burner tube, lighting the burner may cause explosion and/or fire.**

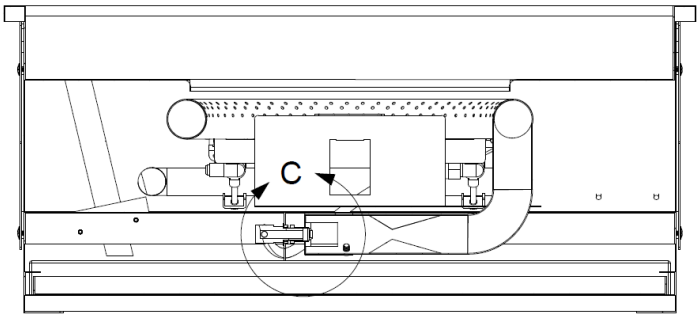

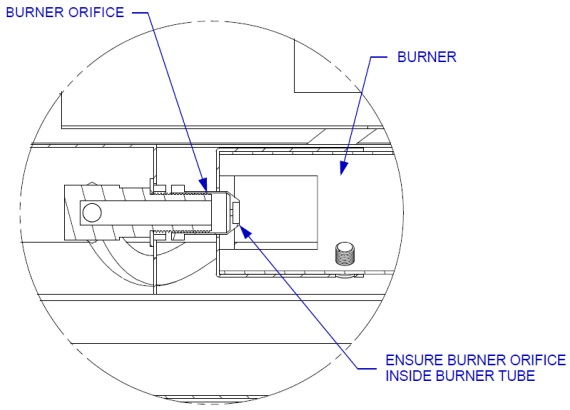

Detail C

INSPECTING / CLEANING BURNER AND GAS ORIFICES (CONT.)

IGNITER / ELECTRODE CHECK

With all control knobs set to “OFF”, check each igniter individually for presence of spark at electrode. In turn, push each control knob in fully and turn slowly about a 1/4 turn to the left (counter-clockwise) until a click is heard; the trigger hitting the strike block should produce a blue spark at the electrode tip. Return control knob to “OFF” before checking next igniter.

BURNER OPERATION CHECK

NOTE: Upon first assembly the gas lines and burner will be full of air. In order for the burner to light properly, the lines must fill with gas. It may require several attempts at lighting the burner before you are successful.

1. With power burner control knobs in “OFF” position, turn on the Gas supply.
2. Light any burner by pushing its control knob in fully and slowly (3 to 4 seconds) turning it about 1/4 turn to the left (counter-clockwise) until a click is heard. The 3 to 4 second duration should provide enough gas to light the burner. If the burner does not light, immediately return the control knob to “OFF”, wait several minutes for the gas to disperse, and repeat the process. After burner lights successfully, turn control knob to “OFF”.
3. Repeat process for the next control knob/igniter, ensuring that the other knob is in “OFF” position as you perform the check.
4. If any burners fail to light after several attempts, discontinue gas supply at source and re-inspect for obstructions to gas flow and orifices.

NOW YOUR POWER BURNER IS READY TO USE!

Before first use and at the beginning of each season:

1. Please read Safety, Lighting and Operating Instructions carefully.
2. Check gas orifices, burner tube and burner ports for any obstructions.
3. PERFORM GAS LEAK CHECK – REFER TO **PAGE 2**.

LIGHTING & OPERATING INSTRUCTIONS

LIGHTING PROCEDURES

Lighting Burner(s):

1. Become familiar with the safety guidelines at the front of the manual. **DO NOT SMOKE WHILE LIGHTING POWER BURNER OR CHECKING GAS SUPPLY CONNECTIONS!**
2. If your power burner fuel source is a LP gas cylinder, check to see that the cylinder is filled.
3. Check that the end of the burner tube is properly located over the burner orifice and the ventri tube cap and brass cap are properly seated on the ventri tube.
4. Make sure all gas connections are securely tightened. **TEST FOR LEAKS WITH A SOAP SOLUTION, NEVER WITH A FLAME**. (Gas Leak Check instructions are on page 2).
5. Always remove lid before lighting.
6. Set ALL power burner control knobs to "OFF" and open gas supply, LP cylinder or Natural Gas Valve.
7. Ignite only the burners you intend to use, using the same method for each: Push in control knob completely and rotate slowly (3 to 4 seconds) about 1/4 turn to the left (counter clockwise) until a click is heard. The 3 to 4 second duration should provide enough gas to light the burner. If the burner does not light, immediately return the control knob to 'OFF', wait several minutes for the gas to disperse, and repeat the process. After burner ignites, repeat procedure if the other burner is needed.
8. Adjust control knob(s) to desired cooking temperature.

NOTE: If igniters fail to produce a spark at the electrode tip, burners can be manually lit with a fireplace-type match.

NOTE: **To light power burner with a fireplace-type match**, follow steps 1 through 6 above. Remove grates. Insert lighted fireplace-type match or long-necked butane lighter placing flame near to burner ports. Press in control knob and rotate left to "HIGH" setting to release gas. Burner should light immediately. If more than one burner is needed, repeat procedure with the other burner. Replace grates. Adjust burner(s) to desired cooking temperature.

OPERATING PROCEDURE

Burn-off: Before cooking on your power burner for the first time, burn the power burner to get rid it of any odors or foreign matter by igniting the burners and operating at "HIGH" setting for about five minutes. You may then either set the controls to "OFF" or cook on your power burner immediately by turning the control knobs to a lower setting.

This power burner has been certified with a pot size of 60 qt in total volume, 15 1/2" in height and 18" in diameter.

CAUTION: DO NOT LEAVE POWER BURNER UNATTENDED WHILE IN USE.

CAUTION: If burners go out during operation, close gas supply at source, and turn all gas valves off. Wait five minutes before attempting to re-light (this allows accumulated gas fumes to clear).

CAUTION: Should a grease fire occur, close gas supply at source, turn off all burners and leave lid off until fire is out. Do not use water or any liquid to extinguish a grease fire.

CAUTION: Do not attempt to disconnect any gas fitting while your power burner is in operation or while gas feed is on.

CLEANING & MAINTENANCE

CLEANING THE GRATES

After cooking, turn control knobs to "OFF" and let power burner cool before attempting to clean your grates. Before first use and periodically it is suggested that you wash the grates in a mild soap and warm water solution. You can use a washcloth or a vegetable brush to clean your grates.

CLEANING THE BURNER

IMPORTANT: Gas control knobs should be in the "OFF" position, and fuel line should be disconnected from gas valve manifold. To reduce the chance of FLASHBACK, the procedure below should be followed at least once a month or when your power burner has not been used for an extended period of time.

1. Remove burner from insert.
2. Clean any clogged ports with a stiff wire such as an open paper clip.
3. Inspect the burner for damage (cracks or holes) and if such damage is found, order and install a new burner.
4. After installation, check to insure that the burner orifice is correctly placed inside the burner tube. Also check position of spark electrode.

CLEANING THE GREASE TRAY

The grease tray should be emptied and wiped down periodically and washed in a mild detergent and warm water solution.

ANNUAL CLEANING OF POWER BURNER

Periodically, the power burner should be given an entire thorough cleaning to ensure optimal performance.

1. Shut off gas supply at source and disconnect fuel line from gas valve manifold. Protect fuel line fitting.
2. Remove and clean (as explained above) the grates and burner.
3. Cover the orifices with a piece of aluminum foil.
4. Brush the inside and bottom of the power burner with a vegetable brush, and wash down with a mild soap and warm water solution. Rinse thoroughly and let dry.
5. Remove aluminum foil from orifices and check orifices for obstruction.
6. Check electrode as instructed on page 11.
7. Replace burner and grates.
8. Reconnect to gas source and observe burner flame for correct operation.

IMPORTANT: You should NOT line the bottom of the power burner housing with aluminum foil, sand or any other grease absorbent substance. Grease will not be able to drip down into the grease tray and a grease fire could occur.

STAINLESS STEEL CLEANING AND MAINTENANCE

Stainless steel is a corrosion resistant chromium/nickel alloy steel that is both durable as well as strong with an outstanding luster. The goal of your cleaning and maintenance routine should be to keep the stainless steel's protective chromium oxide layer intact. This is what prevents corrosion. Contrary to popular belief, stainless steel is NOT rustproof, especially in the environment of a swimming pool. Chlorine, bromine, some fertilizers and other elements are extremely caustic chemicals for stainless steel. These chemicals combined with heat and humidity greatly increase the corrosiveness of these chemicals. Regular cleaning is the best way to prevent corrosion and add years of enjoyment to your Bull stainless steel products.

TROUBLESHOOTING

IF POWER BURNER FAILS TO OPERATE PROPERLY

1. Turn off gas at source, turn control knobs to “OFF”, and wait five minutes before trying again.
2. Check gas supply/connections.
3. Repeat lighting procedure.

If power burner still fails to operate properly, **TURN “OFF” GAS AT SOURCE, TURN CONTROL KNOBS TO “OFF”**, wait for power burner to cool, and check the following:

a. **Misalignment of burner tube over orifice**
CORRECTION: Reposition burner tube to properly seat over orifice.

b. **Obstruction in gas line**
CORRECTION: Remove fuel line from power burner. DO NOT SMOKE! Open gas supply for one second to blow any obstruction from fuel line. Close off gas supply at source and reconnect fuel line to power burner.

c. **Plugged orifice**
CORRECTION: Remove grates, burner and grease tray. Gently clear any obstruction in orifices with a fine wire. Reinstall burner over orifice, replace grates and grease tray. If an obstruction is suspected in gas valve(s) or gas valve bracket, please contact your power burner dealer or gas appliance service person for assistance.

d. **Misalignment of igniter on burner**
CORRECTION: Check for proper position of electrode tips. The tips of the electrode should be pointing forward toward the front and free from grease for spark discharging. The ignition wires should be firmly connected to the valve ignitions and electrodes. Replace the ignition wires if they are broken or cracked. With gas supply closed and all control knobs set to “OFF”, check each positive igniter individually for presence of spark at electrode. In turn, push each control knob in fully and rotate about 1/4 turn to the left (counter-clockwise) until click is heard; the trigger hitting the strike block should produce a blue spark at the electrode tip. Return control knob to “OFF” before checking next igniter.

If re-ignition is necessary
While the power burner is still hot, you must wait for a minimum of five minutes before commencing to re-ignite (this allows accumulated gas fumes to clear). If all checks/corrections have been made and power burner still fails to operate properly, consult your power burner dealer or gas appliance service person.

YELLOW FLAME

Once the entire burner is operating, check the flame color to be sure it is mostly blue (some yellow color will be present because of impurities in the fuel).

FLASH BACK

When fire occurs in and around the burner tube, immediately turn off gas at its source and turn the control knob(s) to “OFF”. Wait until the power burner has cooled, then clean the burner tube and burner ports as described on page 9.

PARTS LIST

MODEL #96000 POWER BURNER, L.P. (PROPANE)
MODEL #96001 POWER BURNER, N.G. (NATURAL GAS)

REF #	PARTS #	DESCRIPTION	QTY	WARRANTY PERIOD
1	96100	INSERT ASSEMBLY	1	Lifetime
2	96101	LID	1	1 yr
3	96102	GREASE TRAY	1	1 yr
4	96103	CONTROL PANEL	1	1 yr
5	16501	BEZEL - MAIN BURNER	2	1 yr
6	16505	KNOB - MAIN BURNER	2	1 yr
7	96104	GRATE - INNER	1	Lifetime
8	96105	GRATE - OUTER	1	Lifetime
9	96106	GAS VALVE	2	1 yr
10	96107	MANIFOLD	1	3 yrs
11	96108	STAINLESS FLEX TUBE 16"	2	1 yr
12	96109	IGNITION WIRE	2	1 yr
13	96110	BURNER	1	3 yrs
14	96113	BRASS CAP	1	1 yr
15	96114	VENTRI TUBE BRASS FITTING	1	1 yr
16	96121(LP) / 96122(NG)	VENTRI TUBE ORIFICE	1	1 yr
17	96115	HEAT SHIELD	1	1 yr
18	96116	BURNER IGNITOR	1	1 yr
19	95007	ORIFICE ADAPTER	1	1 yr
20	96123(LP) / 96124(NG)	BURNER ORIFICE	1	1 yr
21	16508	REGULATOR - LIQUID PROPANE MODEL ONLY	1	1 yr
22	96117	REGULATOR - NATURAL GAS MODEL ONLY	1	1 yr
23	96118	REGULATOR ADAPTER - LIQUID PROPANE MODEL ONLY	1	1 yr
24	96119	REGULATOR ADAPTER - NATURAL GAS MODEL ONLY	1	1 yr
25	96120	GREASE CATCH	1	1 yr

HOW TO ORDER REPLACEMENT PARTS

Please refer to the parts list on this page.

To make sure you obtain the correct replacement parts for your power burner, the following information is required to assure getting the correct part.

1. Power burner model number (see data sticker on power burner) and type of gas hook up.
2. Reference number of replacement part needed.
3. Description of replacement part needed.
4. Quantity of parts needed.

IMPORTANT: Use only factory authorized parts. The use of any part that is not factory authorized can be dangerous. This will also void your warranty.

IMPORTANT: Keep this assembly and operating instruction manual for referral, and for replacement parts ordering.

CAUTION: Gas valves are preset at the factory. If you wish to convert at some later date, be sure to contact your gas supplier or power burner dealer before making the conversion.

CAUTION: A different gas valve must be installed when converting from one type of gas to another. You will also need a data plate indicating what type of gas the power burner uses.

EXPLODED ILLUSTRATION

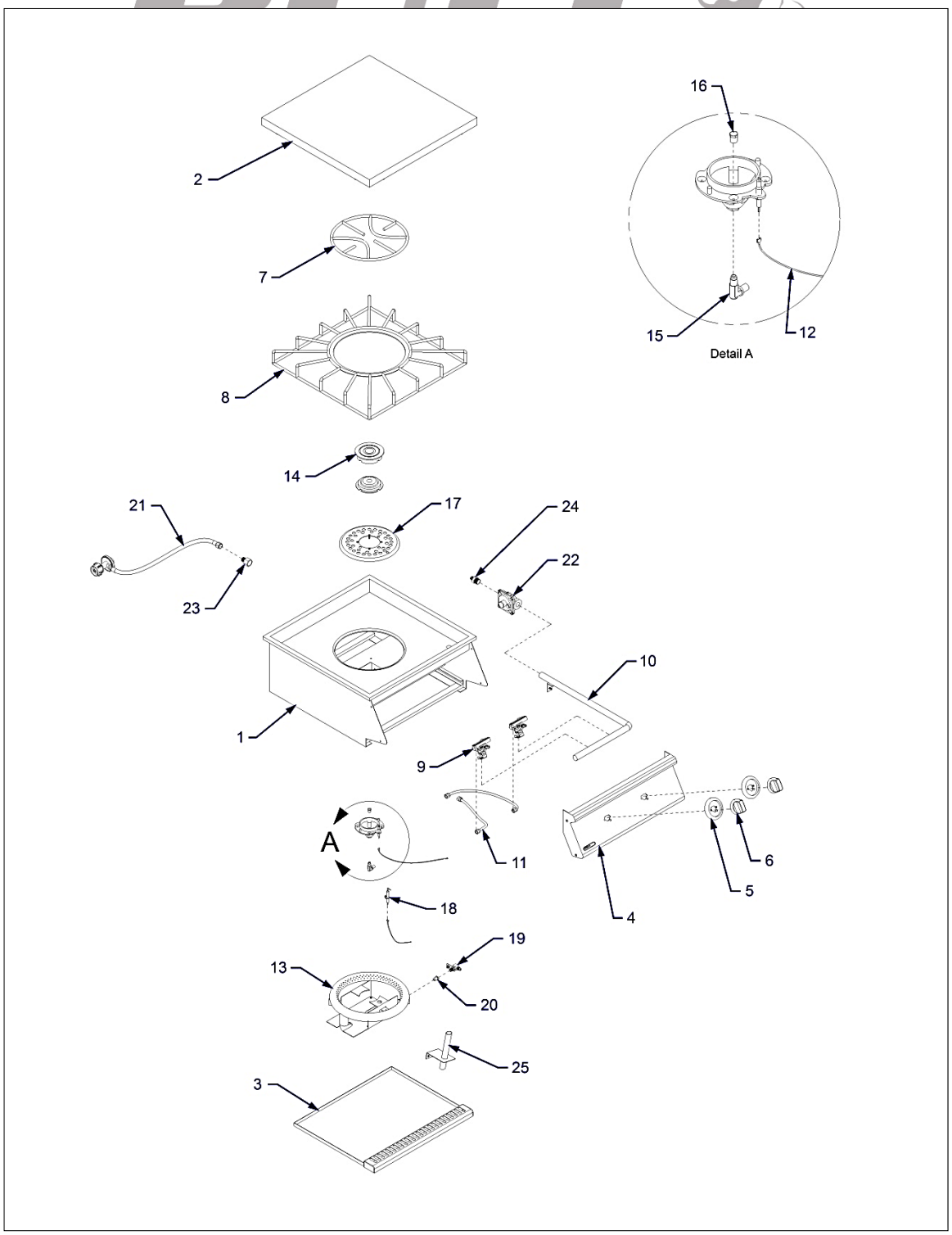

LIMITED WARRANTY

REGISTERING YOUR POWER BURNER

In order to validate your Bull Limited Warranty, you must complete the Warranty Registration Card within 90 days from the Proof of Purchase. You may register your unit either online at www.bullbbq.com or by sending in the completed hard copy along with a copy of the Proof of Purchase to:

Product Registration
Bull Outdoor Products
2483 W Walnut Ave
Rialto, CA 92376

Bull Outdoor Products, Inc. warrants to the original purchaser at the original site of delivery with proof of purchase of each Outdoor Power Burner that when subject to normal residential use, it is free from defects in workmanship and materials for the periods specified below. This warranty excludes power burners used in rental or commercial applications. It does not apply to rust, corrosion, oxidation or discoloration, which may occur due to moisture or overheating, unless the affected component becomes inoperable. It does not cover labor or labor related charges. There will be a shipping and handling charge for the delivery of the warranty part(s).

Our obligation under this warranty is limited to repair or replacement, at our option, of the product during the warranty period. The extent of any liability of Bull Outdoor Products, Inc., under this warranty is limited to repair or replacement. This warranty does not cover normal wear of parts, damage resulting from any of the following: negligent use or misuse of the product, use on improper fuel/gas supply, use contrary to operating instructions, or alteration by any person other than our factory service center. The warranty period is not extended by such repair or replacement.

Warranty claim procedure: If you require service or parts for your Bull power burner or if you have any questions about warranty, please contact our Warranty Service Center for factory direct assistance. Our hours of operation are 5AM to 5PM PST. Our phone number is **(800) 521-2855** and our FAX number is **(909) 770-8627.**

Product repair as provided under this warranty is your exclusive remedy. Bull Outdoor Products, Inc. shall not be liable for any incidental or consequential damages for breach of any express or implied warranty on its products. Except to the extent prohibited by applicable law, any implied warranty or merchantability or fitness for a particular purpose on this product to the duration of the above warranty. Some states do not allow the exclusion or limitation of incidental or consequential damages, or allow limitations on how long an implied warranty lasts, so the above limitations or exclusions may not apply to you. This warranty gives you specific legal rights, and you may have other rights, which vary from state to state.

***Model Number*_____**

***Serial Number*_____**

***Date of Purchase*_____**

****Attach a copy of your receipt or invoice here****