This Owner's Manual is provided and hosted by Appliance Factory Parts.

Appliance Factory Parts
Experts in BBQ, Humidifier, & Appliance Parts
1-800-955-7075

Napoleon GDS26N-1 Owner's Manual

Shop genuine replacement parts for Napoleon GDS26N-1

Find Your Napoleon Fireplace Parts - Select From 171 Models

-------- Manual continues below --------

CASTLEMORE™ DIRECT VENT GAS STOVE

Specifications

Model	BTU	Width	Height	Depth	Glass
GDS26	25,000	23 5/8	37	20 5/8	24 X 16 5/8

Overview

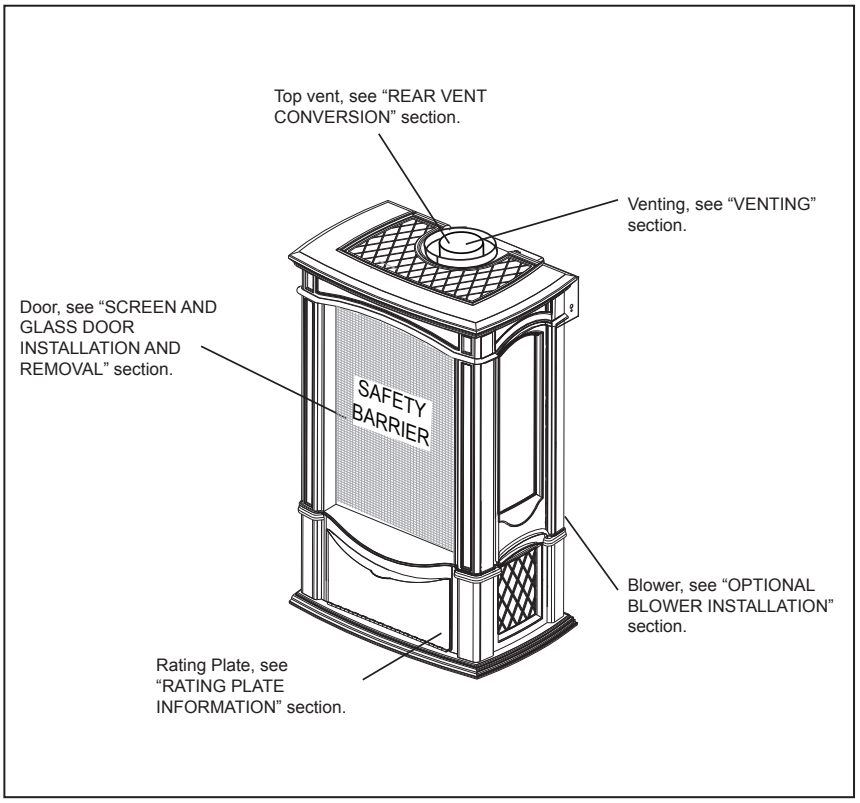

Dimensions

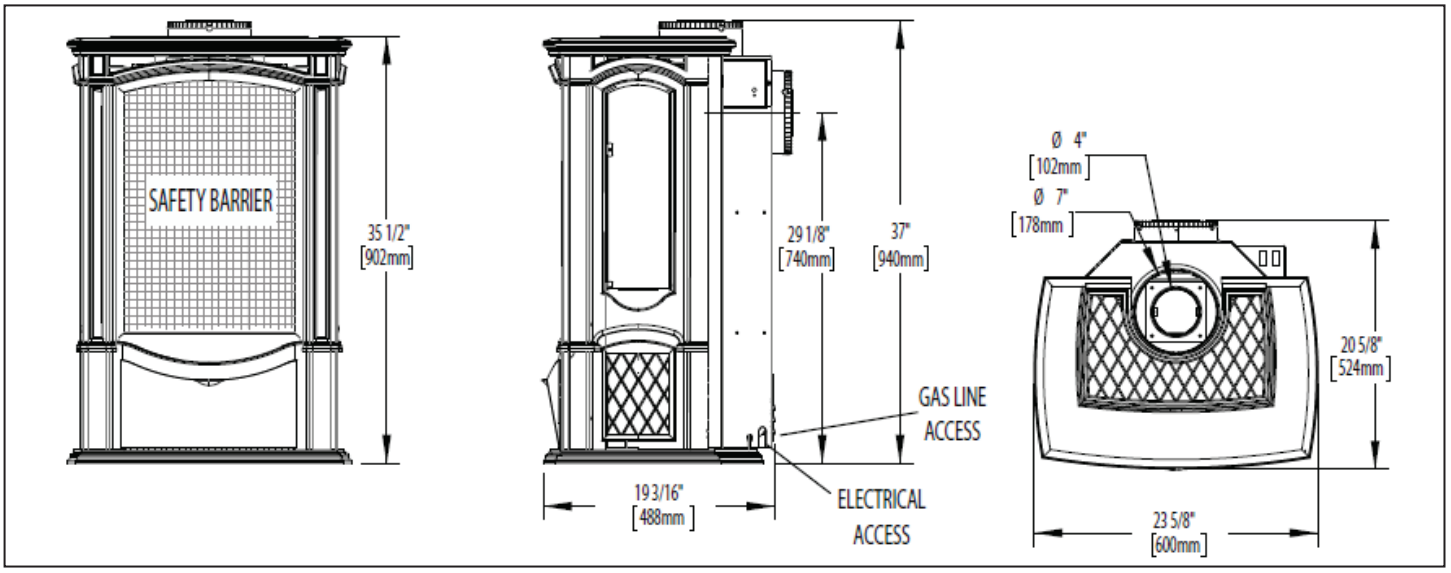

05/2015

24 Napoleon Road, Barrie, Ontario, Canada L4M 0G8 • 214 Bayview Drive, Barrie, Ontario, Canada L4N 4Y8
Fireplaces, Heating and Cooling: 705-721-1212 • Grills: 705 726-4278 • napoleonproducts.com

CASTLEMORE™ DIRECT VENT GAS STOVE

Clearances

Minimum Clearance To Combustibles

Minimum clearance to combustible construction from appliance and vent surfaces:

A - 2" (51mm)
B - 5" (127mm)
C - 2" (51mm)

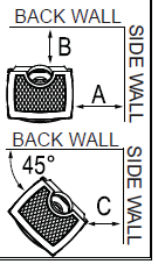

Combustible Framing:
- 1" (25mm) to bottom and sides of the vent pipe*
- 2" (51mm) to top of the vent pipe*

NOTE: Appliance should not be installed directly on carpeting.

Rear Exit:
- 47 1/2" (1207mm) to ceiling from base of the appliance

Top Exit:
- 51" (1295mm) to ceiling from base of the appliance**

*** HORIZONTAL VENT SECTIONS:**

A minimum clearance of 1" (25mm) at the bottom and sides and 2" (51mm) at the top of the vent pipe in all horizontal runs to combustibles is required. Use firestop spacer W010-1313 and shield W585-0240 (supplied).

*** VERTICAL VENT SECTIONS:**

A minimum of 1" (25mm) all around the vent pipe on all vertical runs to combustibles is required. Use firestop spacer W010-1313 (supplied).

** For top vent vertical termination, see "REAR EXIT" for specific clearances.

At a distance of 2" (51mm) from the wall, installation or service to the blower may not be practical. A minimum of 5" (127mm) will be required in order to install or service the blower.

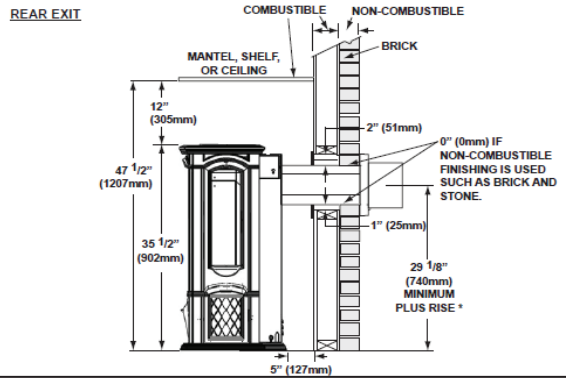

Vent Flow Chart

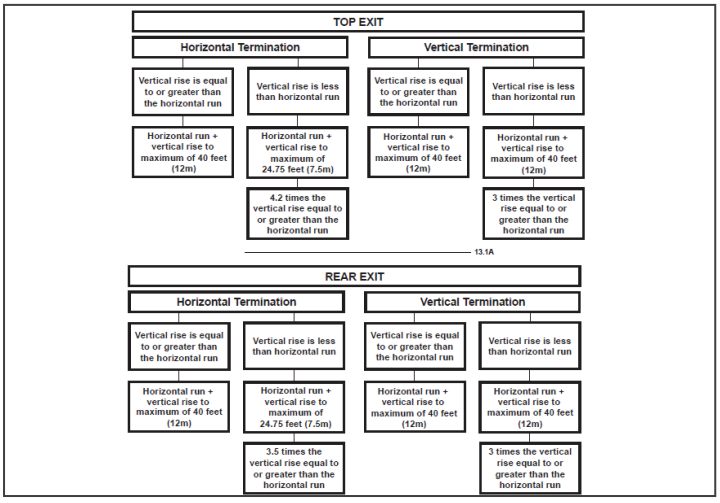

Product information provided is not complete and is subject to change without notice. Please consult the installation manual for the most up to date installation information.

Minimum Vertical Vent Rise

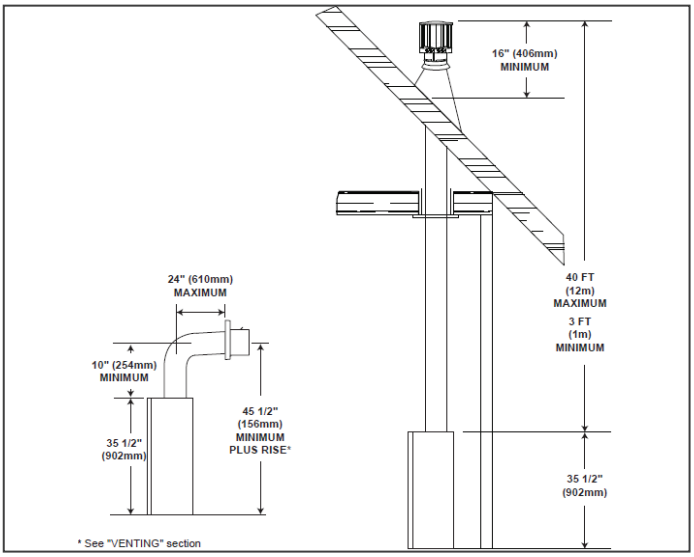

Minimum Air Terminal Location Clearances

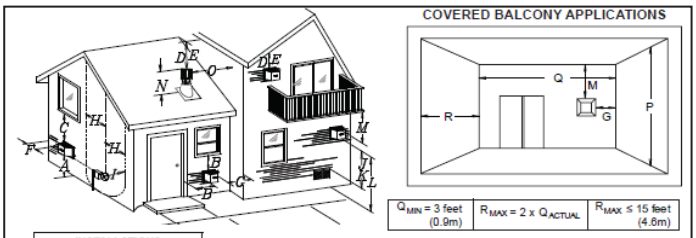

	INSTALLATIONS		
	CANADA	U.S.A.	
A	12" (304.8mm)	12" (304.8mm)	Clearance above grade, veranda porch, deck or balcony.
B	12" (304.8mm) Δ	9" (228.6mm)Δ	Clearance to windows or doors that open.
C	12" (304.8mm)*	12" (304.8mm)*	Clearance to permanently closed windows.
D	18" (457.2mm)**	18" (457.2mm)**	Vertical clearance to ventilated soffits located above the terminal within a horizontal distance of 2' (50.8mm) from the centerline of the terminal.
E	18" (457.2mm)**	18" (457.2mm)**	Clearance to unventilated soffit.
F	0" (0mm)	0" (0mm)	Clearance to an outside corner wall.
G	0" (0mm)***	0" (0mm)***	Clearance to an inside non-combustible corner wall or protruding non-combustible obstructions (chimney, etc.).
	2" (50.8mm)***	2" (50.8mm)***	Clearance to an inside combustible corner wall or protruding combustible obstructions (vent chase, etc.).
H	3' (0.9m)	3' (0.9m)****	Clearance to each side of the centerline extended above the meter / regulator assembly to a maximum vertical distance of 15' (4.6m).
I	3' (0.9m)	3' (0.9m) ****	Clearance to a service regulator vent outlet.
J	12" (304.8mm)	9" (228.6mm)	Clearance to a non-mechanical air supply inlet to the building or a combustion air inlet to any other appliance.
K	6' (1.8m)	3' (0.9m) †	Clearance to a mechanical air supply inlet.
L	7' (2.1m) ‡	7' (2.1m) ****	Clearance above a paved sidewalk or paved driveway located on public property.
M	12" (304.8mm)††	12" (304.8mm)****	Clearance under a veranda, porch, deck or balcony.
N	16" (406.4mm)	16" (406.4mm)	Clearance above the roof.
O	2' (0.6m)†*	2' (0.6m)†*	Clearance from an adjacent wall including neighbouring buildings.
P	8' (2.4m)	8' (2.4m)	Roof must be non-combustible without openings.
Q	3' (0.9m)	3' (0.9m)	See chart for wider wall dimensions.
R	6' (1.8m)	6' (1.8m)	See chart for deeper wall dimensions. The terminal shall not be installed on any wall that has an opening between the terminal and the open side of the structure.

Δ in a structure with three walls and a roof, the terminal shall not be located less than 6 feet (1.8m) under a window that opens on a horizontal plane.
* Recommended to prevent condensation on windows and thermal breakage
** It is recommended to use a heat shield and to maximize the distance to vinyl clad soffits.
*** The periscope requires a minimum 18" (457.2mm) clearance from an inside corner. This is a recommended distance. For additional requirements check local codes.
† 3 feet above if within 10 feet (3.1m) horizontally.
‡ A vent shall not terminate where it may cause hazardous frost or ice accumulations on adjacent property surfaces.
†† Permitted only if the veranda, porch, or deck is fully open on a minimum of two sides beneath the floor.
†* Recommended to prevent recirculation of exhaust products. For additional requirements check local codes.

NOTE: Clearances are in accordance with local installation codes and the requirements of the gas supplier.

05/2015

24 Napoleon Road, Barrie, Ontario, Canada L4M 0G8 • 214 Bayview Drive, Barrie, Ontario, Canada L4N 4Y8
Fireplaces, Heating and Cooling: 705-721-1212 • Grills: 705 726-4278 • napoleonproducts.com