This Owner's Manual is provided and hosted by Appliance Factory Parts.

Appliance Factory Parts
Experts in BBQ, Humidifier, & Appliance Parts
1-800-955-7075

Napoleon EPI3C-1 Owner's Manual

Shop genuine replacement parts for Napoleon EPI3C-1

Find Your Napoleon Fireplace Parts - Select From 171 Models

-------- Manual continues below --------

NAPOLEON

WOOD BURNING STOVES AND INSERTS

WOOD BURNING STOVES AND INSERTS

napoleon.com

Innovative features for incomparable heating quality.

Wood Burning Stoves

S20 ..... 4 - 5

S25 ..... 6 - 7

Wood Burning Inserts

S20i & S25i 8- 9

Oakdale™ EPI3C & EPI13T ..... 10 - 11

Outstanding Features of Napoleon's Advanced Technology 12

Napoleon's EPA Technology 13

Detailed Specifications ..... 14 - 15

S20i shown with backer plate.

Cover Photo - The Oakdale™ Traditional front shown in painted black finish.

FIND YOUR HAPPY (fire)PLACE.

Throughout the ages, people have gathered around fires to share in life's greatest

There's just something about the glow of flickering flames that makes special mom

A Napoleon fireplace is uniquely designed to brighten the vibe of any room in your
an incredible range of designer options to fit any vision.

A fire not only raises the warmth and ambiance of a room, it can raise the value of
offers some of the highest returns of any remodeling project. And that should make

And so you can keep enjoying that positive glow for years and years and years to
fireplace is backed by the President's Limited Lifetime Warranty.

S-Series - S20

Heating up to 1,800 sq. ft.

The S20 wood burning stove is the smallest of the efficient burning stove lineup, offers the best of Napoleon's wood burning technology and is EPA certified. A heavy-duty firebox top and full-width ash lip to protect your floor from debris, while a large ash pan with easy glide rollers ensures cleanup is effortless. Clean and contemporary lines allow this wood burning stove to blend into your current décor while remaining highly efficient.

S20
Up to 65,000 BTU's
26" w x 34 1/4" h x 28 3/8" d
EPA Certified

For more detailed specifications on these units, see page 14

S20 - Contemporary small-sized wood stove complete with cast door, cast ash lip and cast pedestal base

Features

Hidden Door Hinges

Large Viewing Area

Reduced Clearance Heat Shield (Optional)

"Easy Glide" Ash Drawer & Removable Ash Pan

Blower Kit (Optional)

S-Series - S25

Heating up to 2,100 sq. ft.

The S25 wood burning stove is clean and contemporary looking and features EPA 2020 certified wood burning technology. Extremely long burn times ensure you can watch the fire for pleasure instead of babysitting the fire for reloading. A heavy-duty firebox top and full-width ash lip to protect your floor from debris, while a large ash pan with easy glide rollers ensures cleanup is effortless. Clean and contemporary lines allow this wood burning stove to blend into your current décor while remaining highly efficient.

S25
Up to 70,000 BTU's
28 3/4" w x 37 1/2" h x 30 7/8" d
EPA Certified

For more detailed specifications on these units, see page 14

S25 - Contemporary medium-sized wood stove complete with cast door, cast ash lip and cast pedestal base

Features

Hidden Door Hinges

Large Viewing Area

Reduced Clearance Heat Shield
(Comes installed on Stove)

"Easy Glide" Ash Drawer &
Removable Ash Pan

Blower Kit (Optional)

S-Series Wood Burning Inserts

S20i & S25i

The S-Series wood burning fireplace inserts are clean and contemporary looking. Featuring EPA 2020 certified wood burning technology and extremely long burn times. The extra-large viewing area ensures that you can watch the fire for pleasure instead of babysitting the fire for reloading. An included dual blower system quietly circulates heat throughout your room. Clean and contemporary lines allow this wood burning fireplace insert to blend into your current décor while remaining highly efficient.

S20i
Up to 65,000 BTU's
Unit size 25 3/8" w x 21 3/4" h x 22 7/16" d
With backerplate 41" w x 30" h
Heating up to 1800 sq. ft.
EPA Certified

S25i
Up to 70,000 BTU's
Unit size 28 3/4" w x 23 1/6" h x 26 1/8" d
With standard backerplate 41" w x 30" h
With large backerplate 48" w x 33" h
Heating up to 2100 sq. ft.
EPA Certified

For more detailed specifications on these units, see page 14

Options & Accessories

Large Viewing Area

Hidden Door Hinges

Blower Kit (Included)

Oakdale™ Traditional & Contemporary

Heating up to 1,500 sq. ft.

A wood burning insert that will match any décor whether it be traditional or contemporary. The Oakdale™ Traditional has a flush front with a cast iron surround and the Oakdale™ Contemporary has a contemporary flush front with a cast iron surround. Four stainless steel secondary air tubes supercharge the fuel burning process and generate a beautiful display of **YELLOW DANCING FLAMES**®. Complete with a removable log retainer and a heat circulating blower, these inserts are perfect heating solutions for your home or cottage.

Oakdale™ Contemporary
EPI3C
Up to 55,000 BTU's
42½"w x 29½"h as shown
EPA Certified

Oakdale™ Traditional
EPI3T
Up to 55,000 BTU's
42½"w x 28½"h as shown
EPA Certified

For more detailed specifications on these units, see page 15

The Oakdale™ Contemporary shown with painted black remo

Options & Accessories

WHISPER QUIET™ Heat Circulating Blower System (included)

Removable Log Retainer Painted Black Finish (included)

Oakdale™ Traditional Front Painted Black Finish

Oakdale™ Traditional Front Porcelain Enamel Majolica Finish

Oakdale™ Contemporary Front Painted Black Finish

The Oakdale™ Traditional shown in porcelain enamel Majoli

Outstanding Features

of Napoleon's Advanced Technology

Help Protect the Environment with a Napoleon Wood Burning Stove or Insert

Heating your home with a Napoleon high efficiency, EPA (Environmental Protection Agency) approved fireplace, stove or insert releases no more carbon dioxide than a dying tree would lying on the forest floor. In fact, when the entire carbon cycle is considered, a Napoleon EPA approved stove or insert heats your home more efficiently and with less impact on the environment than any other heating fuel option.

Dual Vortex™ Action

To achieve an extraordinary clean burn without a catalytic combustor, horizontal jets of super heated secondary air are mixed with the fire's smoke to burn off released smoke particles. You can watch the spirals of secondary flames just below the top baffle during most of the burn.

Vortex™ Baffle - Lifetime Warranty*

Manufactured from high density material, Napoleon's exclusive Vortex™ baffle provides an unprecedented level of durability while ensuring complete combustion resulting in a clean burning, environmentally friendly wood burning stove.

*See dealer for details

Secondary

Napoleon's s
fiber and pro
combustion. T
concentrating
heat your hor

WHISPER C

The extreme
Napoleon's su
"whole home"

Napoleon's EPA Technology

Wood Burning Stoves

1. Economical 6" flue on even the largest models, assures you of efficiency and cost saving installations
2. Primary "bottom air feed" assists in cold startups and to revive a small, dying fire
3. Secondary air tube insulated for complete combustion
4. Wrap around side shields add a delicate balance of elegance and functional practicality helping to disperse heat evenly and reduce clearances to combustibles
5. Large viewing area through an elegantly arched cast iron door
6. High heat ceramic glass provides a safe, unobstructed view of the fire
7. Effective air wash in combination with high temperatures keeps the viewing glass clean
8. Fully refractory lined firebox, like a kiln, maintains the interior temperatures necessary to achieve low emissions
9. Ash dump with self-closing door is readily accessible (pedestal and cast iron models)
10. Large "king size" functional ash pan (600 cubic inch capacity) with two carrying handles lets you conveniently dispose of ashes (included with pedestal and optional for leg models)
11. Folding ash pan lid allows for clean, no-mess ash removal (pedestal models)
12. Cool room air is circulated around the firebox, heated and returned to the room
13. The single lever burn control regulates primary and secondary air establishing a perfect mix and a clean burn

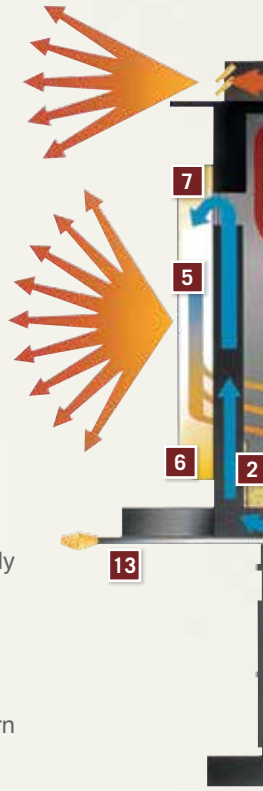

Napoleon's EPA Wood Burning Technology... more heat with less fuel. Emissions as low as 1.3 grams per hour and 72.1% overall maximum heating efficiency.

Wood Burning Inserts

1. Radiant Heat
2. High heat ceramic glass provides a safe, unobstructed view of the fire
3. Heavy duty secondary air tubes introduce just the right amount of air to increase efficiency through complete combustion (specific for the EPI3C, EPI3T and EPI3TN)
4. Cool room air is circulated around the firebox with help from circulation blower, heated and returned to the room
5. Combustion air is brought into the unit through the fresh air intake collar located on the top left outer shell
6. Combustion takes place inside the firebox, smoke and gases are moved around a baffle system into a second chamber for complete combustion and extended flame path and exhaust out the chimney
7. Primary "bottom air feed" assists in cold startups and to revive a small, dying fire
8. A single air control regulates the burn rate

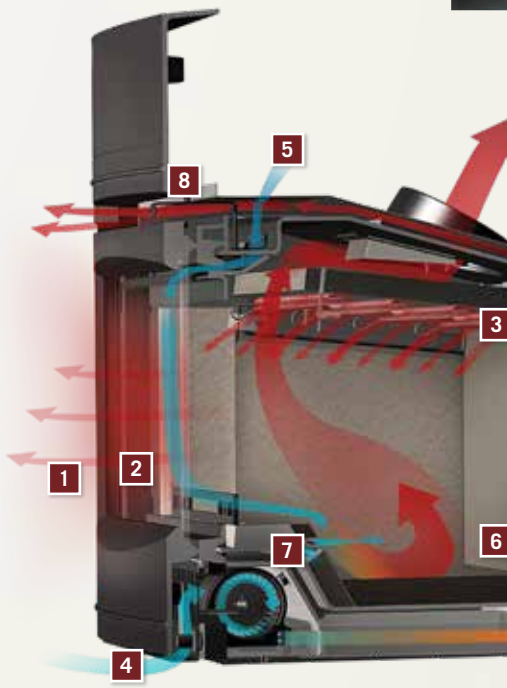

S20-1

Shown on pages 4 & 5

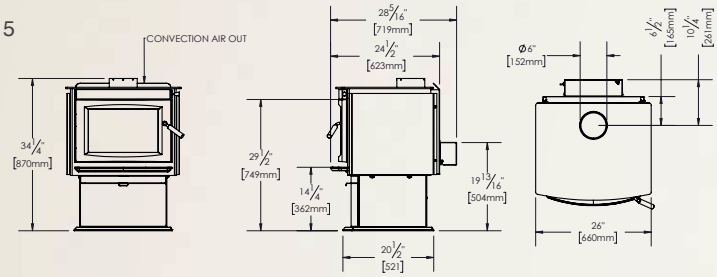

S25

Shown on pages 6 & 7

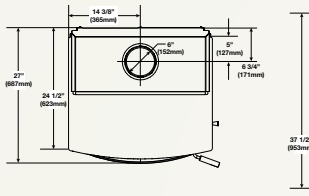

Model	BTU Heat Output*	BTU Heat Output (High Burn) **	Firebox Capacity (cu. ft.)	Area Heated (sq. ft.)***	Burn Time (Hours)	Log Size (Max)	Emissions (Grams Per Hour)	Flue Diameter		Catalytic Combustor	Mobile Home Approved	Blower Kit Available
								Top	Rear			
S20-1	12,944 - 54,127	65,000	1.9	800 - 1800	8 hrs	16"	2.25	6"	N/A	No	Yes	Optional
S25	19,195 - 54,057	70,000	2.5	Up to 2100	16 hrs	23"	1.3	6"	N/A	No	No	Optional

If the stove is to be installed on a combustible floor, it must be placed on an approved non-combustible hearth pad, that extends 8" (200mm) beyond the stove sides and back, and 18" (455mm) to the front. Clearances can be reduced with shielding acceptable to local authorities.

S20i

Shown on pages 8 & 9

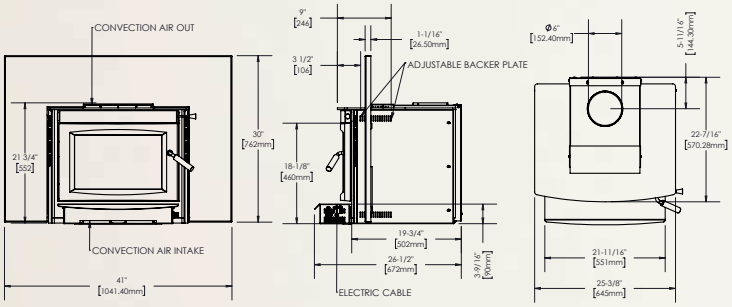

S25i

Shown on pages 8 & 9

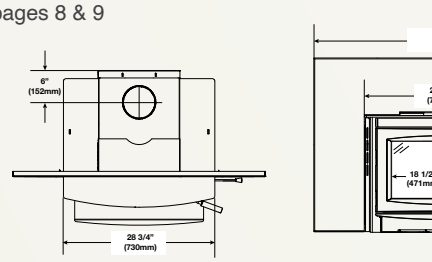

Model	BTU Heat Output*	BTU Heat Output (High Burn) **	Firebox Capacity (cu. ft.)	Area Heated (sq. ft.)***	Burn Time (Hours)	Log Size (Max)	Emissions (Grams Per Hour)	Efficiency		Mobile Home Approved	Blower Kit Available
								LHV	HHV		
S20i	12,944 - 54,127	65,000	1.9	800 - 1800	8 hrs	16"	2.25	77.54%	72.06%	No	Optional
S25i	19,195 - 54,057	70,000	2.5	Up to 2100	16 hrs	23"	1.3	76.99%	71.56%	No	Optional

Model	Installation	W
S20i	Minimum Fireplace Opening	25
S25i	Minimum Fireplace Opening	

This insert must be installed only into a solid fuel burning fireplace that is at least 18" (457.2mm) deep, 27" (685.8mm) wide and 22" (558.8mm) high with an approved lined chimney at least 15 feet high (4.6m) and a hearth of 18" (457.2mm) for Canada and 16" (406.4mm) for

* Rated BTU/h with softwood test fuel (for emissions only) - no refueling

** Wolf Steel Ltd. own test results showing realistic BTU's using hardwood logs with regular refueling. Heat output will differ on chimney draft as well as type, moisture content and size of wood.

*** Figures may vary with individual conditions such as floor plan layout, insulation value/heat loss of the house, geographical location and firewood used.

Oakdale™ Contemporary

Shown on pages 10 & 11

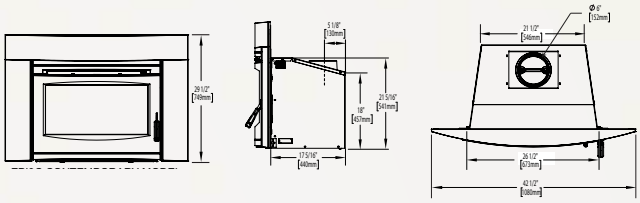

Oakdale™ Traditional

Shown on pages 10 & 11

Model	BTU Heat Output*	BTU Heat Output (High Burn) **	Firebox Capacity (cu. ft.)	Area Heated (sq. ft.)***	Burn Time (Hours)	Log Size (Max)	Emissions (Grams Per Hour)	Flue Diameter		Catalytic Combustor	Mobile Home Approved	Blower Kit Available
								Top	Rear			
EPI3C	14,492 - 47,887	55,000	1.8	1,500	8 hrs	18"	1.21	6"	N/A	No	No	Included
EPI3T	14,492 - 47,887	55,000	1.8	1,500	8 hrs	18"	1.21	6"	N/A	No	No	Included

Installation	V
Minimum Fireplace Opening	
Minimum Fireplace Opening	

This insert must be installed only into a solid fuel burning fireplace that is at least 18" (457.2mm) deep, 27" (685.8mm) wide and 22" (558.8mm) high with an approved lined chimney at least 15 feet high (4.6m) and a hearth of 18" (457.2mm) for Canada and 16" (406.4mm) for

* Rated BTU/h with softwood test fuel (for emissions only) - no refueling.

** Wolf Steel Ltd. own test results showing realistic BTU's using hardwood logs with regular refueling. Heat output will differ on chimney draft as well as type, moisture content and size of wood.

*** Figures may vary with individual conditions such as floor plan layout, insulation value/heat loss of the house, geographical location and firewood used.

NAPOLEON

CELEBRATING OVER 40 YEARS OF HOME COMFORT PRODUCTS

Authorized Dealer

24 Napoleon Road, Barrie, Ontario, Canada L4M 0G8
103 Miller Drive, Crittenden, Kentucky, USA 41030
7200 Trans Canada Highway, Montreal, Quebec, Canada H4T 1A3

Tel: 1-888-721-7253
napoleon.com

Tested and listed by Services Polytests inc. as per EPA METHODS ALT-125, ASTM E2515, ASTM E3053 and CSA B415.1 FOR EMISSIONS AND EFFICIENCY to US EPA's cord wood emissions standards for 2020 (EPA 40 CFR Part 60 Subpar CERTIFIED TO COMPLY WITH 2020 PARTICULATE EMISSIONS STANDARDS. Consult your owner's manual for complete installation instructions and check all local and national building codes. All specifications and designs are subject to change notice to allow for on-going product improvement. Images may not be exactly as shown. © Wolf Steel Ltd.