OWNER'S MANUAL

Outdoor LP Gas Barbecue Grill

Model No. GBT1726WRS

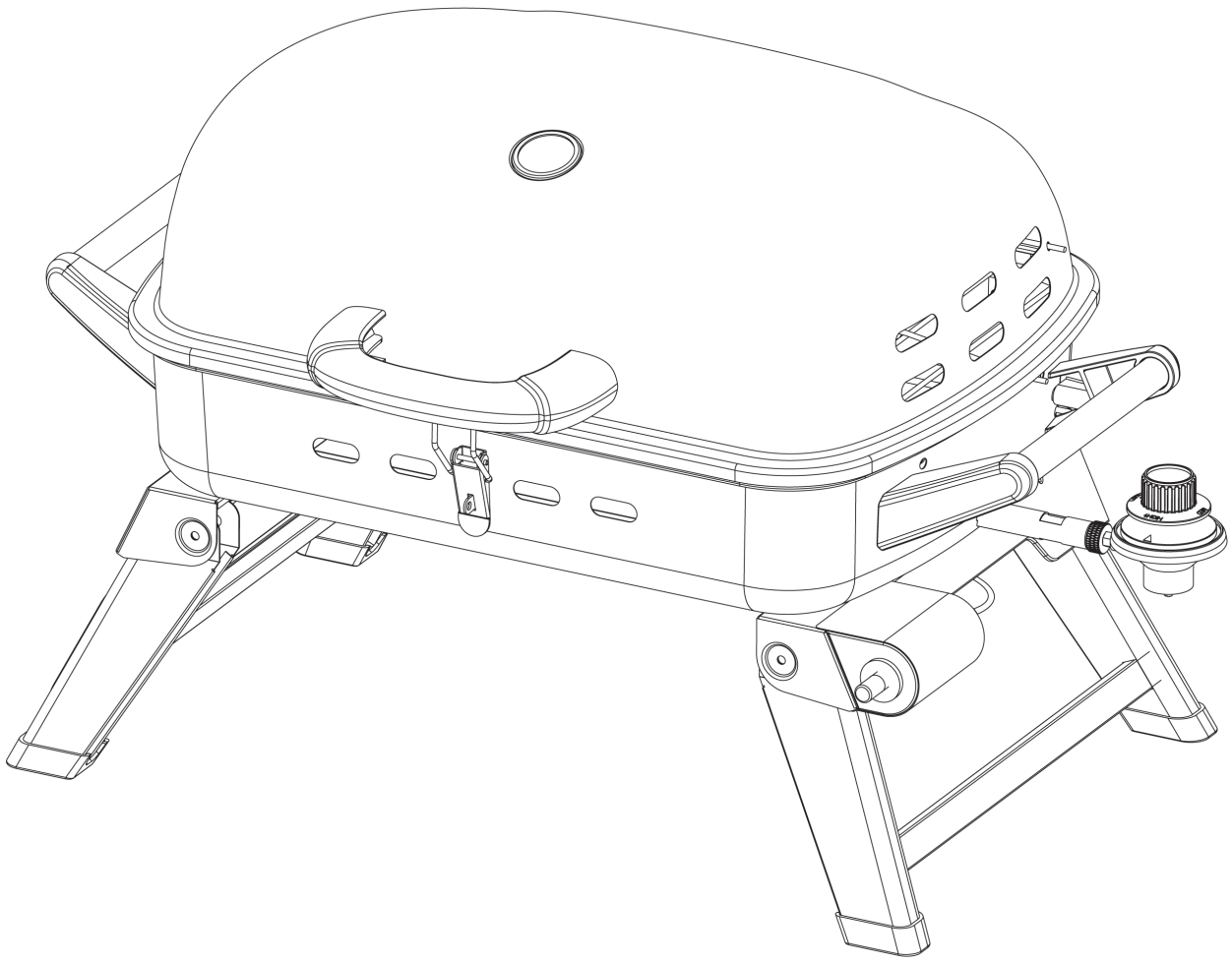

WARNING

FOR YOUR SAFETY:

1. **Do NOT store or use gasoline or other flammable liquids or vapors in the vicinity of this or any other appliance.**
2. **An LP cylinder not connected for use shall not be stored in the vicinity of this or any other appliance.**

DANGER

Never operate this appliance unattended.

WARNING

FOR YOUR SAFETY:
For Outdoor Use Only
(outside any enclosure)

DANGER

If you smell gas -

1. **Shut off gas to appliance.**
2. **Extinguish any open flame.**
3. **Open lid.**
4. **If odor continues, keep away from the appliance and immediately call your fire department.**

WARNING

FOR YOUR SAFETY:

1. **Improper installation, adjustment, alteration, service or maintenance can cause injury or property damage.**
2. **Read the installation, operation, and maintenance instructions thoroughly before installing or servicing this equipment.**
3. **Failure to follow these instructions could result in fire or explosion, which could cause property damage, personal injury, or death.**
4. **This instruction manual contains Important information necessary for the proper assembly and safe use of the appliance.**
5. **Read and follow all warnings and instructions before assembling and using the appliance.**
6. **Follow all warnings and instructions when using the appliance.**
7. **Keep this manual for future reference.**

Table of Contents

Important Safeguards . . . . . Page 2
Expanded View & Hardware 4
Assembly Instructions 5
Operating Instructions 9
Cleaning and Care 9
Limited Warranty 10
Troubleshooting 10

The use and installation must conform with local codes or, in the absence of local codes, with either the *National Fuel Gas Code, ANSI Z223.1/NFPA 54, Natural Gas and Propane Installation Code, CSA B149.1,* or *Propane Storage and Handling Code, B149.2,* or the *Standard for Recreational Vehicles, ANSI A 119.2/ NFPA 1192,* and *CSA Z240 RV Series, Recreational Vehicle Code,* as applicable.

THIS INSTRUCTION BOOKLET CONTAINS IMPORTANT SAFETY INFORMATION. PLEASE READ AND KEEP FOR FUTURE REFERENCE.

If you are assembling this unit for someone else, give this manual to them to read and save for future reference.

California Proposition 65: Combustion by-products produced when using this product contain chemicals known to the State of California to cause cancer, birth defects, and other reproductive harm.

California Proposition 65: Wash your hands after handling this product.

California Proposition 65: Handling the brass material on this product exposes you to lead, a chemical known to the State of California to cause cancer, birth defects, or other reproductive harm.

If you have questions or need assistance during assembly, please call 1-800-694-0013

Manufactured in China for: RevoAce Inc. Limited
Hong Kong, China

DESIGN CERTIFIED ®

Important Safeguards
Warning

- This grill is for outdoor use only, and should not be used in a building, garage or any other enclosed area.
- Do NOT operate, light or use this appliance within ten feet (3.05 m) of walls, structures or buildings.
- For residential use only. This grill is NOT for commercial use.
- This grill is not intended for and should never be used as a heater. TOXIC fumes can accumulate and cause asphyxiation.
- This is NOT a tabletop grill. Therefore, do NOT operate this grill on any type of tabletop surface.
- This grill is safety certified for use in the United States and/or Canada only. Do NOT modify for use in any other location. Modification will result in a safety hazard and will void your warranty.
- This grill is for use with liquid propane (LP) gas only. The conversion to or attempted use of natural gas in this LP gas grill is dangerous, may cause bodily harm and will void your warranty.
- LP gas characteristics:
  - a. LP gas is flammable and hazardous if handled improperly. Become aware of the characteristics before using any LP gas product.
  - b. LP gas is explosive under pressure, heavier than air, and settles and pools in low areas.
  - c. LP gas in its natural state has no odor. For your safety, an odorant is added that smells like rotten cabbage.
  - d. Contact with LP gas can cause freeze burns to skin.
- Apartment dwellers: Check with management to learn the requirements and fire codes for using a LP gas grill in your apartment complex. If allowed, use outside on the ground floor with a ten foot (3.05 m) clearance from any structure. Do NOT use on or under balconies.
- LP gas cylinder needed to operate. Only cylinders marked “propane” may be used.
- The LP gas cylinder must be constructed and marked in accordance with the *Specifications for LP-gas Cylinders* of the U.S. Department of Transportation (D.O.T.), *Cylinders, Spheres and Tubes for the Transportation of Dangerous Goods;* or the National Standard of Canada, *CAN/CSA-B339.*
- LP gas cylinder must be arranged for vapor withdrawal.
- Dented or rusted LP gas cylinders may be hazardous and should be checked by your LP gas supplier prior to use.
- The LP gas cylinder should not be dropped or handled roughly.
- LP gas cylinders must be stored outdoors out of the reach of children and must not be stored in a building, garage or any other enclosed area. Your cylinder must never be stored where temperatures can reach over 125°F.
- Do NOT insert any tool or foreign object into the valve outlet or safety relief valve. You may damage the valve and cause a leak. Leaking propane may result in an explosion, fire, severe personal injury or death.
- Do NOT block holes in sides, bottom or back of grill.
- Never keep an LP gas cylinder in a hot car or trunk. Heat will cause the gas pressure to increase, which may open the relief valve and allow gas to escape.
- Do NOT store a spare LP gas tank under or within 25 feet (7.62 m) of this appliance.
- Never attempt to attach this grill to the self-contained LP gas system of a camper trailer, motor home or house.
- The use of alcohol, prescription or non-prescription drugs may impair the consumer’s ability to properly assemble or safely operate the appliance.
- Strong odors, colds, sinus congestion, etc. may prevent the detection of propane. Use caution and common sense when testing for leaks.
- Never use charcoal, lighter fluid, lava rocks, gasoline, kerosene or alcohol with this product.
- Your grill has been checked at all factory connections for leaks. Recheck all connections as described in the “Operating Instructions” section of the manual, as shipping can loosen connections.
- Check for leaks even if your unit was assembled for you by someone else.
- Do NOT operate if a gas leak is present. Gas leaks may cause a fire or explosion.
- You must follow all instructions in the “Checking for Leaks” section before operating. To prevent a fire or explosion hazard when testing for a leak:
  - a. Always perform a leak test before lighting the grill and each time the cylinder is connected for use.
  - b. No smoking. Do NOT use or permit sources of ignition in the area while conducting a leak test.
  - c. Conduct the leak test outdoors in a well-ventilated area.
  - d. Do NOT use matches, lighters, or a flame to check for leaks.
  - e. The use of alcohol, prescription or non-prescription drugs may impair the consumer’s ability to properly assemble or safely operate the appliance.
  - f. Strong odors, colds, sinus congestion, etc. may prevent the detection of propane. Use caution and common sense when testing for leaks.
  - g. Do NOT use grill until any and all leaks are corrected. If you are unable to stop a leak, disconnect the LP gas supply. Call a gas appliance serviceman or your local LP gas supplier.
- Do NOT store or use gasoline or other flammable liquids or vapors within 25 feet (7.62 m) of this appliance.
- Do NOT use in an explosive atmosphere. Keep grill area clear and free from combustible materials, gasoline and other flammable vapors and liquids.
- Minimum clearance from sides and back of unit to combustible construction is 36 inches (91.4 cm). Do NOT use this appliance under any type of overhang or roof.
- It is essential to keep the grill’s regulator and valve assembly, burners and circulating air passages clean.
- Inspect grill before each use.
- Do NOT alter grill in any manner. Any alteration will void your warranty.
- Do NOT use the grill unless it is COMPLETELY assembled and all parts are securely fastened and tightened.
- This grill should be thoroughly cleaned and inspected on a regular basis.
- Clean and inspect the hose before each use of the appliance. If there is evidence of abrasion, wear, cuts or leaks, the hose must be replaced prior to operation.
- Use only the pressure regulator provided. Use only the replacement pressure regulator specified by RevoAce Inc. Limited.
- Do NOT attempt to repair or alter the pressure regulator for any assumed defect. Any modification to this assembly will void your warranty and create the risk of a gas leak and fire. Use only authorized replacement parts supplied by manufacturer.

Important Safeguards
Warning

- Use only RevoAce Inc. Limited factory-authorized parts. The use of any part that is not factory-authorized can be dangerous and will void your warranty.
- Do NOT operate this appliance without reading “Operating Instructions” in this manual.
- Do NOT touch metal parts of grill until they have completely cooled to avoid burns, unless you are wearing protective gear (pot holders, gloves, BBQ mitts, etc.).
- Do NOT install or use in or on boats or recreational vehicles (RV).
- Do NOT use grill in a vehicle trunk, station wagon, mini-van or sport utility vehicle (SUV).
- When cooking, fire extinguishing materials should be readily accessible. In the event of an oil/grease fire, do NOT attempt to extinguish with water. Use type BC or ABC dry chemical fire extinguisher or smother with dirt, sand or baking soda.
- Move gas hoses as far away as possible from hot surfaces and dripping hot grease.
- Do NOT use grill in high winds.
- Never lean over the grill when lighting.
- Do NOT leave a lit grill unattended. Keep children and pets away from grill at all times.
- Do NOT leave grill unattended while preheating or burning off food residue on high. If grill has not been cleaned, a grease fire can occur that may damage the product.
- Do NOT place empty cooking vessels on the appliance while in operation.
- Use caution when placing anything on the grill while the appliance is in operation.
- Do NOT attempt to move grill when in use. Allow the grill to cool before moving or storing.
- LP gas cylinder must be properly disconnected and removed prior to moving this grill.
- Storage of grill indoors is permissible only if the cylinder is disconnected, removed from the grill and properly stored outdoors.
- Always open grill lid carefully and slowly as heat and steam trapped within grill can cause severe burns.
- Do NOT attempt to disconnect the gas regulator from the cylinder or any gas fitting while the grill is in use.
- Disconnect LP gas tank when not in use.
- Always place your grill on a hard, non-combustible, level surface. An asphalt or blacktop surface may not be acceptable for this purpose.
- Do NOT use directly on wooden decks.
- Move gas hoses as far away as possible from hot surfaces and dripping hot grease.
- Keep all electrical cords away from a hot grill.
- After a period of storage and/or non-use, check for leaks, burner obstructions and inspect for any abrasion, wear or cuts to the hose.
- Failure to open lid while igniting the grill’s burner(s), or not waiting five minutes to allow the gas to clear if the grill does not light, may result in an explosive flame-up.
- Never operate grill without its heat plates installed.
- Always use a meat thermometer to ensure food is cooked to a safe temperature.
- Use protective gloves when assembling this product.
- Do NOT force parts together as this can result in personal injury or damage to the product.
- Never cover entire cooking area with aluminum foil.
- Deaths, serious injury or damage to property may occur if the above is not followed exactly.

Expanded View

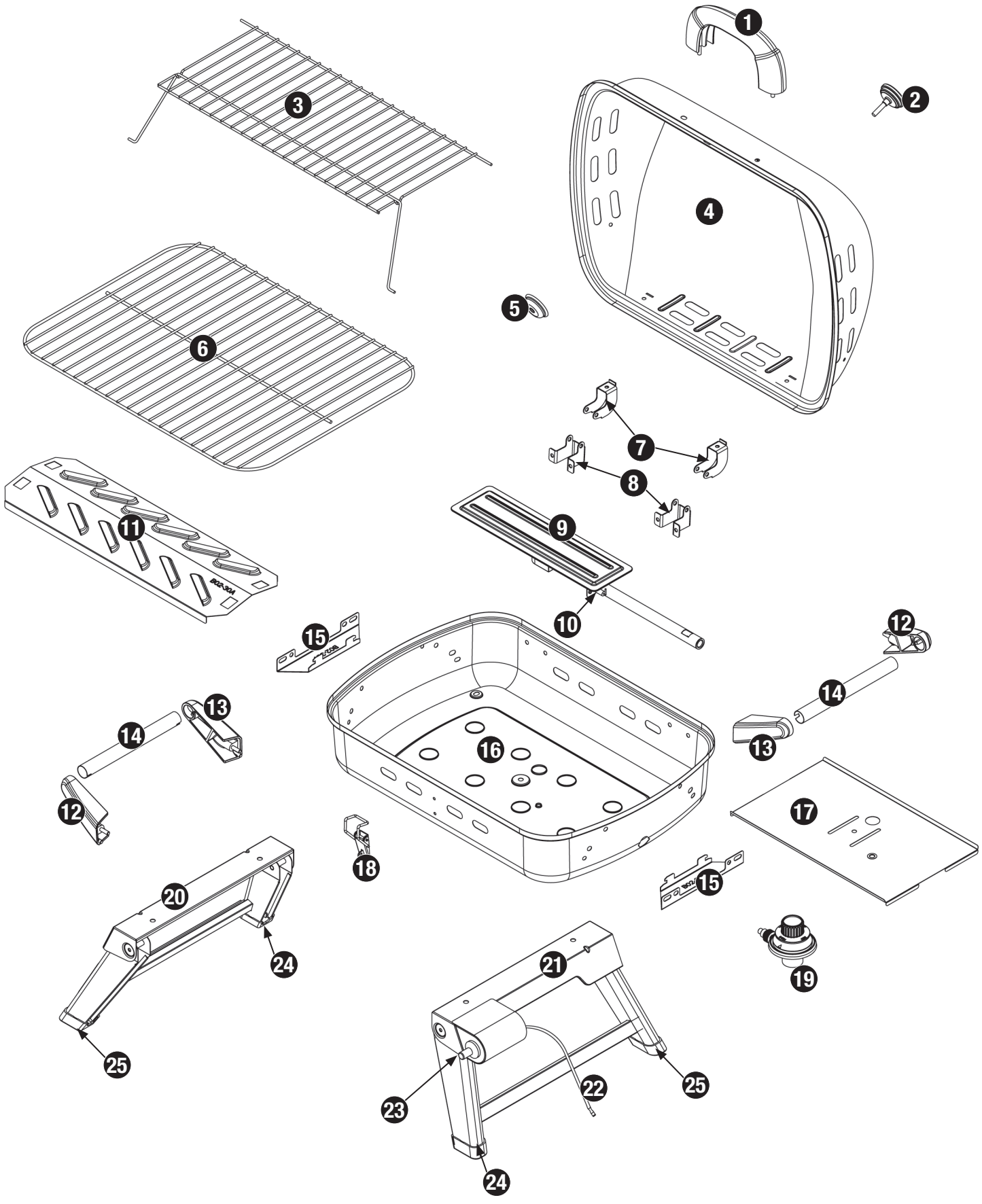

Parts List

1	Lid Handle	G1424-010
2	Temperature Gauge	B0104-H01
3	Warming Rack	G0926-020
4	Lid	G1726-01R
5	Temperature Gauge Support	H0722-030
6	Cooking Grid	G1321-040
7	Top Hinge (2)	N1218-050
8	Bottom Hinge (2)	N1218-060
9	Burner	G1424-070
10	Igniter	G1424-080
11	Heat Plate	B0230-A01
12	Side Handle Support A (2)	G1624-090
13	Side Handle Support B (2)	G1624-100
14	Side Handle Rod (2)	G1624-110
15	Heat Plate Support (2)	B0231-A0101
16	Bottom Bowl	G1624-120
17	Bottom Bowl Heat Shield	G1123-130
18	Lock	B0107-D01
19	Regulator/Control Knob	B0308-C03
20	Left Leg Assembly	G1424-140
21	Right Leg Assembly	G1424-150
22	Igniter Wire*	G1424-160
23	Igniter Button*	13039-170
24	Foot A (2)*	G1424-180
25	Foot B (2)*	G1424-190

* Pre-assembled

Hardware

A	Screw	M4x10 Stainless Steel Phillips Truss Head	2 pcs
B	Screw	M5x12 Nickel Plated Phillips Truss Head	10 pcs
C	Wing Bolt	M5x12 Nickel Plated	4 pcs
D	Wing Bolt	M6x8 Nickel Plated	1 pc
E	Wing Nut	M4 Nickel Plated	2 pcs
F	Wing Nut	M5 Nickel Plated	16 pcs
G	Washer	ø5 Nickel Plated	18 pcs
H	Washer	ø6 Nickel Plated	1 pc
I	Washer	ø6 Heat Resistant Washer	6 pcs
J	Washer	ø22 Nickel Plated	2 pcs
K	Lock Washer	ø5 Nickel Plated	16 pcs
L	Lock Washer	ø6 Nickel Plated	1 pc
M	Pin	ø5x32 Nickel Plated	2 pcs
N	Cotter Pin	ø1.4x38 Black	2 pcs

Tools Required for Assembly (Not Included)

#2 Phillips Head Screwdriver 1 pc

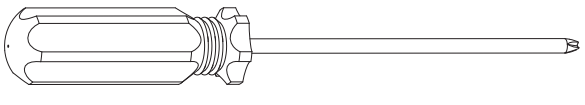

Assembly Instructions

1 DO NOT RETURN TO PLACE OF PURCHASE.

For assistance, call **1.800.694.0013** toll-free. Please have your owner's manual and model number available for reference.

Note: The model number can be found on the back or side of the grill.

Assembly Tips:

1. Select an area where you will assemble this product. To protect components, choose a smooth surface that's free of cracks or openings.
2. Spread out all parts.
3. Tighten all hardware connections by hand first. Then, before completing each step, go back and fully tighten all hardware. Be careful not to over-tighten. That could damage surfaces or strip threads.
4. For best results, complete each step in the order presented.

To complete assembly you will need:

- (1) Leak Detection Solution (instructions on how to make solution are included in "Operating Instructions" section).
- (1) 14.1 oz or (1) 16.4 oz LP gas tank (not included).

Typical assembly is approximately 30 minutes.

2 Attach Lid Handle and Top Hinges

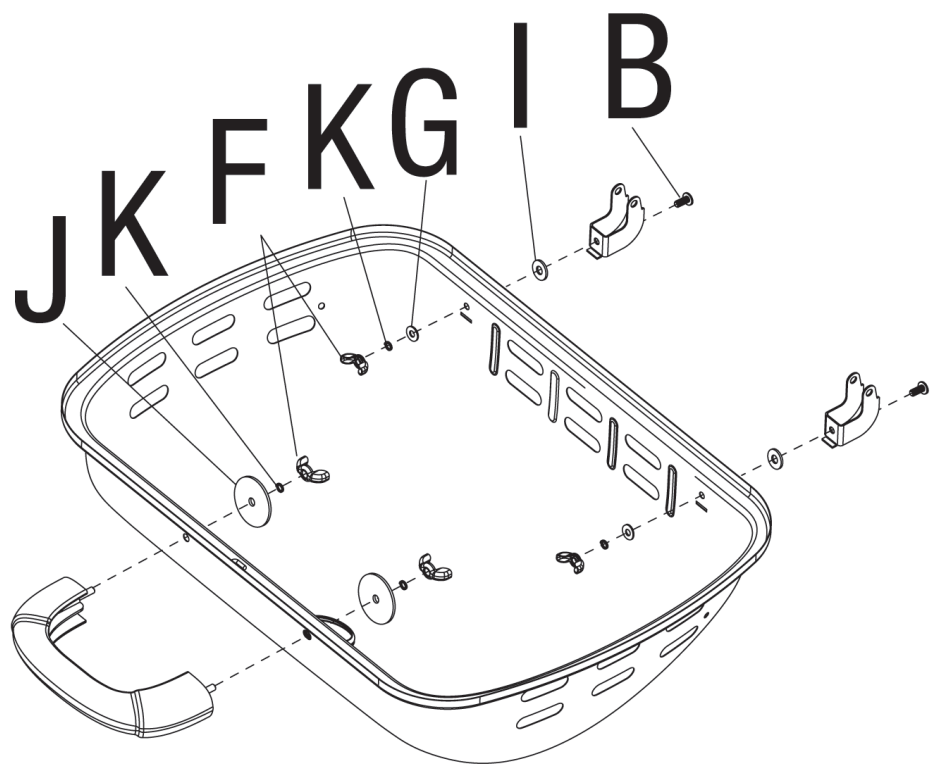

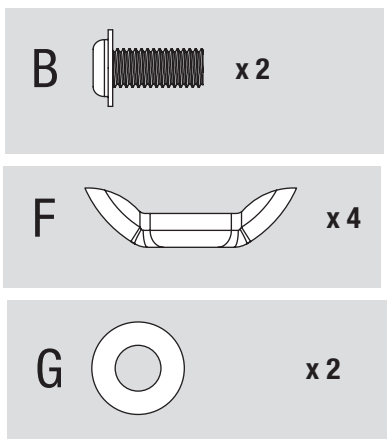

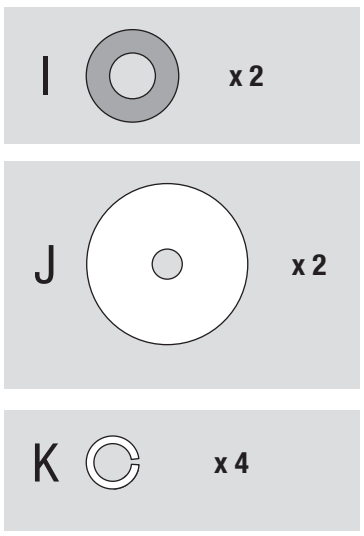

3 Attach Temperature Gauge

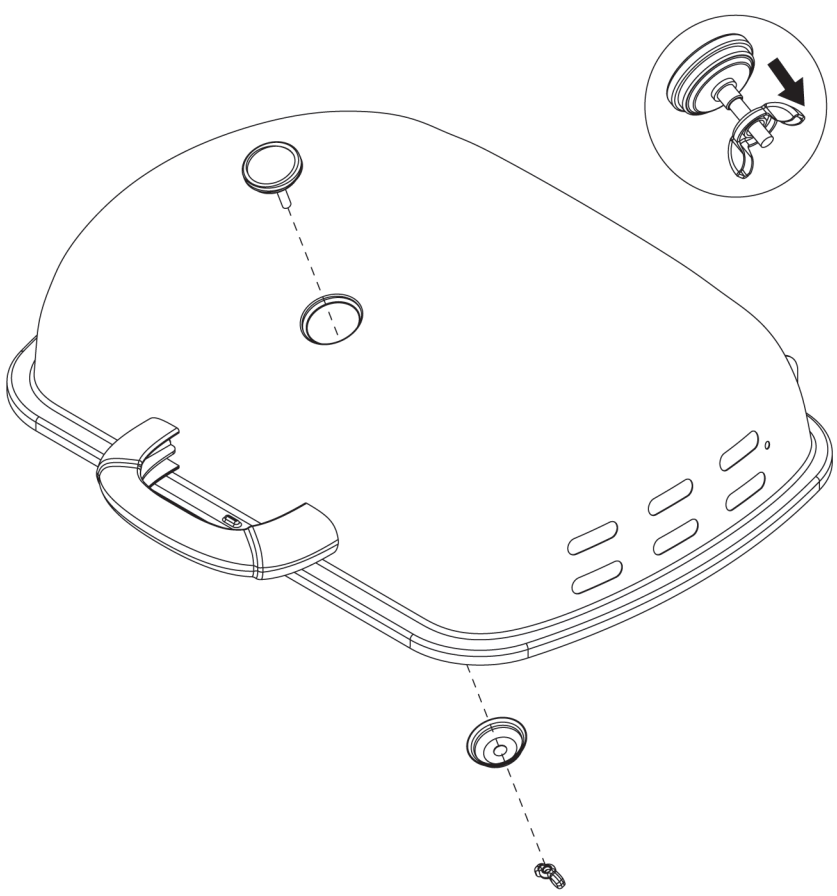

4 Attach Heat Plate Supports and Lock

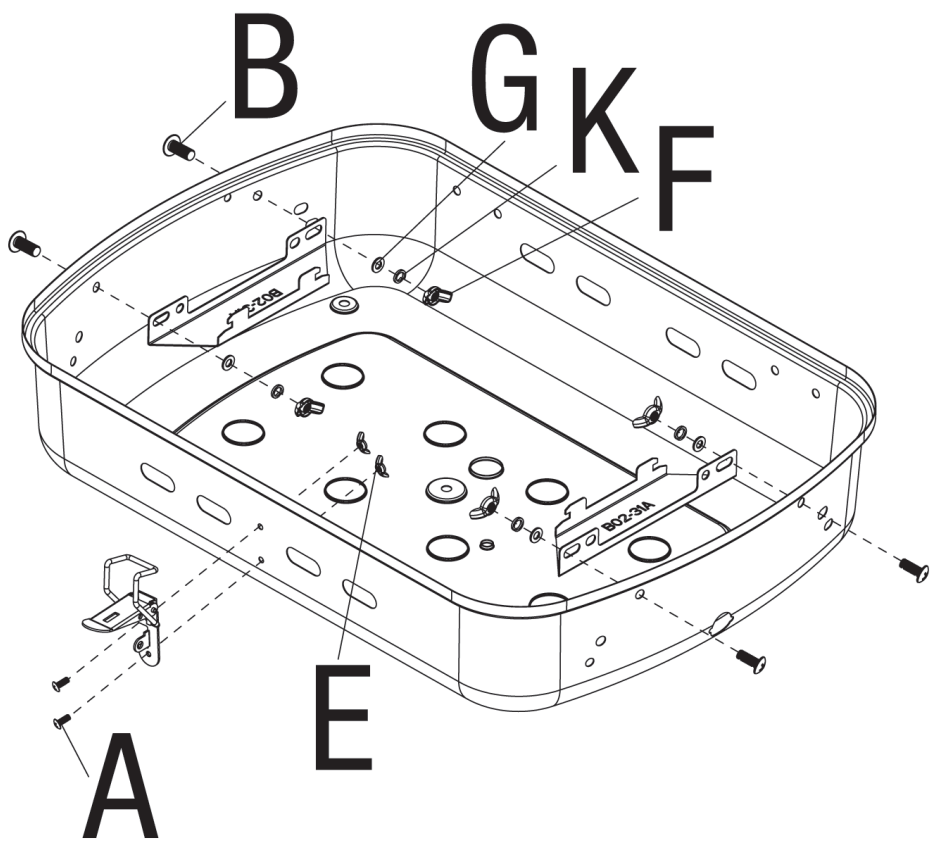

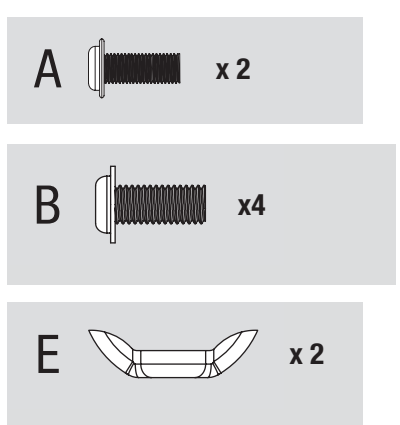

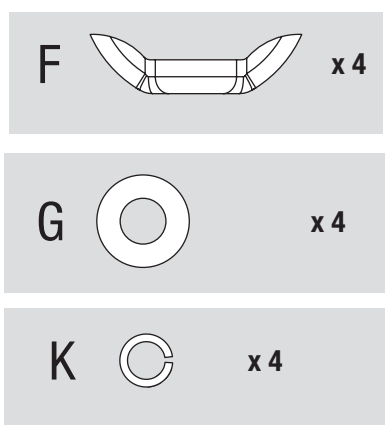

5 Attach Legs

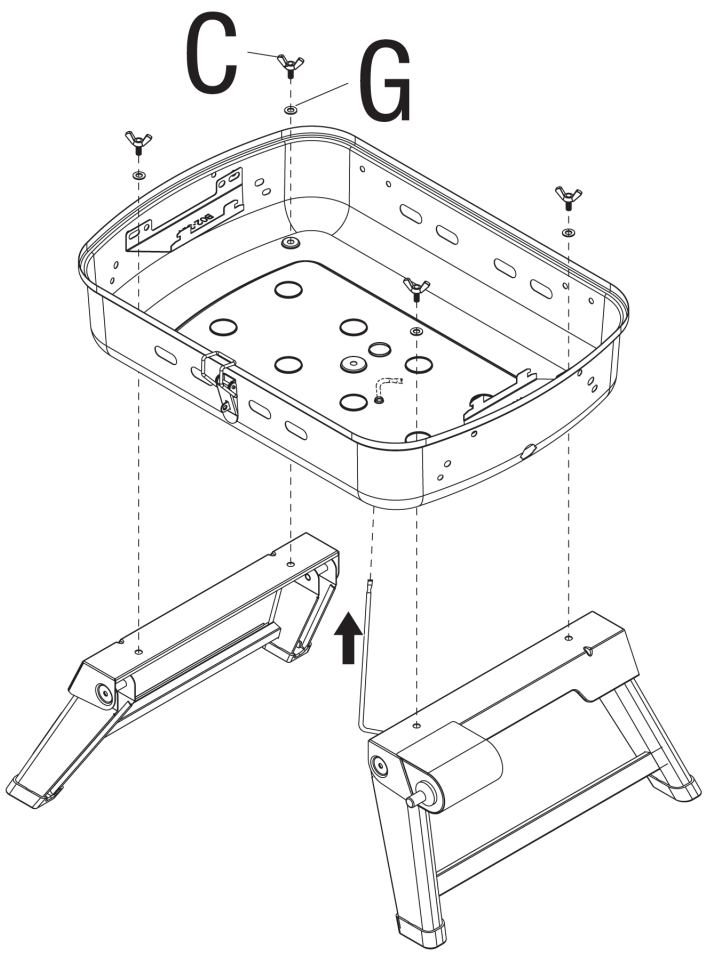

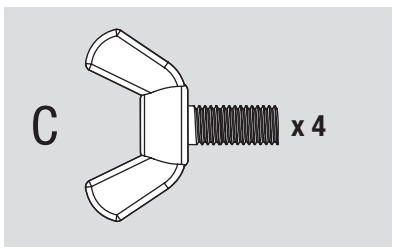

6 Attach Side Handles

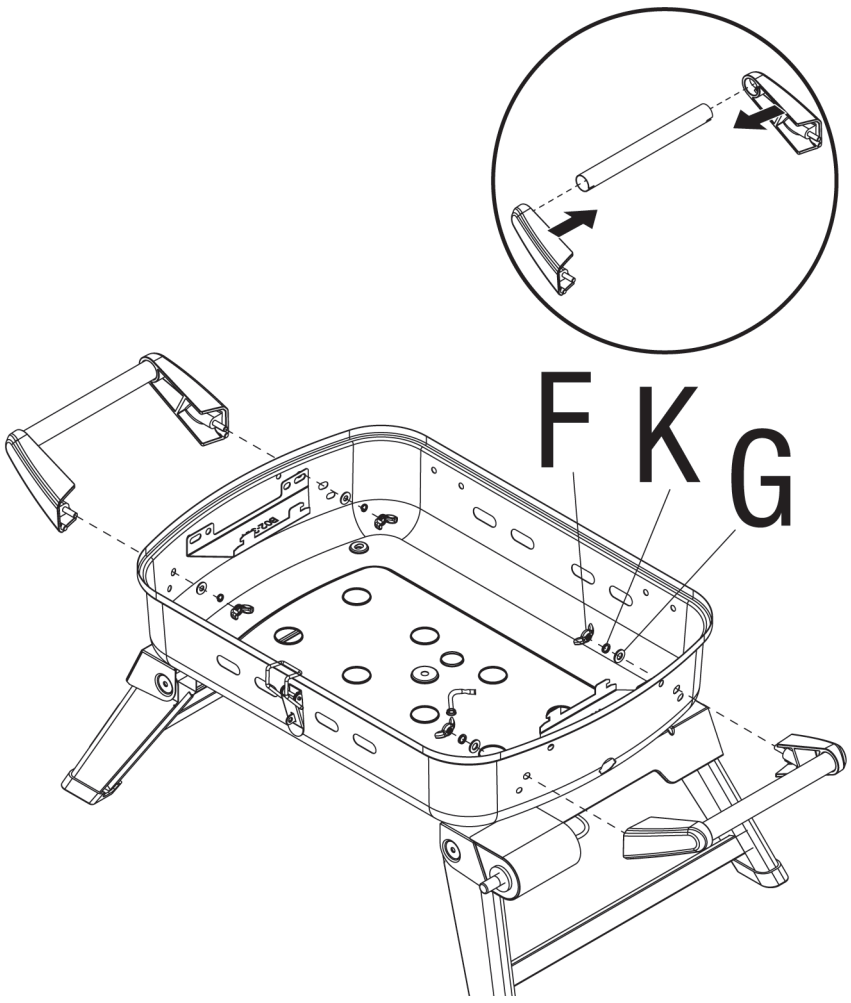

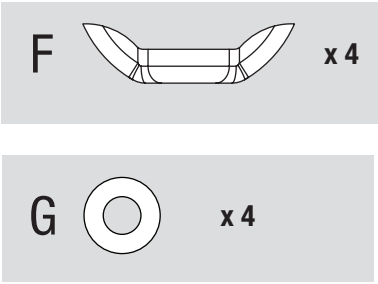

7 Attach Bottom Hinge

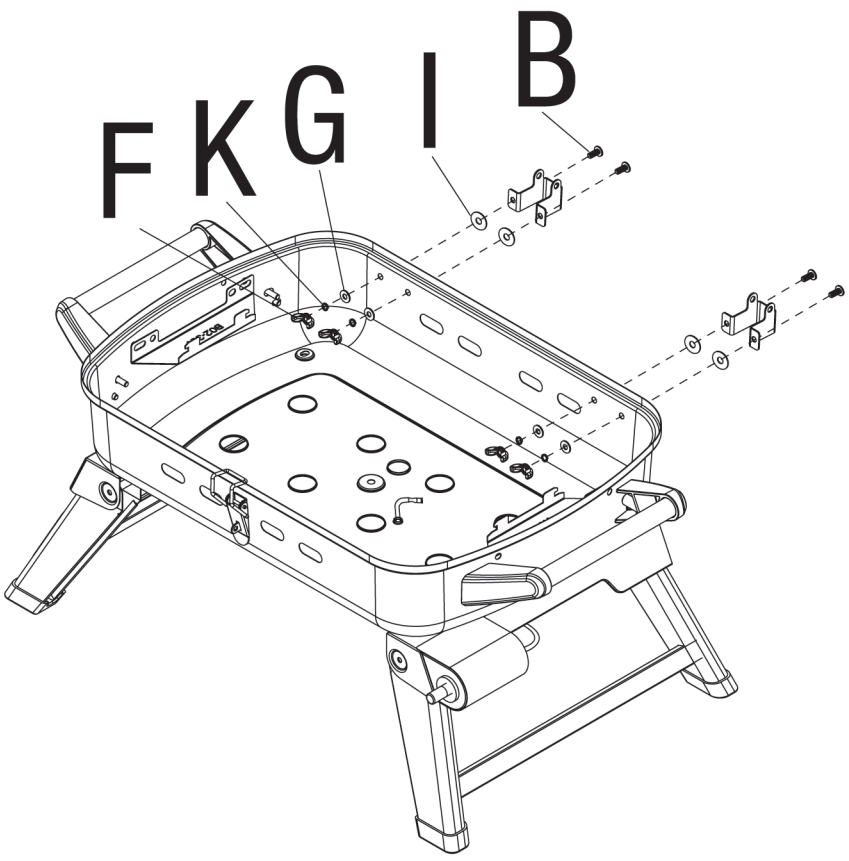

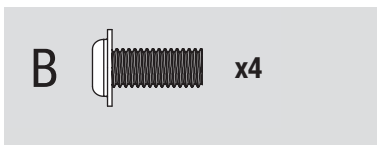

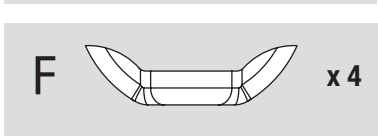

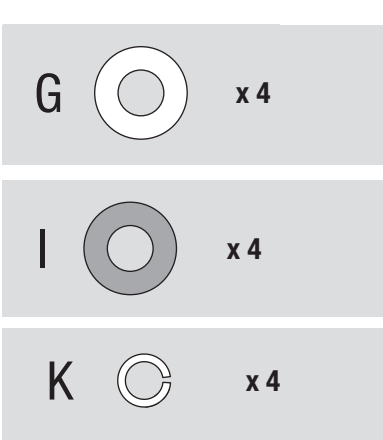

8 Attach Bottom Bowl Heat Shield, Burner and Connect Igniter Wire

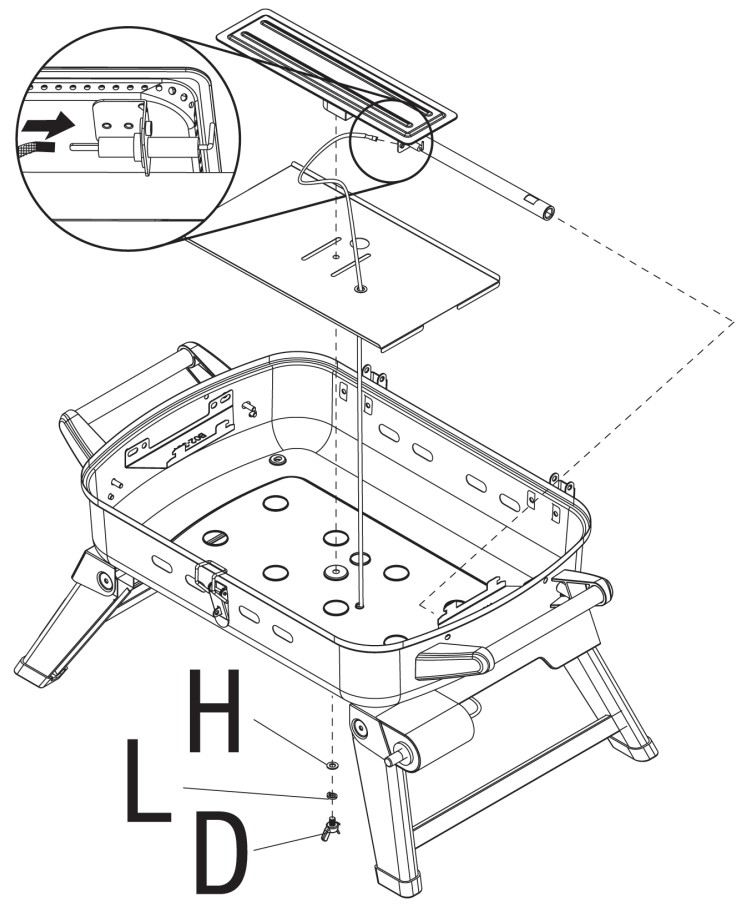

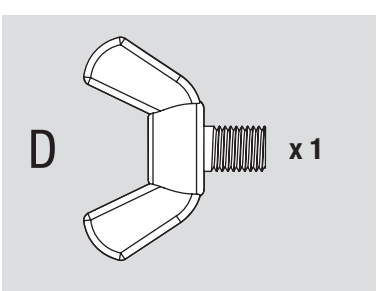

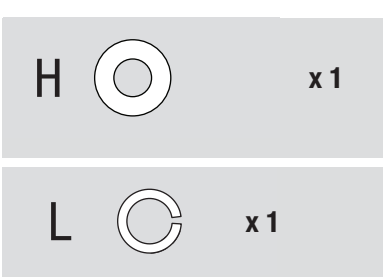

9 Attach Regulator/Control Knob

Note: Once attached, the regulator/control knob will freely rotate to accomodate for the LP gas tank.

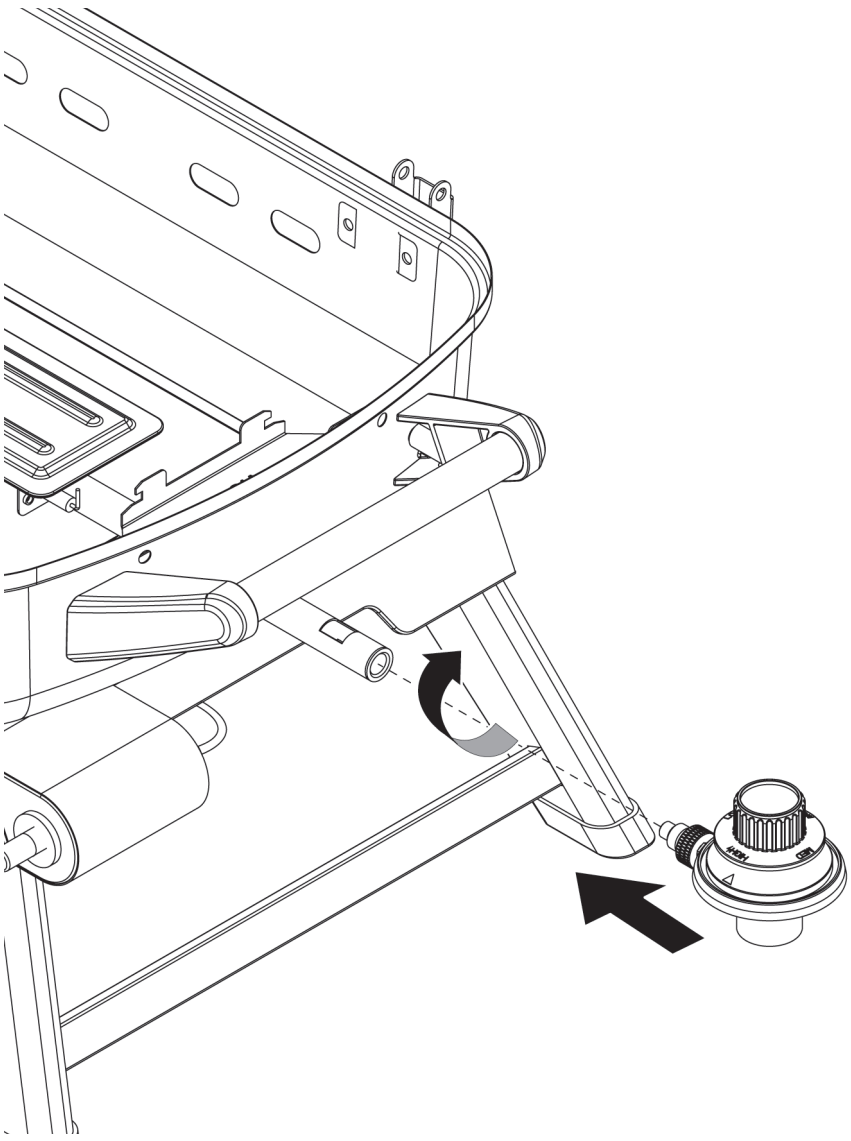

10 Attach Lid

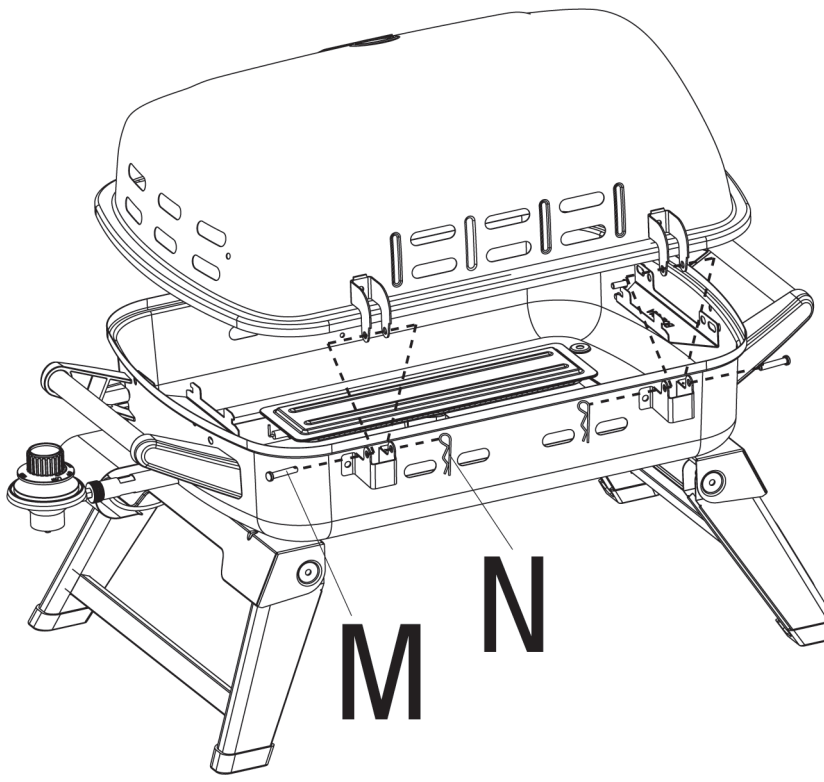

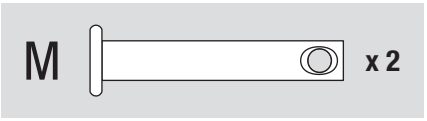

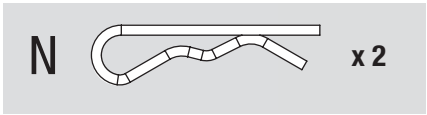

11 Insert Warming Rack

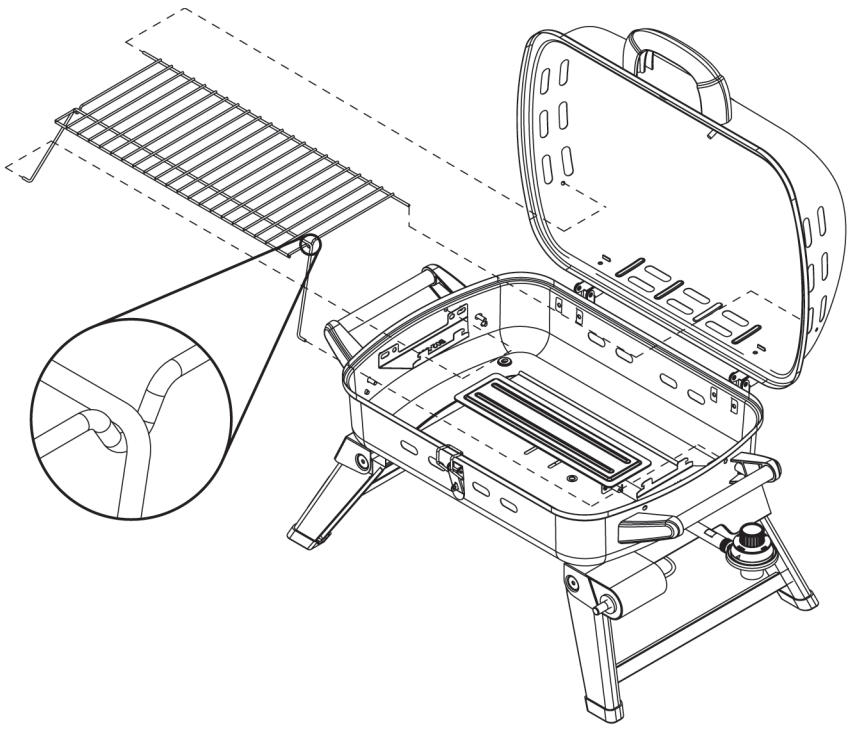

12 Insert Heat Plate and Cooking Grid

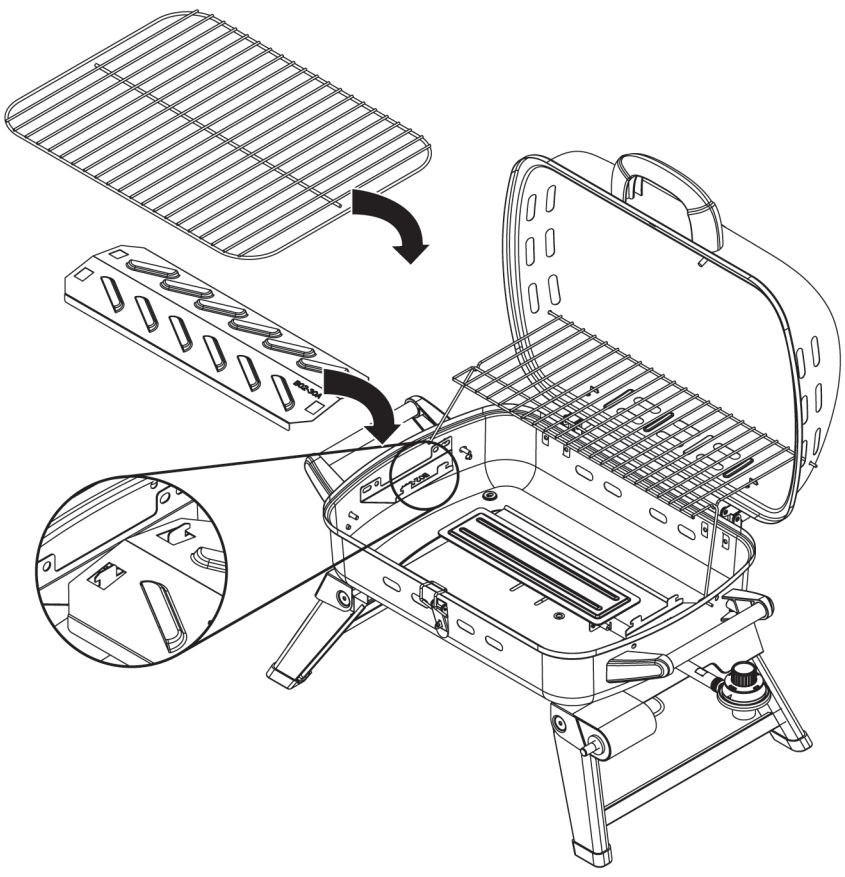

13

Locking Lid

Note: Lid must be locked before transporting grill.

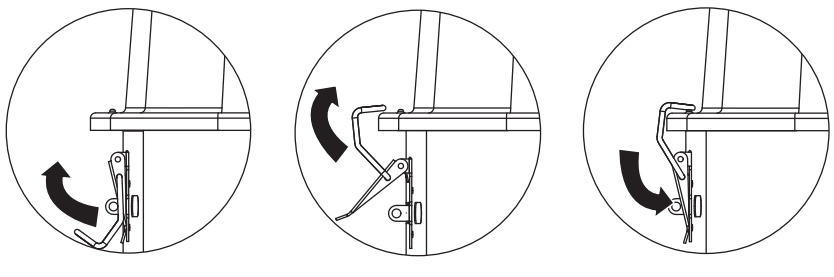

Unlocking Lid

Note: Always unlock and open lid before lighting grill.

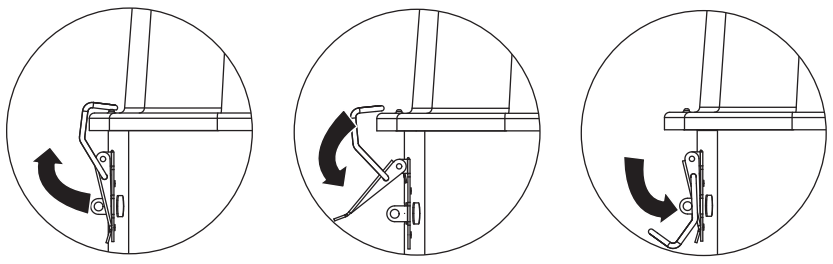

14

Fold Legs

Note: Lid must be locked before folding legs.

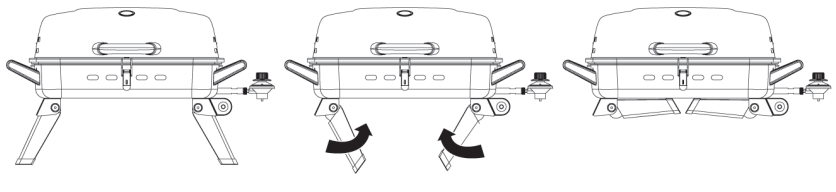

Unfold Legs

Note: Always open legs completely and secure in place before lighting grill.

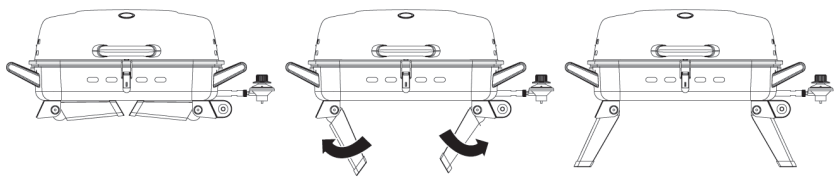

Operating Instructions

This grill is designed to operate with a 1 lb. 7.75 in. or 10.6 in. high disposable / 16.4 oz. or 14.1 oz. propane gas tank (DOT 39 Cylinder) (Figure 1).

CAUTION

DO NOT ATTEMPT TO REFILL ANY 1 lb. (16.4 oz. or 14.1 oz.) PROPANE GAS TANKS!

Figure 1

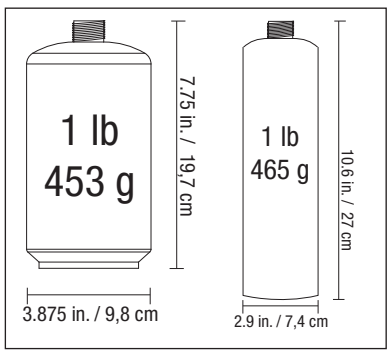

Connecting LP Gas Tank

Only cylinders marked "propane" may be used.

Note: 1 lb cylinders may form frost when near empty.

1. Make sure the regulator/control knob is in the "🔒 OFF" position (Figure 2).
2. Lubricate the threads of the regulator/control knob with petroleum jelly. Line up threads on LP gas tank with regulator/control knob.
3. Insert and rotate LP gas tank clockwise until they fit snugly together. HAND TIGHTEN ONLY. Be careful not to crossthread when screwing in tank (Figure 3).
4. Perform leak test per "Checking for Leaks" section.

Figure 2

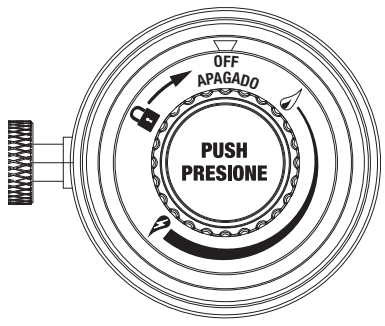

Disconnecting LP Gas Tank

1. Turn the regulator/control knob to the "🔒 OFF" position (Figure 2).
2. Rotate LP gas tank counterclockwise until it is detached (Figure 4).
3. Store the LP gas tank in a proper location, per instructions on the LP gas tank.

Checking for Leaks

Burner Connections

1. Make sure the regulator/control knob is securely fastened to the burner.
   Note: The brass nut should be ¼ to ½ turn past tight. The regulator will rotate 360º even when the brass nut is tightened.
   If your unit was assembled for you, visually check the connection between the burner and regulator/control knob (Figure 5).

⚠ **WARNING: Failure to inspect this connection or follow these instructions could cause a fire or an explosion which can cause death, serious bodily injury or damage to property.**

2. If the burner and regulator/control knob do not fit properly or if you have any questions, please contact 1.800.694.0013 for assistance.

Figure 3

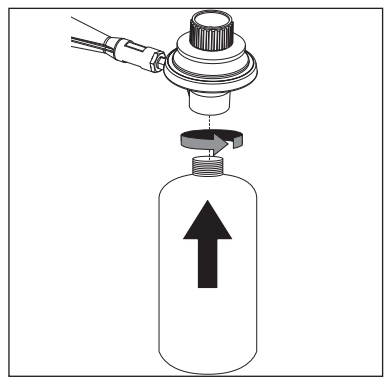

Tank/Gas Line Connection

1. Make 2-3 oz. of leak detection solution by mixing one part liquid dishwashing soap with three parts water.
2. Make sure regulator/control knob is in the "🔒 OFF" position (Figure 2).
3. Spoon the leak detection check solution on all "X" locations (Figure 5).
   a. If any bubbles appear, remove the LP gas tank and reconnect, making sure the connection is secure.
   b. If you continue to see bubbles after several attempts, remove the LP gas tank per "Disconnecting LP Gas Tank" section, and contact 1.800.694.0013 for assistance.
   c. If no bubbles appear after one minute, turn regulator/control knob to the "🔒 OFF" position, wipe away solution and proceed.

Figure 4

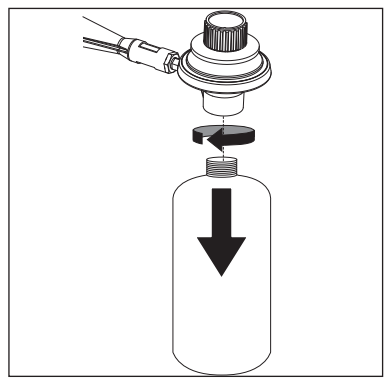

First Use

1. Make sure all labels, packaging and protective films have been removed from the grill.
2. Remove manufacturing oils before cooking on this grill for the first time by operating the grill for at least 15 minutes on 🔥 (HIGH) with the lid closed. This will "heat clean" the internal parts and dissipate odors.

Lighting Instructions

⚠ **CAUTION: Keep outdoor gas cooking appliance area clear and free from combustible materials, gasoline and other flammable vapors and liquids.**

⚠ **CAUTION: Do NOT obstruct the flow of combustion and ventilation air.**

⚠ **CAUTION: Check and clean burner/venturi tubes for insects and insect nests. A clogged tube can lead to a fire.**

⚠ **CAUTION: Attempting to light the burner with the lid closed may cause an explosion.**

⚠ **CAUTION: Always open legs completely and secure in place before opening lid or lighting grill.**

1. Open lid.
2. Check for obstructions of airflow to the burners. Spiders, insects and webs can clog the burner/venturi tube. A clogged burner/venturi tube can lead to a fire.
3. Connect LP gas tank per "Connecting LP Gas Tank" section.
4. Turn the control knob to 🔥 (HIGH).
5. Press the igniter button quickly 3 to 4 times to light burner.
6. If ignition does not occur in 5 seconds, turn regulator/control knob to "🔒 OFF" position, wait 5 minutes and repeat lighting procedure.
7. If igniter does not light burner, use a lit match to light burner manually. Access the burner through the hole in bottom bowl or side as indicated (Figure 6). Turn the regulator/control knob to 🔥 (LOW) and position the lit match near side of the burner.
8. After lighting, observe the burner flame. Make sure all burner ports are lit and flame height matches illustration (Figure 7).

Figure 5

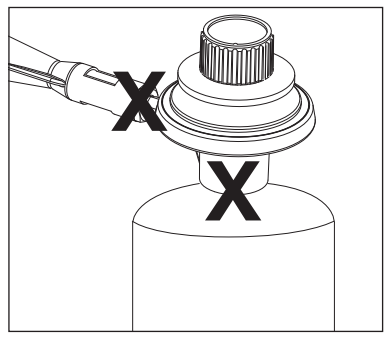

Figure 6

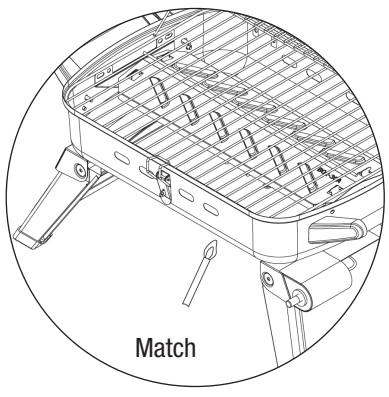

Turning Off

1. Turn regulator/control knob to the "🔒 OFF" position (Figure 2).
   Note: A "poof" sound is normal as the last of the LP gas is burned.
2. Disconnect LP gas tank per "Disconnecting LP Gas Tank" section.

CAUTION

⚠ **If burner flame goes out during operation, immediately turn the regulator/control knob "🔒 OFF" and open lid to let the gas clear for 5 minutes before re-lighting.**

Cooking

1. Open lid and ignite the side burner per "Lighting Instructions" section.
2. Close lid and preheat grill on 🔥 (HIGH).
3. Adjust regulator/control knob to desired flame height.
4. Wear protective gloves and use long handle tongs to place food onto cooking grids above the lit burner.
5. With lid open or closed, cook until desired internal food temperatures are achieved.
6. Turn grill off per "Turning Off" section.

CAUTION

⚠ **Do NOT leave grill unattended while preheating or burning off food residue on 🔥 (HIGH). If grill has not been cleaned, a grease fire can occur.**

Figure 7

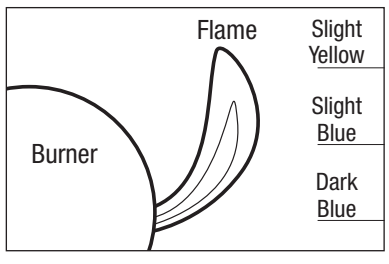

Operating Instructions (continued)

Controlling Flare-ups

- **If a grease fire develops, turn regulator/control knob "🔒 OFF." Do NOT use water on a grease fire. This can cause the grease to splatter and could result in serious burns, bodily harm or other damage.**
- **Do NOT leave grill unattended while preheating or burning off food residue on 🔥 (HIGH). If grill has not been cleaned, a grease fire can occur that may damage the product.**

Flare-ups are a part of cooking meats on a grill and add to the unique flavor of grilling.

Excessive flare-ups can over-cook your food and be dangerous.

Important: Excessive flare-ups result from the build-up of grease in the bottom of your grill.

If a grease fire occurs, close the lid **AND** turn regulator/control knob to "🔒 OFF," until the grease burns out. Use caution when opening the lid as sudden flare-ups may occur.

If excessive flare-ups occur, do **NOT** pour water onto the flames.

Minimize Flare-ups:

1. Trim excess fat from meats prior to cooking.
2. Cook high fat content meats on 🔥 (LOW) setting or indirectly.
3. Ensure that your grill is on a hard, level, non-combustible surface and the grease is allowed to drain into grease receptacle.

CAUTION

⚠ Putting out grease fires by only closing the lid is not possible.

WARNING

⚠ When cooking, fire extinguishing materials should be readily accessible. In the event of an oil/grease fire, use type BC dry chemical fire extinguisher or smother with dirt, sand or baking soda. Do NOT attempt to extinguish with water.

Cleaning and Care

CAUTION

1. **All cleaning and maintenance should be done when grill is cool and with the fuel supply disconnected.**
2. **Do NOT clean any grill part in a self-cleaning oven. The extreme heat will damage the finish.**
3. **Do NOT enlarge valve orifices or burner ports when cleaning the valves or burners.**

NOTICE

1. **This grill should be thoroughly cleaned and inspected on a regular basis.**
2. **Abrasive cleaners will damage this product.**
3. **Never use oven cleaner to clean any part of grill.**

Before Each Use:

1. Keep the grill area clean and free from any combustible materials, gasoline, and other flammable vapors and liquids.
2. Do NOT obstruct the flow of the combustion of LP gas and the ventilation of air.
3. Keep the ventilation opening(s) of the LP gas tank area free and clear from debris.
4. Visually check the burner flames to make sure your grill is working properly (Figure 8).
5. See below for proper cleaning instructions.
6. Check for obstructions of airflow to the burners. Spiders, insects and webs can clog the burner/venturi tube. A clogged burner/venturi tube can lead to a fire.

Figure 8

Burner Flame Conditions

Use this chart to see if your burners need to be cleaned.

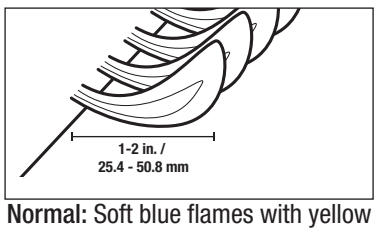

Normal: Soft blue flames with yellow tips between 1 in. - 2 in. height.

Needs cleaning: Noisy with hard blue flames.

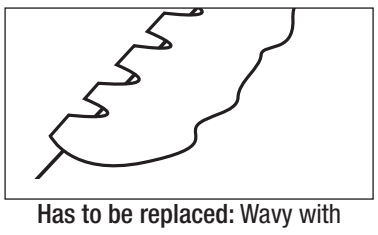

Has to be replaced: Wavy with yellow flames.

Cleaning Surfaces

1. Wipe surfaces clean with mild dishwashing detergent or baking soda mixed with water.
2. For stubborn surfaces, use a citrus-based degreaser and a nylon scrubbing brush.
3. Rinse clean with water.
4. Allow to air dry.

Cleaning Main Burners

1. Turn regulator/control knob to "🔒 OFF."
   Note: A "poof" sound is normal as the last of the LP gas is burned.
2. Disconnect LP gas tank per "Disconnecting LP Gas Tank" section.
3. Remove regulator/control knob and wind guard.
4. Remove cooking grid and heat plate.
5. Disconnect wire from igniter, if applicable.
6. Remove burner.
7. Remove all food residue and dirt from burner surface.
8. Disconnect wire from spark electrode.
9. Clean inlet of burner with small bottle brush or compressed air.
10. Clean any clogged ports with a stiff wire (such as an opened paper clip).
11. Inspect burner for any damage (cracks or holes). If damage is found, replace with a new burner from manufacturer.
12. Reinstall burner. Reconnect igniter (if applicable), wind guard and regulator/control knob.
13. Replace heat plate and cooking grid.
14. Connect LP gas tank per "Installing LP Gas Tank" section.
15. Perform leak test per "Checking for Leaks" section.

Before Storing

1. Turn LP gas tank valve to "CLOSED."
2. Turn regulator/control knob to "🔒 OFF."
   Note: A "poof" sound is normal as the last of the LP gas is burned.
3. Disconnect LP gas tank per "Disconnecting LP Gas Tank" section.
4. Clean all surfaces.
5. Lightly coat the burner(s) and cooking grid with cooking oil to prevent excess rusting.
6. If storing the grill indoors, disconnect the LP tank per "Disconnecting LP Gas Tank" section.
7. Place the protective cap cover on the LP tank and store the tank outdoors in a well-ventilated area out of direct sunlight.
8. If storing the grill indoors, cover the grill and store in a cool dry place.
9. If storing the grill outdoors, cover the grill with a grill cover for protection from the weather.

Limited Warranty

RevoAce Inc. Limited ("RA") warrants to the original retail purchaser of this product, and to no other person, that if this product is assembled, maintained, and operated in accordance with the printed instructions accompanying it, then for a period of one (1) year for all remaining parts from the date of purchase, all parts in such product shall be free from defects in material and workmanship. RA may require reasonable proof of your date of purchase. Therefore, you should retain your sales slip or invoice. This Limited Warranty shall be limited to the repair or replacement of parts, which prove defective under normal use and service and which RA shall determine in its reasonable discretion upon examination to be defective. Before returning any parts, you should contact RA's Customer Care Department using the contact information listed below. If RA conforms, after examination, a defect covered by this Limited Warranty in any returned part, and if RA approves the claim, RA will replace such defective part without charge. If you return defective parts, transportation charges must be prepaid by you. RA will return replacement parts to the original retail purchaser, freight or postage prepaid. This Limited Warranty does not cover any failures or operating difficulties due to accident, abuse, misuse, alteration, misapplication, improper installation or improper maintenance or service by you or any third party, or failure to perform normal and routine maintenance on the product as set out in this owner's manual. In addition, the Limited Warranty does not cover damage to the finish, such as scratches, dents, discoloration, rust or other weather damage, after purchase.

This Limited Warranty is in lieu of all other express warranties. RA disclaims all warranties for products that are purchased from sellers other than authorized retailers or distributors, including the warranty of merchantability or the warranty of fitness for a particular purpose. RA ALSO DISCLAIMS ANY AND ALL IMPLIED WARRANTIES, INCLUDING WITHOUT LIMITATION THE IMPLIED WARRANTIES OF MERCHANTABILITY AND FITNESS FOR A PARTICULAR PURPOSE. RA SHALL HAVE NO LIABILITY TO PURCHASER OR ANY THIRD PARTY FOR ANY SPECIAL, INDIRECT, PUNITIVE, INCIDENTAL, OR CONSEQUENTIAL DAMAGES. RA further disclaims any implied or express warranty of, and assumes no responsibility for, defects in workmanship caused by third parties. This Limited Warranty gives the purchaser specific legal rights; a purchaser may have other rights depending upon where he or she lives. Some jurisdictions do not allow the exclusion or limitation of special, incidental or consequential damages, or limitations on how long a warranty lasts, so the above exclusion and limitations may not apply to everyone. RA does not authorize any person or company to assume for it any other obligation or liability in connection with the sale, installation, use, removal, return, or replacement of its equipment, and no such representations are binding on RA.

RevoAce Inc. Limited

Hong Kong, China

1.800.694.0013

Troubleshooting

Problem	Possible Cause	Prevention/Cure
Burner will not light using igniter (if included)	LP gas tank is low or empty	Replace LP gas tank
	LP gas leak	1. Turn LP gas tank valve to "🔒 OFF" 2. Wait 5 minutes for gas to clear 3. Follow "Checking for Leaks" section
	Wires or electrode covered with cooking residue	Clean wire and/or electrode with rubbing alcohol
	Electrode and burners are wet	Wipe dry with cloth
	Electrode cracked or broken - sparks at crack	Replacement part(s) may be needed - contact Customer Care at 1.800.694.0013
	Wire loose or disconnected	Reconnect wire or replacement part(s) may be needed - contact Customer Care at 1.800.694.0013
	Wire is shorting (sparking) between igniter and electrode	Replacement part(s) may be needed - contact Customer Care at 1.800.694.0013
	Bad igniter	Replacement part(s) may be needed - contact Customer Care at 1.800.694.0013
Burner will not light with match	No gas flow	Check if LP gas tank is empty A. If empty, replace B. If LP gas tank is not empty, refer to "Sudden drop in gas flow or reduced flame height" below
	LP gas tank is low or empty	Replace LP gas tank
	LP gas leak	1. Turn LP gas tank valve to "🔒 OFF" 2. Wait 5 minutes for gas to clear 3. Follow "Checking for Leaks" section
	Coupling nut and regulator not fully connected	Turning the coupling nut about one-half to three-quarters additional turn until solid stop. **Tighten by hand only – do NOT use tools.**
	Obstruction of gas flow	Clear burner/venturi tube
	Spider webs or insect nest in venturi	Clean burner/venturi tube
	Burner ports clogged or blocked	Clean burner ports
Sudden drop in gas flow or reduced flame height	Out of gas	Replace LP gas tank
Irregular flame pattern – flame does not run the full length of burner	Burner ports are clogged or blocked	Clean burner ports
Flame is yellow or orange	New burner may have residual manufacturing oils	Operate grill for 15 minutes on 🔥 (HIGH) with the lid closed
	Spider webs or insect nest in burner/venturi tube	Clean burner/venturi tube
	Food residue, grease, etc. on burners	Clean burner
	Poor alignment of valve to burner/venturi tube	Ensure burner/venturi tube is properly engaged with valve
Flame goes out	High or gusting winds	Do not use grill in high winds
	Low on LP gas	Replace LP gas tank
	Overflow valve tripped	Refer to "Sudden drop in gas flow or reduced flame height," above
Flare-up	Grease buildup	Remove and clean all grill parts per "Cleaning and Care" section
	Excess fat in meat	Trim fat from meat before grilling
	Excessive cooking temperature	Adjust (lower) cooking temperature
Persistent grease fire	Grease trapped by food buildup around burner system	1. Turn control knob to "🔒 OFF" 2. Leave lid in closed position and let fire burn out 3. After grill cools, remove and clean all grill parts per "Cleaning and Care" section
Flashback (fire in burner tube(s))	Burner and/or burner tubes are blocked	Clean burner and/or burner/venturi tube
Inside of lid is peeling (like paint peeling)	Baked on grease buildup has turned to carbon and is flaking off.	Clean all grill parts per "Cleaning and Care" section.