This Owner's Manual is provided and hosted by Appliance Factory Parts.

Appliance Factory Parts
Experts in BBQ, Humidifier, & Appliance Parts
1-800-955-7075

Napoleon WPX080S3AA-N Owner's Manual

Shop genuine replacement parts for Napoleon WPX080S3AA-N

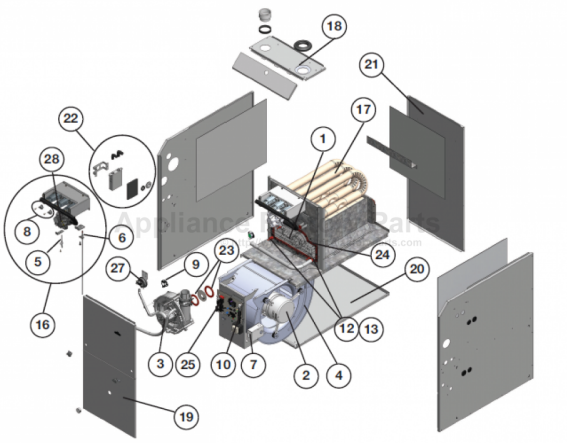

Find Your Napoleon HVAC Parts - Select From 105 Models

-------- Manual continues below --------

INSTALLER: PLEASE FAMILIARIZE YOURSELF WITH VENTING/DRAINING SECTIONS OF THIS MANUAL BEFORE PROCEEDING WITH THE INSTALLATION. LEAVE THIS MANUAL WITH THE APPLIANCE FOR FUTURE REFERENCE.

CONSUMER: RETAIN THIS MANUAL FOR FUTURE REFERENCE.

IOM

UM PG 65

NAPOLEON

INSTALLATION AND OPERATING INSTRUCTIONS

CERTIFIED TO ANSI Z21.47-2016 / CSA 2.3-2016

WPX-N SERIES

SINGLE STAGE MULTI POSITION HIGH EFFICIENCY (CONDENSING) FORCED AIR GAS FURNACE

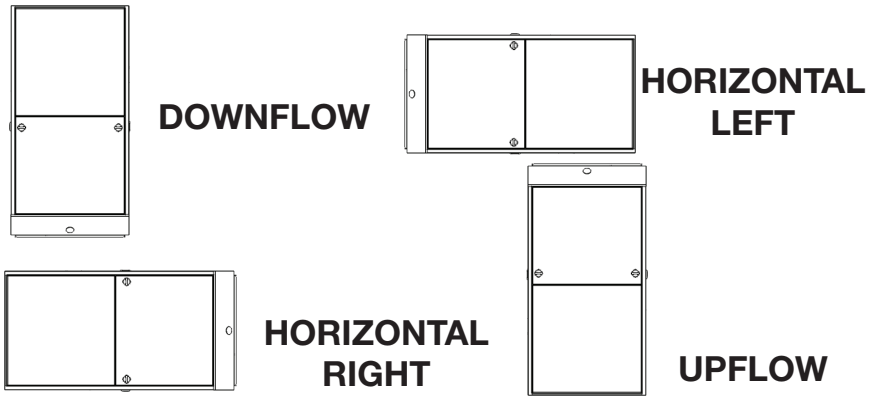

SAFETY INFORMATION

WARNING

ELECTRICAL SHOCK, FIRE OR EXPLOSION HAZARD

Failure to follow safety warnings exactly could result in serious injury, death or property damage.

Improper servicing could result in dangerous operation, serious injury, death or property damage.

As a professional installer, you have an obligation to know the product better than the customer. This includes all safety precautions and related items.

Prior to actual installation, thoroughly familiarize yourself with this instruction manual. Pay special attention to all safety warnings. Often during installation or repair, it is possible to place yourself in a position which is more hazardous than when the unit is in operation.

Remember, it is your responsibility to install the product safely and to know it well enough to be able to instruct a customer in its safe use.

AHRI CERTIFIED® www.ahridirectory.org Residential Furnaces DOE 10 CFR Part 430

ENERGUIDE

Quality System Certified To ISO 9001-2015

MANUFACTURER RESERVES THE RIGHT TO DISCONTINUE, OR CHANGE AT ANY TIME, SPECIFICATIONS OR DESIGNS WITHOUT NOTICE AND WITHOUT INCURRING OBLIGATIONS.

Wolf Steel Ltd., 24 Napoleon Rd., Barrie, ON, L4M 0G8 Canada /
103 Miller Drive, Crittenden, Kentucky, USA, 41030
Phone (705)721-1212 • Fax (705)722-6031 • www.napoleon.com • hvac@napoleon.com

H1.52A

$10.00

W415-2304 / C / 09.22.20

TABLE OF CONTENTS

1.0 INTRODUCTION 4
2.0 SAFETY SYMBOLS AND WARNINGS 4
2.1 SAFETY RULES 6
2.2 CODES 7
3.0 FURNACE SIZING 9
3.1 MODEL INPUT AND TEMPERATURE RISE 9
4.0 LOCATION OF UNIT 10
4.1 GENERAL GUIDELINES 10
4.2 OTHER CONSIDERATIONS 10
4.3 INSTALLATION IN UPFLOW, DOWNFLOW OR HORIZONTAL POSITIONS 11
4.4 AIR CONDITIONING 12
5.0 COMBUSTIBLE CLEARANCES 12
6.0 DUCTWORK 13
6.1 DUCTWORK STEPS 14
7.0 VENTING AND COMBUSTION PIPING 15
7.1 ACCEPTABLE MATERIALS IN CANADA 15
7.2 ACCEPTABLE MATERIALS IN UNITED STATES 15
7.3 VENT DRAIN OPTION 16
8.0 NON-DIRECT VENT FURNACE INSTALLATIONS USING INDOOR COMBUSTION AIR (ONE PIPE SYSTEM) 17
8.1 DETERMINING COMBUSTION AIR 18
8.1.1 CASE 1: FURNACE LOCATED IN A UNCONFINED SPACE 18
8.1.2 CASE 2: FURNACE LOCATED IN A CONFINED SPACE 18
8.1.3 CASE 3: FURNACE LOCATED IN A CONFINED SPACE, OUTDOOR AIR FROM ATTIC OR CRAWL SPACE 19
8.1.4 CASE 4: FURNACE LOCATED IN A CONFINED SPACE, OUTDOOR AIR DUCTED HORIZONTALLY 19
8.1.5 CONNECTION TO FURNACE NON-DIRECT VENT 20
9.0 VENTING GUIDELINES 21
9.1 VENT TERMINATION 22
9.2 IN CANADA 23
9.3 IN UNITED STATES 23
9.4 FURNACE VENTING INSTALLATIONS 24
9.4.1 NON-DIRECT VENT INSTALLATION USING INDOOR COMBUSTION AIR (ONE PIPE SYSTEM) 24
9.4.2 DIRECT VENT INSTALLATION USING OUTDOOR COMBUSTION AIR (TWO PIPE SYSTEM) 24
9.4.3 COMBUSTION AIR 24
10.0 TERMINATIONS 25
10.1 COMBUSTION AIR 25
10.2 EXHAUST 25
10.3 CONCENTRIC VENTING KIT 25
10.4 CONCENTRIC VENT TERMINATION INSTALLATION INSTRUCTIONS 25
10.5 LOCATION 25
10.6 MULTIPLE VENTING 26
11.0 ROUTING OPTIONS 29
11.1 CONDENSATE DRAINS 29
11.2 PREPARATIONS FOR VENT AND DRAINING OPTION 29
11.3 EXHAUSTER ROTATION INSTRUCTIONS & PRESSURE SWITCH MOUNTING 30
11.4 DRAIN HOSE INSTALLATION 37
11.4.1 DRAIN PIPING 37
11.4.2 PRIMING CONDENSATE TRAP 38
11.5 ALTERNATE CONDENSATE DRAIN PIPING INSTALLATION USING PVC OR CPVC 39
11.6 CONDENSATE NEUTRALIZERS 39

12.0 GAS SUPPLY AND PIPING 40
12.1 GAS SUPPLY 40
12.2 GAS PIPING 40
12.3 GAS INLET PRESSURE 41
12.4 LEAK TESTING 41
12.5 PURGING GAS LINES 41
13.0 CONVERSIONS 42
13.1 HIGH ALTITUDE CONVERSION 42
13.2 NATURAL TO LP GAS 42
13.3 CONVERSION STEPS 42
13.4 CHECKING THE INLET GAS PRESSURE 42
13.5 SETTING THE MANIFOLD GAS PRESSURE 43
13.6 CHECKING FURNACE INPUT 44
30. 44
14.0 ELECTRICAL SPECIFICATIONS 45
14.1 ELECTRICAL WIRING AND CONNECTIONS 45
14.2 FURNACE CONNECTION 46
15.0 LOW VOLTAGE WIRING 47
15.1 THERMOSTAT LOCATION 47
15.2 FURNACE PAIRED WITH HEAT PUMP 47
16.0 OPTIONAL ACCESSORIES (FIELD SUPPLIED/INSTALLED) 48
16.1 ELECTRONIC AIR CLEANER 48
16.2 POWER HUMIDIFIER 48
17.0 STARTUP PROCEDURES 48
17.1 TO START THE FURNACE 49
17.2 TO SHUT DOWN THE FURNACE 49
17.3 SEQUENCE OF OPERATION 49
18.0 AIR FLOW 50
18.1 TEMPERATURE RISE CHECK 50
18.2 CALCULATING AIR FLOW 50
18.3 BLOWER AIRFLOW 51
18.4 CONTINUOUS FAN OPERATION 52
19.0 MAINTENANCE AND TROUBLESHOOTING 53
19.1 AIR FILTER 53
19.2 LUBRICATION 53
19.3 CLEANING 54
19.4 TROUBLESHOOTING FLOWCHART 57
19.5 DIAGNOSTIC CODES FOR STATUS LED 58
19.6 FAULT CODE HISTORY 58
20.0 WIRE DIAGRAM FOR SINGLE STAGE FURNACE 59
20.1 SINGLE STAGE FURNACE WITH CONSTANT TORQUE MOTOR 60
21.0 WARRANTY 61
22.0 REPLACEMENT PARTS LIST 62
23.0 SERVICE HISTORY 64

NOTE: Changes, other than editorial, are denoted by a vertical line in the margin.

***IMPORTANT*:**
PLEASE READ THIS MANUAL CAREFULLY AND KEEP IN A SAFE PLACE FOR FUTURE REFERENCE BY A SERVICE TECHNICIAN.

H1.22

This manual is for the:

WPX-N Series (WPX030S2AA-N / WPX040S2AA-N / WPX060S3AA-N / WPX080S3AA-N WPX100S5BA-N)

These models may be referenced according to their input (K/Btu/hr) in some figures (i.e. 30 / 40 / 60 / 80 / 100).

1.0 INTRODUCTION

This high efficient gas fired single stage condensing furnace is an upflow, downflow, horizontal left and right warm air furnace suitable for residential and light commercial heating applications with inputs from 30,000 to 100,000 Btu/hr.

This high efficient furnace series is CSA certified as a Category IV indirect or direct vent central forced air furnace. When installed as a direct vent furnace, all combustion air is supplied to the furnace burners through the air intake system. *(See Section 7, "Ventilation and Combustion Piping.")*

All models may be fired by natural or LP gas (propane), and may be field converted from natural gas to LP gas using Conversion Kit W370-0018.

The furnace is shipped completely assembled except for the condensate drain trap assembly and the furnace upper door. Please inspect for damage when the furnace is unpacked.

H4.0.8A

2.0 SAFETY SYMBOLS AND WARNINGS

Understand and pay particular attention to the words DANGER, WARNING, and CAUTION and the following defined symbols are used throughout this manual to notify the reader of potential hazards of varying risk levels.

⚠ DANGER ⚠

INDICATES AN IMMINENTLY HAZARDOUS SITUATION WHICH, IF NOT AVOIDED, WILL RESULT IN DEATH OR SERIOUS INJURY.

⚠ WARNING ⚠

INDICATES A POTENTIALLY HAZARDOUS SITUATION WHICH, IF NOT AVOIDED, COULD RESULT IN DEATH OR SERIOUS INJURY.

⚠ CAUTION ⚠

INDICATES A POTENTIAL HAZARDOUS SITUATION WHICH, IF NOT AVOIDED, MAY RESULT IN MINOR OR MODERATE INJURY. IT MAY ALSO BE USED TO ALERT AGAINST UNSAFE PRACTICES.

H3.3.1

IMPORTANT:
READ THE FOLLOWING INSTRUCTIONS COMPLETELY BEFORE INSTALLING!

H6.0

⚠ WARNING ⚠

IF THE INFORMATION IN THESE INSTRUCTIONS IS NOT FOLLOWED EXACTLY, A FIRE OR EXPLOSION MAY RESULT, CAUSING PROPERTY DAMAGE, PERSONAL INJURY OR LOSS OF LIFE.

FOR YOUR SAFETY

DO NOT STORE OR USE GASOLINE OR OTHER FLAMMABLE VAPORS AND LIQUIDS, OR OTHER COMBUSTIBLE MATERIALS IN THE VICINITY OF THIS OR ANY OTHER APPLIANCE.

WHAT TO DO IF YOU SMELL GAS

- **DO NOT TRY TO LIGHT ANY APPLIANCE.**
- **DO NOT TOUCH ANY ELECTRICAL SWITCH; DO NOT USE ANY PHONE IN YOUR BUILDING.**
- **IMMEDIATELY CALL YOUR GAS SUPPLIER FROM A NEIGHBOR'S PHONE, OR A CELLULAR PHONE FROM A LOCATION WELL AWAY FROM THE BUILDING. FOLLOW THE GAS SUPPLIER'S INSTRUCTIONS.**
- **IF YOU CANNOT REACH YOUR GAS SUPPLIER, CALL THE FIRE DEPARTMENT.**
- **DO NOT RE-ENTER THE BUILDING UNTIL AUTHORIZED TO DO SO BY THE GAS SUPPLIER OR THE FIRE DEPARTMENT.**

IMPROPER INSTALLATION, ADJUSTMENT, ALTERATION, SERVICE OR MAINTENANCE CAN CAUSE INJURY, PROPERTY DAMAGE OR LOSS OF LIFE. REFER TO THIS MANUAL.

INSTALLATION AND SERVICE MUST BE PERFORMED BY A QUALIFIED INSTALLER, SERVICE AGENCY OR THE GAS SUPPLIER.

H3.3A

⚠ WARNING ⚠

THESE INSTRUCTIONS ARE INTENDED AS AN AID TO QUALIFIED SERVICE PERSONNEL FOR PROPER INSTALLATION, ADJUSTMENT AND OPERATION OF THIS FURNACE. READ THESE INSTRUCTIONS THOROUGHLY BEFORE ATTEMPTING INSTALLATION OR OPERATION. FAILURE TO FOLLOW THESE INSTRUCTIONS MAY RESULT IN IMPROPER INSTALLATION, ADJUSTMENT, SERVICE OR MAINTENANCE, POSSIBLY RESULTING IN FIRE, ELECTRICAL SHOCK, CARBON MONOXIDE POISONING, EXPLOSION, PROPERTY DAMAGE, PERSONAL INJURY OR DEATH.

H3.4

⚠ WARNING ⚠

CARBON-MONOXIDE POISONING HAZARD

FAILURE TO FOLLOW INSTRUCTIONS COULD RESULT IN SEVERE PERSONAL INJURY OR DEATH DUE TO CARBON-MONOXIDE POISONING, IF COMBUSTION PRODUCTS INFILTRATE INTO THE BUILDING.

CHECK THAT ALL OPENINGS IN THE OUTSIDE WALL AROUND THE VENT (AND AIR INTAKE) PIPE(S) ARE SEALED TO PREVENT INFILTRATION OF COMBUSTION PRODUCTS INTO THE BUILDING.

CHECK THAT FURNACE VENT (AND AIR INTAKE) TERMINAL(S) ARE NOT OBSTRUCTED IN ANY WAY DURING ALL SEASONS.

H3.92

2.1 SAFETY RULES

1. Use this furnace only with type of gas approved for this furnace. Refer to the furnace rating plate.
2. Install this furnace only in dry indoor locations (protected from weather).
3. Provide adequate combustion and ventilation air to the furnace space as specified in Section 7 of this manual, *"Ventilation and Combustion Piping."*
4. Combustion products must be discharged outdoors. Connect this furnace to an approved vent system only, as specified in Section 7 of this manual, *"Venting and Combustion Piping."*
5. Never test for gas leaks with an open flame. Use a commercially available soap solution made specifically for the detection of leaks to check all connections as specified in Section 12 of this manual, *"Gas Supply and Piping."*
6. Always install furnace to operate within the furnace's intended temperature-rise range with a duct system, which has an external static pressure within the allowable range, listed on the furnace rating plate, and as specified in Sections 3, 6, and 18 of this manual, *"Furnace Sizing," "Ductwork,"* and *"Airflow."*
7. When a furnace is installed so that the supply ducts carry air circulated by the furnace to areas outside the space containing the furnace, the return air shall also be handled by duct(s) sealed to the furnace casing and terminating outside the space containing the furnace. (Furnace for heating the home located in the attached garage, for example).
8. A gas-fired furnace for installation in a residential garage must be installed so that the burners and ignitor are no less than 18" (457 mm) above the floor. The furnace must be located, or protected to avoid physical damage by vehicles. *(See safety warning).*
9. Wolf Steel furnaces may be used as a construction heater provided that the furnace installation and operation of the appliance complies with the items listed below:

   a) The vent system must be permanently installed per manufacturer's instructions. One hundred percent (100%) outdoor air must be provided for combustion air requirements during construction. This is to minimize the corrosive effects of adhesives, sealers and other construction materials. It also prevents the entrainment of drywall dust into combustion air, which can cause fouling and plugging of furnace components.

   b) Furnace must be operating under thermostatic control. The use of fixed jumpers that will provide continuous heating is not allowed.

   c) Air filters must be installed in the system and replaced or maintained daily during construction.

   d) The return air duct must be provided and sealed to the furnace.

   e) Return air temperature range between 55°F (13°C) and 80°F (27°C) must be maintained with no evening setback or shutdown.

   f) The input rate and temperature rise must be set per the furnace rating plate.

   g) The furnace, ductwork and filters are cleaned as necessary to remove drywall dust and construction debris from all HVAC system components and verify furnace operating conditions including ignition, input rate, temperature rise, and venting, according to the manufacturer's instructions after construction is completed.

   h) Furnace doors must be in place on the furnace while the furnace is operating in any mode. Damage or repairs due to failure to comply with these requirements are not covered under the warranty.

H6.7A

2.2 CODES

1. This furnace must be installed:
   a. In accordance with all local codes, by-laws and regulations by those authorities having jurisdiction.
   b. In Canada, this furnace must be installed in accordance with the current CAN/CGA -B149.1 and .2 Natural Gas and Propane, and the National Electric Code (NEC) NFPA 70.
   c. In the United States, this furnace must be installed in accordance with the current ANSI Z223.1 (NFPA 54) National Fuel Gas Code.
2. Electrical connections must be made in accordance with:
   a. Any applicable local codes, by-laws and regulations.
   b. Canada: current edition of CAN/CSA C22.1 and C22.2, Canadian Electrical Code (Part 1 and 2).
   c. United States: current edition of ANSI/NFPA 70, National Electrical Code.

Codes and additional information may be obtained from:

Canadian Standards Association
5060 Spectrum Way
Mississauga, Ontario, L4W 5N6
Phone: (416) 747-4000
website: www.csa.ca

American Gas Association
400 North Capitol Street, NW, Suite 450
Washington DC, 20001
Phone: (202) 824-7000
website: www.aga.org

National Fire Protection Association
1 Batterymarch Park
Quincy, MA, 02169-7471
Phone: (617) 770-3000
website: www.nfpa.org

H6.2

⚠ WARNING ⚠

DO NOT INSTALL THIS FURNACE IN A MOBILE HOME! THIS FURNACE IS NOT APPROVED FOR INSTALLATION IN A MOBILE HOME. DOING SO COULD CAUSE FIRE, PROPERTY DAMAGE, PERSONAL INJURY OR LOSS OF LIFE.

THE FURNACE CONTAINS FOIL COVERED FIBERGLASS INSULATION. INHALATION OF FIBERGLASS PARTICLES IS ASSOCIATED WITH RESPIRATORY DISEASE INCLUDING CANCER.

NATURAL GAS AND PROPANE ARE NORMALLY ODORIZED BY THE FUEL SUPPLIER. IN SOME CASES, THE ODORANT MAY NOT BE PERCEIVABLE. INSTALLATION OF UL AND ULC RECOGNIZED FUEL GAS DETECTORS INSTALLED IN ACCORDANCE WITH THEIR MANUFACTURER'S INSTRUCTIONS IS RECOMMENDED AS AN ADDITIONAL MARGIN OF SAFETY.

THE EXHAUST GASES FROM THIS FURNACE CONTAIN CHEMICALS WHICH ON SOME OCCASIONS MAY INCLUDE CARBON MONOXIDE. CARBON MONOXIDE IS AN ODORLESS, TASTELESS, CLEAR COLORLESS GAS WHICH IS HIGHLY TOXIC. EVEN LOW CONCENTRATIONS ARE SUSPECTED OF CAUSING BIRTH DEFECTS AND OTHER REPRODUCTIVE HARM.

UL AND ULC RECOGNIZED CO DETECTORS ARE RECOMMENDED FOR ALL BUILDINGS EQUIPPED WITH FOSSIL FUEL BURNING APPLIANCES. ALL CO DETECTORS SHOULD BE INSTALLED IN ACCORDANCE WITH THEIR MANUFACTURER'S INSTRUCTIONS AND APPLICABLE LOCAL BUILDING CODES.

FIRE, EXPLOSION OR CARBON MONOXIDE POISONING HAZARD!

FAILURE TO REPLACE WITH PROPER CONTROL COULD RESULT IN FIRE, EXPLOSION OR CARBON MONOXIDE POISONING.

REPLACE GAS VALVE <u>ONLY</u> WITH THE SAME MODEL NUMBER OR AS SPECIFIED BY THE MANUFACTURER.

H3.5

⚠ WARNING ⚠

WHEN THIS FURNACE IS INSTALLED IN A STORAGE GARAGE, IT MUST BE INSTALLED SO THE BURNERS AND IGNITION SOURCE ARE LOCATED NO LESS THAN 18" (457 mm) ABOVE THE FLOOR TO PREVENT THE RISK OF IGNITING FLAMMABLE VAPORS WHICH MAY BE PRESENT IN THE GARAGE.

THE FURNACE MUST BE LOCATED OR PROTECTED TO AVOID PHYSICAL DAMAGE BY VEHICLES.

FAILURE TO HEED THESE WARNINGS CAN CAUSE A FIRE OR EXPLOSION, RESULTING IN PROPERTY DAMAGE, PERSONAL INJURY OR LOSS OF LIFE.

H3.6A

FIGURE 1 - FURNACE DIMENSIONS

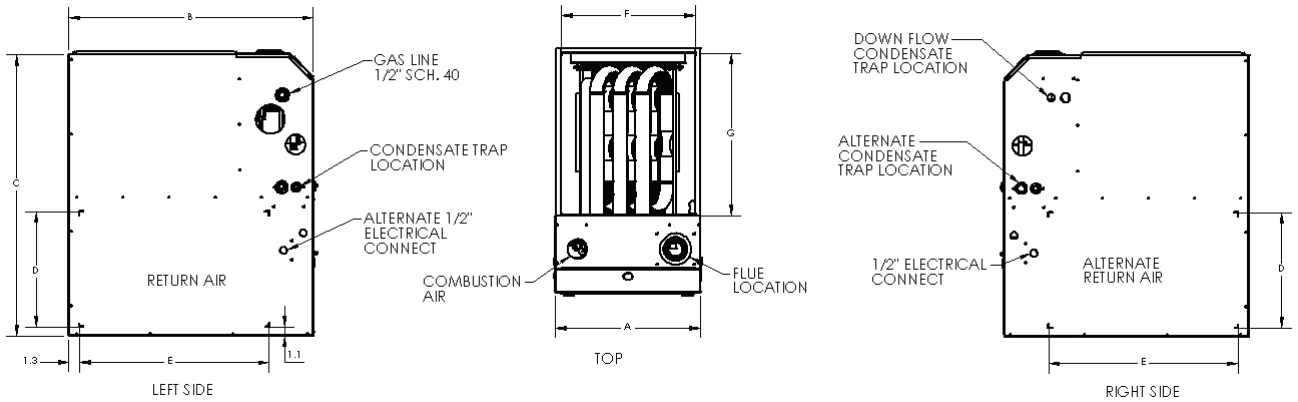

TABLE A - FURNACE DIMENSIONS

INPUT K/Btu/hr	Width A	Depth B	Height C	Supply Air (F x G)	Return Air (D x E)
30	17 1/2" (445mm)	29 1/2" (749mm)	34" (864mm)	16 1/4" x 19 5/8" (413mm x 499mm)	14" x 23" (356mm x 584mm)
40					
60					
80					
100*	22 1/2" (572mm)			21 1/4" x 19 5/8" (540mm x 499mm)	

***NOTE:** If the airflow requirements exceed 1800 cfm, models will require air openings and filters on:
- both sides, OR
- one side and the bottom, OR
- just the bottom

H12.6.14B

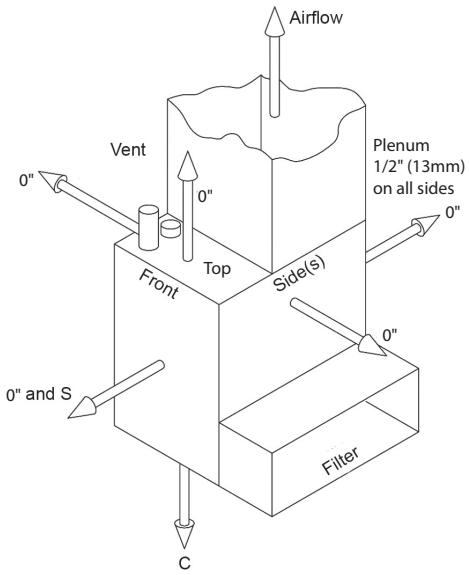

NOTES:
S - Service clearance 24 inches (610mm) or more.
C - Combustible floor (but not carpet or non-ceramic tile).
All models approved for closet installation.

TABLE B - MINIMUM CLEARANCES TO COMBUSTIBLE MATERIALS

	UPFLOW	DOWNFLOW	HORIZONTAL
TOP	0	0	0
PLENUM TOP	1/2" (13mm)	0	1/2" (13mm)
FRONT	0*	0*	0*
BACK	0	0	0
SIDES	0	0	0**
BOTTOM	0***	0	0
FLUE PIPE	0	0	0
ENCLOSURE	CLOSET	CLOSET	CLOSET

*24" (610mm) REQUIRED FOR SERVICE

**SUPPLY AIR OUTLET / 1/2" (13mm) RETURN AIR INLET

***CERTIFIED FOR CLOSET INSTALATION ON COMBUSTIBLE FLOORING.

H12.11.2

3.0 FURNACE SIZING

The maximum hourly heat loss for each heated space shall be calculated in accordance with the procedures described in the manuals of the *Heating, Refrigeration and Air Conditioning Institute of Canada (HRAI)*, or by any other method which is suitable for local conditions, provided the results obtained are in substantial agreement with, and not less than those obtained using the procedure described in their manuals.

In the United States, *"Manual J - Load Calculation,"* published by the Air Conditioning Contractors of America, describes a suitable procedure for calculating the maximum hourly heat loss.

If the installation is a retrofit application, do not rely on the capacity of the existing heating equipment as a method to size the new furnace. Many of the heat transfer multiples listed in earlier versions of load calculation manuals were much higher than those listed in more recent editions. It is possible that energy saving measures have been completed since the installation of the existing furnace. This might include additional insulation in the attic or walls, the application of sprayed foam insulation, the addition of storm windows and doors, weather-stripping, caulking, etc.

Many of the older furnaces were equipped with large belt drive blower systems, operating at low RPM's. If replacing an existing furnace, be sure that the existing ductwork can handle the amount of airflow necessary for a reasonable temperature rise. Most older gas furnaces operated with a system temperature rise of 70 - 100°F (39 - 56°C). This furnace is designed to be operated with a system temperature rise (ΔT) as illustrated in "model input and temperature" section. If the furnace selected has an identical output capacity as the original furnace, a substantial increase in system air flow will be necessary. See section 3.1 and the airflow characteristics in Section 18 of this manual.

Existing ductwork should be assessed for its air handling capabilities.

The *"Equal Friction Chart,"* as published by ASHRAE and HRAI, is the basis for the various air duct calculators available through heating supply companies. Following the air velocity guide lines, according to the *"Equal Friction Chart,"* or a slide rule air duct calculator, a typical 6" (152mm) round duct has a capacity of approximately 100 cfm.

NOTE:
The return air system is equally as important as the supply air system. An under-sized return air system will prevent sufficient quantities of air from reaching the supply air system and will consequently reduce the service life of the furnace and its components.

H7.0.7

3.1 MODEL INPUT AND TEMPERATURE RISE

	INPUT	OUTPUT	DELTA T (°F)
WPX030S2AA-N	30,000	28,500	35-65
WPX040S2AA-N	40,000	38,000	35-65
WPX060S3AA-N	60,000	57,000	40-70
WPX080S3AA-N	80,000	76,000	40-70
WPX100S5BA-N	100,000	95,000	40-70

H12.15.11

4.0 LOCATION OF UNIT

4.1 GENERAL GUIDELINES

1. Select a location where the exhaust and combustion air piping can be routed between the furnace and their terminations with a minimum of lengths and fittings. Be sure to check that the proposed termination location will meet code requirements with respect to location and minimum clearances. *(See venting section for minimum and maximum limits.)*
2. Select a location as near as possible to the existing or proposed duct system.
3. The furnace location must have provisions for condensate drainage. If a suitable drain is unavailable near the furnace, a condensate pump must be used. The condensate pump drain tubing must not terminate outdoors. Be sure to select a condensate pump that has been approved for furnace condensate applications.
4. The furnace location must permit access for servicing and be within the clearance to combustibles guidelines as marked on the appliance rating plate.
5. The furnace must be installed on a level surface. It is recommended that the rear of the furnace be elevated 1/4" (6mm) higher than the front to facilitate proper condensate drainage.
6. If the furnace is being installed so that the return air will enter through the bottom, the perimeter of the furnace must be properly supported.
7. When installed in the horizontal position, the furnace may be supported from the bottom, or suspended. *(Figure 3)*

FIGURE 3 - SUGGESTED METHOD FOR SUSPENDING HORIZONTAL FURNACE

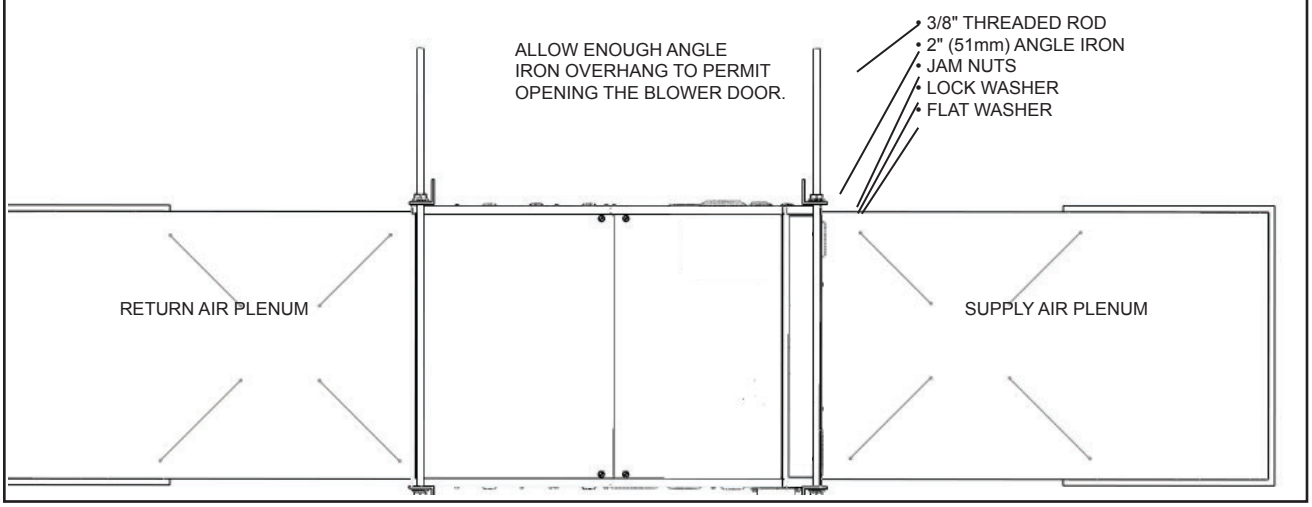

4.2 OTHER CONSIDERATIONS

1. If the furnace is to be located in an area where the combustion air is laden with chemical compounds such as bromine, chlorine or fluorine, as may be found in swimming pool chemicals, laundry detergents, etc., **use outdoor air for combustion**. These compounds when exposed to flame, form acids which attack the heat exchanger and other components.

   Exposure to the following substances in the combustion air supply (but not limited to the following) will also require OUTDOOR AIR for combustion:

   - Aerosols, particularly CFC based or propelled aerosols
   - Air fresheners

- “Airplane Glue” and similar adhesives and cements
- Ammonia, as commonly found in permanent wave solutions used in hair dressing salons
- Anti-static fabric softeners used in clothes dryers
- Carbon tetrachloride
- Chlorinated cleaners and waxes
- Chlorine and bromine based swimming pool chemicals
- De-icing salts or chemicals (rock salt, etc.)
- Dry cleaning fluids such as perchloroethylene
- Fumes from curing polyurethane and similar substances
- Halogen based refrigerants including R-12 and R-22
- Hydrochloric acid, muriatic acid and other acid based masonry washing and curing materials
- Printer’s inks, paint removers, varnishes, varsol, toluene, etc.
- Water softener salt and chemicals

2. If this furnace is to be installed in an area over a finished ceiling or living area, install a field fabricated auxiliary drain pan under the furnace to protect that area from accidental condensate spills. The auxiliary pan should be large enough to collect accidentally spilled condensate from the air conditioning evaporator coil assembly if applicable.
3. If the furnace is installed in an area where freezing may occur, a garage, an attic, a crawl space or any unconditioned space, steps must be taken to protect the condensate trap and drain line from freezing.

H8.2

4.3 INSTALLATION IN UPFLOW, DOWNFLOW OR HORIZONTAL POSITIONS

UPFLOW INSTALLATION: Vent positioning, pressure switch location and drain locations shall be performed in accordance with instructions in the appropriate sections of this manual.

HORIZONTAL INSTALLATION: Vent positioning, pressure switch location and drain locations shall be performed in accordance with instructions in the appropriate sections of this manual.

NON-SUSPENDED INSTALLATION: Maintain clearances to combustibles as outlined in Table B. The furnace must be supported in such a way as to not allow twisting or sagging of the cabinet.

SUSPENDED INSTALLATION: Maintain clearances to combustibles as outlined in Table B. The furnace may be suspended by field fabricating a cradle of angle iron and threaded rod. Secure the furnace with 2” (51mm) minimum slotted angle or equivalent as shown in Figure 3. The furnace must be supported in such a way as to not allow twisting or sagging of the cabinet. Position the supports so as to not interfere with accessing the burner and blower compartments.

DOWNFLOW INSTALLATION: Vent positioning, pressure switch location and drain locations shall be performed in accordance with instructions in the appropriate sections of this manual.

The opening in the floor must provide adequate clearances to the combustible material according to the clearance to combustible as outlined in Table B.

IMPORTANT:

- **THE FURNACE MUST BE INSTALLED ON A LEVEL SURFACE. IT IS RECOMMENDED THAT THE REAR OF THE FURNACE BE ELEVATED 1/4” (6mm) HIGHER THAN THE FRONT TO FACILITATE PROPER CONDENSATE DRAINAGE.**
- **IF THE FURNACE AND AIR CONDITIONER IS LOCATED ABOVE A FINISHED SPACE, INSTALL A DRAIN PAN UNDERNEATH THE UNIT.**

NOTE

This furnace is approved for installation in attics, alcoves, utility rooms, closets and crawl spaces. If this furnace is to be installed in a utility room, be sure that it is located in such a way as to allow access for servicing or the removal of other appliances installed in the room (hot water heater, for example). It is not permissible to use a rear return on this appliance. Use only side and bottom returns.

H8.3.2

4.4 AIR CONDITIONING

This furnace may be used as part of an air conditioning system. The furnace wiring and control system is “air conditioning ready.” There are the following factors to consider:

The air conditioning evaporator coil must be downstream of the heat exchanger. The cooled air passing over the warmer heat exchanger tubes can cause condensation inside the tubes, resulting in corrosion and premature failure.

5.0 COMBUSTIBLE CLEARANCES

Table B provides the certified clearances to combustibles information. Also see the appliance rating plate affixed to the furnace for specific model number, serial number and clearance to combustibles information.

IMPORTANT:
THIS FURNACE REQUIRES A MINIMUM OF 24" (610mm) OF FRONT CLEARANCE FOR SERVICE PURPOSES. FOR THIS PURPOSE, SERVICE CLEARANCE TAKES PRECEDENCE OVER CLEARANCE TO COMBUSTIBLES.

H9.0

⚠ WARNING ⚠

THIS FURNACE IS CERTIFIED FOR INSTALLATION ON COMBUSTIBLE FLOORS. THIS SHALL BE INTERPRETED AS A WOOD FLOOR ONLY. FAILURE TO COMPLY WITH THESE INSTRUCTIONS CAN RESULT IN FIRE, CAUSING PROPERTY DAMAGE, PERSONAL INJURY OR DEATH.

THE FURNACE MUST NOT BE INSTALLED DIRECTLY ON CARPETING, TILE, OR ANY COMBUSTIBLE MATERIAL OTHER THAN WOOD FLOORING.

THE AREA AROUND THE FURNACE MUST BE KEPT CLEAR AND FREE OF ALL COMBUSTIBLE MATERIALS INCLUDING GASOLINE AND OTHER FLAMMABLE VAPORS AND LIQUIDS.

THE HOMEOWNER SHOULD BE CAUTIONED THAT THE FURNACE AREA MUST NOT BE USED AS A CLOSET OR FOR ANY OTHER STORAGE PURPOSE.

H3.97

6.0 DUCTWORK

Proper airflow is required for the correct operation of this furnace. Insufficient airflow may cause erratic operation, could cause the furnace to cycle on the high temperature limit, and may damage the heat exchanger. Excessive airflow may result in an excessively noisy duct system and may result in undesirable consequences such as creating uncomfortable drafts.

If air conditioning is to be used with the furnace, the duct system must be capable of delivering the correct amount of airflow for each system.

The ductwork should be sized and constructed in accordance with accepted industry standards. Duct sizing and construction information may be obtained from:

- A.C.C.A. (Air Conditioning Contractors of America)
- A.S.H.R.A.E. (American Society of Heating, Refrigeration and Air Conditioning Engineers)
- H.R.A.I. (Heating, Refrigerating and Air Conditioning Institute (Canada)
- S.M.A.C.N.A. (Sheet Metal and Air Conditioning Contractors' National Association (United States)

All of the above professional organizations have duct sizing manuals available.

The total static pressure drop of the air distribution system (including filters) should not exceed 1.0" w.c. or that specified on product rating plate.

H10.0A

⚠ WARNING ⚠

DO NOT ALLOW GAS PIPING TO BE ROUTED THROUGH JOIST SPACES THAT ARE USED FOR RETURN AIR PURPOSES. DO NOT USE JOIST SPACES FOR RETURN AIR PURPOSES IF THE JOIST SPACE ALREADY CONTAINS PLUMBING STACKS, CHIMNEY COMPONENTS, ETC. UNLESS THE PORTION USED FOR RETURN AIR PURPOSES CAN BE COMPLETELY ISOLATED FROM PORTIONS WITH OTHER USAGES.

NEVER ALLOW THE PRODUCTS OF COMBUSTION FROM THE FLUE TO ENTER THE RETURN AIR OR SUPPLY AIR DUCTWORK.

ALL RETURN AIR DUCTWORK MUST BE ADEQUATELY SEALED AND SECURED TO THE FURNACE WITH SHEET METAL SCREWS. TAPE THE SHEET METAL SEAMS IN THE VICINITY OF THE FURNACE WITH DUCT TAPE OR SIMILAR MATERIAL.

WHEN THE FURNACE IS MOUNTED ON A PLATFORM WITH RETURN AIR THROUGH THE BOTTOM, IT MUST BE SEALED AIR TIGHT BETWEEN THE FURNACE AND THE RETURN AIR PLENUM. THE FLOOR OR PLATFORM MUST PROVIDE SOUND PHYSICAL SUPPORT OF THE FURNACE WITHOUT SAGGING OR GAPS AROUND THE BASE. IT MUST ALSO BE SEALED BETWEEN THE SUPPORT AND THE BASE.

FAILURE TO PREVENT PRODUCTS OF COMBUSTION FROM BEING CIRCULATED INTO THE LIVING SPACE CAN CREATE POTENTIALLY HAZARDOUS CONDITIONS, INCLUDING CARBON MONOXIDE POISONING THAT COULD RESULT IN PERSONAL INJURY OR DEATH.

H3.8

6.1 DUCTWORK STEPS

1. Position the furnace to minimize ductwork length and fittings.
2. Cut open a return air inlet. The choices are furnace bottom, either side, or any combination thereof (i.e., two sides or a side and the bottom).In all cases, cut the return air opening the full width of the return air markers on the side panel.

⚠ WARNING ⚠
DO NOT USE THE REAR PANEL AS A RETURN AIR INLET. THERE IS INSUFFICIENT ROOM TO PERMIT ADEQUATE AIRFLOW.
DAMAGES, DEFECTS OR FAILURES CAUSED BY CONDITIONED AIR (RETURN AIR) SUPPLIED TO THE FURNACE BEING GREATER THAN 20% FROM OUTDOORS (55°F/13°C MIN. RETURN AIR TEMPERATURE).
SOME HEATING AIR FLOW VALUES MAY BE HIGHER THAN THOSE REQUIRED FOR COOLING. BE SURE TO SIZE DUCT SYSTEM FOR HIGHEST POSSIBLE VALUES.

H3.9

3. Connect the return air duct or filter fitting to the furnace. The connection should be sealed air tight to prevent entraining combustion gases from an adjacent fuel burning appliance, or entraining combustion air for this furnace or adjacent fuel burning appliances.
4. Ensure that there is adequate space and accessibility for air filter removal.
5. If an air conditioning evaporator coil is required, position it on the supply air side of the furnace. Ensure that no air can bypass the evaporator coil. **NOTE:** Furnace must **NOT** be installed downstream of coil.
6. Connect the supply air plenum to the supply air outlet.

FLEXIBLE DUCT CONNECTORS are an effective device to prevent the telegraphing of mechanical noise from the furnace to other parts of the home via the ductwork. If using flexible connectors, ensure that the adjoining duct is independently supported.

NOTE: If the airflow requirements exceed 1800 cfm, models will require air openings and filters on:

- both sides, OR
- one side and the bottom, OR
- just the bottom

H10.2

7.0 VENTING AND COMBUSTION PIPING

⚠ WARNING ⚠

READ, UNDERSTAND AND FOLLOW ALL INSTRUCTIONS IN THIS SECTION. FAILURE TO PROPERLY VENT OR SUPPLY COMBUSTION AIR TO THIS FURNACE CAN CAUSE CARBON MONOXIDE POISONING, OR AN EXPLOSION OR FIRE, RESULTING IN PROPERTY DAMAGE, PERSONAL INJURY OR LOSS OF LIFE.

H3.10

NO 'B' VENT APPLICATIONS ALLOWED.

7.1 ACCEPTABLE MATERIALS IN CANADA

Effective August 1, 2007, all vent piping materials and fittings for flue gas venting must be ULC S636 listed and identified as such on the material. The first 3ft. (900mm) of venting must be readily available for visual inspection. Specified primers and glues of the certified vent system must be from a single system manufacture, and not intermixed with other system manufacture's vent system parts. The components of the certified vent system must not be interchanged with other vent systems, or unlisted pipe, and or fittings. Follow the venting manufacturers instructions on installation, cutting, de-burring, cementing, curing and supporting of the venting system.

Furnace must be vented with ULC S636 certified PVC manufactured by IPEX, and Royal Building Products (GVS-65 & GVS90), or ULC S636 certified PPE manufactured by M&G Duravent.

PVC vent terminations may use concentric kits listed in section 10.3 - or terminate using 45 and 90 degree elbows, or a tee.

PPE venting must terminate using 45 and 90 degree elbows.

Minimum rating of 149 degrees F (65°C).

H11.2

7.2 ACCEPTABLE MATERIALS IN UNITED STATES

Furnace venting may be comprised of:

- Schedule 40 PVC, ASTM D1785 or CSA B137.3
- PVC-DWV, ASTM D2665 or CSA B181.2
- Schedule 40 CPVC, ASTM F441 or CSA B137.6
- PVC PRIMER AND SOLVENT CEMENT: ASTM D2564
- PPE ULC S636 Manufactured by M&G Duravent - must terminate using 45 and 90 degree elbows, or a tee.

Follow piping manufacturers instructions on proper installation of piping and fittings including cutting, deburring, priming, cementing, curing and supporting.

H11.2B

7.3 VENT DRAIN OPTION

A vent drain is recommended when vent passes through any unconditioned space such as an attic or crawl space in order to prevent the accumulation of excess condensate in the inducer housing during operational cycles, refer to images for Vent Drain Option.

To install the vent drain, complete the following steps:

IMPORTANT: Tee, reducer and nipple must be properly cemented together using the appropriate method and materials specified in section 7.0 Venting and Combustion Piping; 7.1 Acceptable Materials in Canada and 7.2 Acceptable Materials in United States.

1. Place a tee of the proper diameter for the vent system being installed 2" (51mm) or 3" (76mm) in the horizontal run or vertical riser closest to the furnace.
2. Place a reducer bushing of proper diameter in the stem portion of the tee. The recommended size for the reducer is 5/8" (15.9mm).
3. Place a piece of 5/8" (15.9mm) diameter pipe that has a minimum length of 3" (76mm) long into the reducer to serve as a nipple.
4. Connect a piece of flexible drain tubing such as EPDM rubber or PVC to the nipple.
5. Loop the drain tubing to provide a trap.
6. Connect the discharge end of the drain tube to the condensate disposal system externally to the furnace.

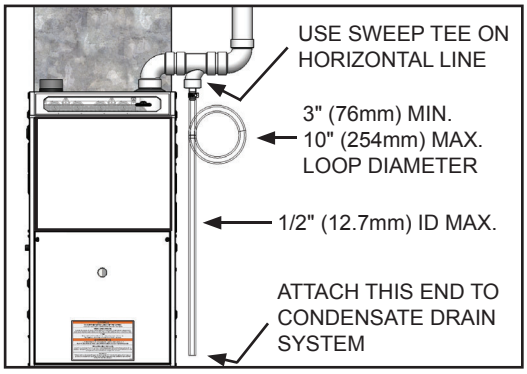

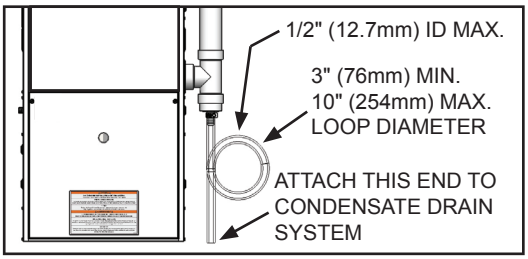

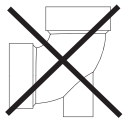

IMPORTANT:
ELBOWS WITH DRAIN PORTS ARE NOT RECOMMENDED, AS CONDENSATE CAN BYPASS THE DRAIN ON THE CURVE.

NOTE: Any increase of venting diameter must be done on the vertical sections NOT horizontal sections.

H11.3A

8.0 NON-DIRECT VENT FURNACE INSTALLATIONS USING INDOOR COMBUSTION AIR (ONE PIPE SYSTEM)

The furnace, although designed as a direct vent type appliance, may be installed with the intake vent inside the structure.

⚠ WARNING ⚠

THIS FURNACE AND ANY OTHER FUEL BURNING APPLIANCE MUST BE PROVIDED WITH ENOUGH FRESH AIR FOR PROPER COMBUSTION AND VENTILATION OF THE FLUE GASES. MOST HOMES WILL REQUIRE THAT OUTSIDE AIR BE BROUGHT TO THE FURNACE AREA. FAILURE TO DO SO CAN CAUSE PERSONAL INJURY, OR DEATH FROM CARBON MONOXIDE POISONING.

H3.11

Adequate provisions for combustion and ventilation air must be in accordance with CAN/CGA-B149 in Canada, and ANSI Z223.1 - 2018, section *"Air for Combustion and Ventilation,"* in the United States. Check with local authorities for any additional building codes bylaws or regulations.

⚠ CAUTION ⚠

AIR FOR COMBUSTION AND VENTILATION PURPOSES MUST NOT ORIGINATE FROM A CORROSIVE ATMOSPHERE. ANY FURNACE FAILURE CAUSED BY CORROSIVE ELEMENTS IS EXCLUDED FROM WARRANTY COVERAGE.

The following types of installation sites (but not limited to the following) will REQUIRE OUTDOOR AIR for combustion because of chemical exposures:

- Commercial buildings
- Buildings with indoor swimming pools
- Furnaces installed in laundry rooms
- Furnaces in hobby or craft rooms
- Furnaces installed near chemical storage areas

Combustion air must be free of acid forming chemicals such as sulphur, fluorine and chlorine. These elements are found in aerosol sprays, detergents, bleaches, cleaning solvents, air fresheners, paint and varnish removers, refrigerants, and many other commercial and household products. When burned in a gas flame, vapors from these products form acid compounds. Acid compounds increase the dew point temperature of the flue products and are highly corrosive after they condense.

H13.0A

8.1 DETERMINING COMBUSTION AIR

8.1.1 CASE 1: FURNACE LOCATED IN A UNCONFINED SPACE

Unconfined space does not necessarily mean that ventilation will not have to be introduced from the outdoors, particularly in airtight homes. The minimum requirement for unconfined space is a volume of 50 cubic feet (1.42 m³) for each 1000 Btu/hr for all fuel burning appliances located within the unconfined area.

If the amount of combustion and ventilation air is insufficient to properly operate the furnace and other fuel burning appliances within the unconfined area, it will be necessary to supply it from the outdoors based on the criteria used when calculating the air supply for a confined space.

NOTE
If planning to use the inside air in an unconfined space, remember to test for proper furnace operation (as well as other fuel burning appliances located within the unconfined space) with respect to adequate combustion and ventilation air with fireplace dampers open, clothes dryer running, bathroom exhaust fans on, kitchen range hood on, etc.

H13.1

8.1.2 CASE 2: FURNACE LOCATED IN A CONFINED SPACE

A confined space, (any space smaller than the minimums discussed in Case 1), must have two air openings; one within 12” (305mm) of the ceiling and the other within 12” (305mm) of the floor. The air openings must be sized considering the method outside air is introduced, whether the combustion and ventilation air is being taken from indoors or outdoors and taking into account any other fuel burning appliances in the confined space.

If sufficient indoor combustion and ventilation air is available for the furnace and all other fuel burning appliances, size each opening on the basis of one square inch (645mm²) of free area per 1000 Btu/hr. *(Figure 4)*

NOTE
Be sure to consider all clothes dryers, bathroom fans, range hoods, etc., when making this calculation.

The minimum requirement for these openings is 100 square inches (645mm²), even for the furnace models under 100,000 Btu/hr.

NOTE
If using grills to cover the two openings, factor in the free area of the grill. Typically, a sidewall grill will have a free area approximately 50% of its nominal size. Consequently, if the required opening is 10" x 10" (254mm x 254mm), it will have to be doubled if using a sidewall grill with 50% free area.

FIGURE 4 - COMBUSTION/DILUTION AIR FROM HEATED INSIDE SOURCES (CASE 2)

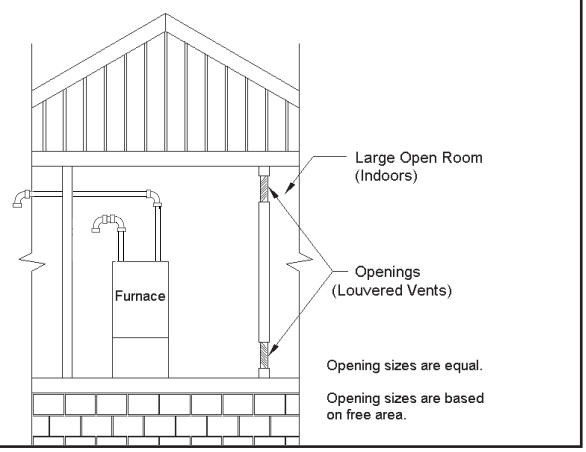

IMPORTANT:
IF AN EXHAUST FAN, FIREPLACE, CLOTHES DRYER OR ANY SIMILAR DEVICE IS PRESENT IN THE INDOOR AREA FROM WHICH THE COMBUSTION AND VENTILATION AIR WILL BE DRAWN, NEGATIVE PRESSURE COULD BE A PROBLEM IF NATURAL INFILTRATION FROM THE OUTDOORS DOES NOT MATCH THE RATE AT WHICH AIR IS EXHAUSTED.

H13.2D

8.1.3 CASE 3: FURNACE LOCATED IN A CONFINED SPACE, OUTDOOR AIR FROM ATTIC OR CRAWL SPACE

In this circumstance, the free area of each of the two combustion and ventilation air openings is based on a minimum of 1 square inch (645mm²) per 4000 Btu/hr. In this configuration, one opening can originate from the floor drawing combustion and ventilation air from the ventilated crawl space.

The other opening may communicate freely with the ventilated attic. If using the attic air, ensure that the opening is ducted from the ceiling high enough to be above the insulation. The attic must be adequately vented with soffit vents or gable vents *(Figure 5).*

As an alternative to creating an opening in the floor to draw air from a crawl space, a duct may be dropped from the attic terminating 12” (305mm) above the floor.

The following table shows minimum free areas and round pipe sizes when drawing combustion air vertically from the attic or crawl space for the furnace only. If other fuel burning appliances are present, their combustion air and ventilation air requirements must be added to those of the furnace.

FIGURE 5 - OUTSIDE AIR FOR COMBUSTION, ATTIC OR CRAWL SPACE (CASE 3)

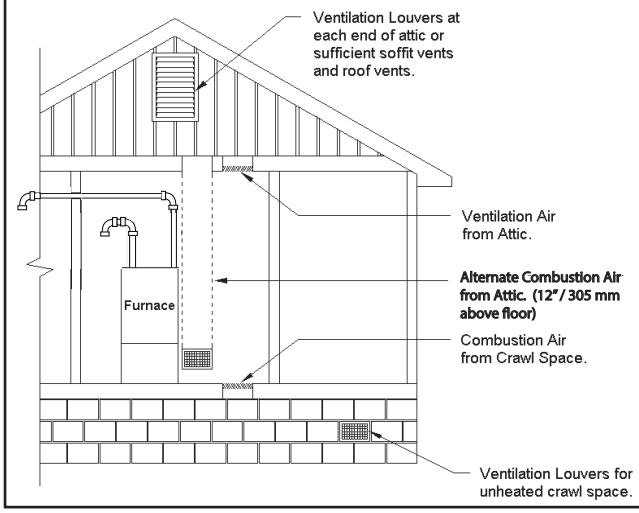

TABLE 2 - VERTICAL AIR SUPPLY (CASE 3)

Input K/Btu/hr	Free Area Ea. Opening	Round Pipe Size
30	15 in.² (97cm²)	5 in. (127mm)
40		
60		
80	20 in.² (129cm²)	6 in. (152mm)
100	25 in.² (161cm²)	

H12.16.8

IMPORTANT:
IF THE ATTIC HAS AN EXHAUST FAN (POWER VENT), IT MAY CREATE A NEGATIVE PRESSURE SUFFICIENTLY LARGE ENOUGH TO PREVENT THE ATTIC FROM BEING AN EFFECTIVE SOURCE OF COMBUSTION AND VENTILATION AIR. POWERED ATTIC FANS DO NOT CUSTOMARILY RUN DURING THE HEATING SEASON; HOWEVER, SOME ARE CONTROLLED BY A HUMIDISTAT AS WELL AS A THERMOSTAT, WHICH MAY ALLOW SOME OPERATION DURING THE HEATING SEASON. THE CHOICES ARE (A) USE THE DIRECT VENT OPTION; (B) OBTAIN OUTDOOR AIR FROM ELSEWHERE; OR (C) INTERLOCK THE ATTIC EXHAUST FAN WITH THE FURNACE SUCH THAT THE TWO CANNOT OPERATE SIMULTANEOUSLY.

H13.3C

8.1.4 CASE 4: FURNACE LOCATED IN A CONFINED SPACE, OUTDOOR AIR DUCTED HORIZONTALLY

Similar to Case 3, outdoor air for combustion and ventilation may be drawn through horizontal ducting. The free area for each opening is calculated on the basis of a minimum of 1 square inch (645mm²) per 2000 Btu/hr input.

The following table shows minimum free areas and round pipe sizes when drawing combustion air horizontally from the outdoors for the furnace only. If other fuel burning appliances are present, their combustion air and ventilation air requirements must be added to those of the furnace.

FIGURE 6 - OUTDOOR AIR FOR COMBUSTION, HORIZONTAL (CASE 4)

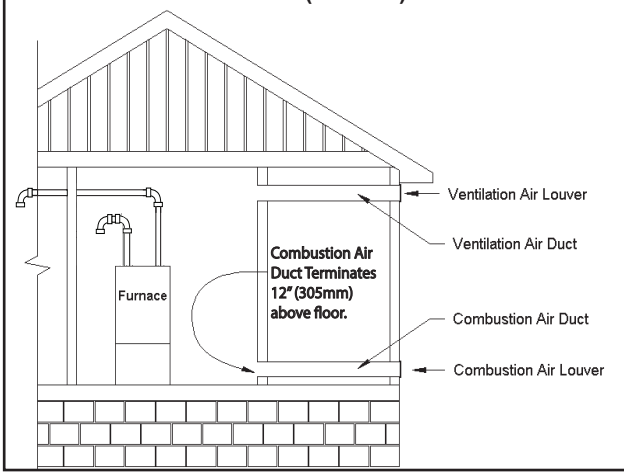

TABLE 3 - HORIZONTAL AIR SUPPLY (CASE 4)

Input K/Btu/hr	Free Area Ea. Opening	Round Pipe Size
30	20 in² (129cm²)	6 in (152mm)
40	30 in² (194cm²)	7 in (178mm)
60		
80	40 in² (258cm²)	8 in (203mm)
100	50 in² (323cm²)	

H12.9.8

IMPORTANT:
THE OUTDOOR GRILLS MUST BE INSTALLED IN A LOCATION WHERE THEY WILL NOT BE OBSTRUCTED IN ANY MANNER.

IMPORTANT:
IF GRILLS ARE USED ON THE OUTSIDE WALL, THEY MUST BE SIZED PROPERLY. MOST SIDEWALL GRILLS HAVE ONLY 50% FREE AREA. IN THE CASE OF A UNIT WITH 100,000 BTU/HR INPUT, WHICH REQUIRES A PAIR OF 8" (203mm) ROUND PIPES TO OBTAIN SUFFICIENT COMBUSTION AND VENTILATION AIR, THE DUCT COULD BE AN EQUIVALENT RECTANGULAR DUCT; 8" X 7" (203mm X 178mm) FOR EXAMPLE. BASED ON 50% FREE AREA FOR THE INLET GRILLS, THE ACTUAL GRILL SIZE WOULD HAVE TO BE 14" X 8" (356mm X 203mm) OR ITS EQUIVALENT. A TRANSITION MAY BE USED TO REDUCE TO THE SMALLER DUCT SIZE IF NECESSARY.

H13.4C

8.1.5 CONNECTION TO FURNACE NON-DIRECT VENT

IMPORTANT:
WHEN USING INDOOR AIR OR THE NON-DIRECT VENT CONFIGURATION, THE COMBUSTION AIR INLET TO THE FURNACE MUST BE PROTECTED FROM BLOCKAGE. USE A DOUBLE ELBOW ARRANGEMENT IF SUPPLYING COMBUSTION AIR THROUGH THE TOP, OR A DOWNWARD POINTING SINGLE ELBOW IF SUPPLYING COMBUSTION AIR THROUGH THE SIDE. *(FIGURE 7)*

FIGURE 7 - NON-DIRECT COMBUSTION AIR INLET

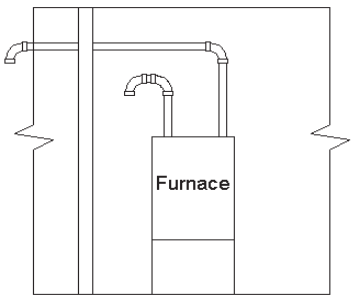

H13.5C

9.0 VENTING GUIDELINES

⚠ CAUTION ⚠

FAILURE TO FOLLOW ALL VENTING GUIDELINES MAY RESULT IN ERRATIC FURNACE OPERATION, FREEZE-UP OF THE EXHAUST AIR PIPING, OR SOOTING OF THE FURNACE.

⚠ WARNING ⚠

READ AND FOLLOW ALL INSTRUCTIONS IN THIS SECTION. FAILURE TO PROPERLY VENT THIS FURNACE CAN CAUSE CARBON MONOXIDE POISONING OR AN EXPLOSION OR FIRE RESULTING IN PROPERTY DAMAGE, PERSONAL INJURY OR LOSS OF LIFE.

H3.12

NOTE

- For 80KBTU small cabinet and 120KBTU large cabinet furnaces it is recommended to install the air intake on the side of the furnace for ideal supply of combustion air.
- Combustion air intake and exhaust termination should be inspected periodically to ensure they are clear of obstructions. i.e. vegetation, debris, snow, etc.
- • **Accumulation of snow around the combustion air intake and exhaust termination may have negative effects on appliance operation and/or performance. Snow accumulation should be considered when locating combustion air intake and exhaust terminations.**

IMPORTANT:

- CLEAN AND DE-BURR ALL PIPE CUTS (INCLUDING UNCUT VENT LENGTHS). THE SHAVINGS MUST NOT BE ALLOWED TO BLOCK THE EXHAUST, COMBUSTION AIR INLET OR CONDENSATE DRAIN LINES.
- IF THE PIPE AND FITTINGS ARE TO BE OTHER THAN PVC, USE THE PROPER CLEANER, PRIMER AND CEMENT FOR THE DISSIMILAR MATERIALS.
- THE EXHAUST VENT MUST BE SUPPORTED APPROPRIATELY PRIOR TO IT BEING FITTED TO THE EXHAUSTER. **UNDER NO CIRCUMSTANCES SHALL THE EXHAUSTER BEAR ANY WEIGHT OF THE VENTING SYSTEM.**

- Venting may be vertical or horizontal.
- Minimum vent length - 15 total equivalent feet (4.6m). *(See Venting Table)*
- Horizontal piping must slope back towards the furnace at a minimum rate of 1/4" to the foot (18mm per meter), so that condensate drains towards the furnace.
- Horizontal runs must be supported at least every 5 feet (1.524m). Horizontal sections must not dip or sag.
- All vent runs through unconditioned space where freezing might occur should be insulated with “arm-a-flex”, “rub-a-tex” or equivalent as long as there is no heat tape applied to the vent pipe. For horizontal runs where water may collect, wrap the vent pipe with self regulating 3 or 5 watt heat tape. The heat tape must be CSA, UL, or ULC listed and installed per the manufacturer’s instructions. **This includes travel through unconditioned attic space.**
- DO NOT COMMON VENT WITH ANY OTHER APPLIANCE.
- If venting vertically, do not vent up a chimney serving another appliance or install in a chase with a metal or high temperature plastic pipe from another gas or fuel burning appliance unless the required clearances to combustibles can be maintained between the furnace venting system and other pipes.

It is recommended that an offset is created (2 x 45°s) in the vertical exhaust vent piping to reduce the risk of flooding the exhauster with excessive vent condensate run down.

All exhaust piping must be installed in accordance with CAN/CGA-B149.in Canada; the latest edition of National Fuel Gas Code, NFPA 54 / ANSI Z223.1 in the United States, as well as in accordance with local codes.

Size the combustion air and exhaust piping in accordance with Table 4. When calculating allowable vent lengths, be sure to count all termination fittings in addition to counting the concentric vent as a straight pipe.

FIGURE 8A - STANDARD (STRAIGHT) HORIZONTAL VENT DETAIL

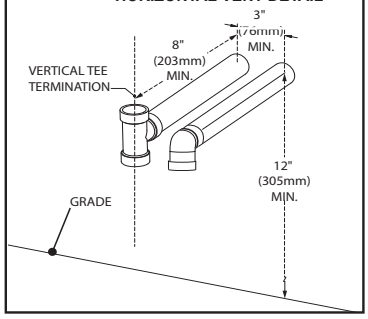

FIGURE 8B - STANDARD (STRAIGHT) HORIZONTAL VENT DETAIL

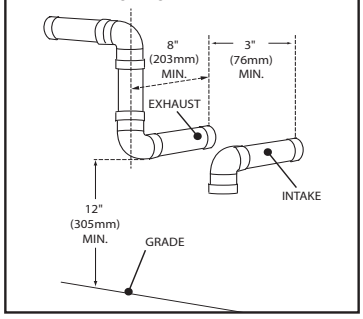

The periscope vent (Figure 9), must be used in extreme cold climates defined as; -22°F (-30°C) sustained for 48 hours or more.

Take the building orientation and the presence of other buildings or other nearby structures into consideration when planning the venting system location. Certain external structures could create air turbulence around the vent termination leading to downdrafts and similar venting problems. In windy and hill locations, roof venting may improve operations. Maximum venting length is based on 30 mph (48 km) winds, areas where higher gusts are dominant it is suggested to shorten the horizontal vent length.

When installing the furnace with direct venting, the vent and combustion air intake shall be installed so that both are located in the same wind pressure zone.

⚠ WARNING ⚠

DO NOT CONNECT FURNACE TO A CHIMNEY OR FLUE SERVING OTHER APPLIANCES OR A SOLID FUEL BURNING APPLIANCE.

H3.13

H14.0C

9.1 VENT TERMINATION

Horizontal vents should pass through the exterior wall. Figure 8 shows a standard horizontal vent detail. Terminate the vent 8” (203mm) or more from the wall.

Exterior vent pipe greater than 24” (610mm) should be insulated with 1/2” (13mm) insulation to prevent moisture from freezing within the pipe and accumulating.

Size the exhaust pipe as specified in *Table 4 - Direct and Non-Direct Vent Lengths*. This table lists the maximum allowable length of pipe with respect to the number of 90° elbows used. For the purposes of this calculation, one 90° elbow is equivalent to two 45° elbows.

Avoid locating the terminal in locations where dripping condensate may cause problems such as sidewalks, patios, above planters, near windows where exhaust gases may cause fogging, etc. Avoid locating the termination too close to shrubs and other vegetation. The condensate may stunt or kill them.

EQUIVALENTS

Short Radius Elbow = 7 ft (2.13m)
Standard Radius Elbow = 5 ft (1.52m)
Long Radius Elbow = 3 ft (0.91m)
45 Degree Elbow = 2.5 ft (0.76m)
Tee

Vent lengths that require more than 6-90° elbows, add listed equivalents for every elbow up to the maximum allowable vent length.

TABLE 4 - DIRECT AND NON-DIRECT VENT LENGTHS

Maximum Allowable Length Of Exhaust Or Intake. Minimum Vent Length 15 ft. (4.6 m) or equivalent.

INPUT K/Btu/hr	PIPE SIZE	NUMBER OF 90° ELBOWS							NOTES
		0	1	2	3	4	5	6	
30**	1½	60*	55	50	45	40	35	30	1. Count concentric vent fitting as straight pipe. 2. Use medium or long sweep elbows where possible. 3. One 90° elbow is equivalent to two 45° elbows. 4. For direct vent, the listed lengths are allowed for each vent (intake and exhaust). 5. For non-direct vent, the listed lengths are allowed for exhaust. The intake should have a 1½” or 2” snorkel intake fitting. (Figure 7)
	2,2½	75*	70	65	60	55	50	45	
40**	1½	60*	55	50	45	40	35	30	
	2,2½	75*	70	65	60	55	50	45	
60	1½	60*	55	50	45	40	35	30	
	2,2½	75*	70	65	60	55	50	45	
	3	100*	95	90	85	80	75	70	
80	2,2½	50*	45	40	35	30	25	20	
	3	100*	95	90	85	80	75	70	
100	2,2½	50*	45	40	35	30	25	20	
	3	100*	95	90	85	80	75	70	

NOTE When 1½", 2½” or 3" pipe is used, exit the cabinet with 2" pipe. Reduce or increase immediately after exiting the cabinet on both intake and exhaust.

**** Maximum allowable vent (intake and exhaust) length.***

***** 30 K and 40 K units must be vented with 1½" venting if total run length is to be less than 25 ft. (7.6m).***

H12.4.9

FIGURE 9 - PERISCOPED VENT DETAIL

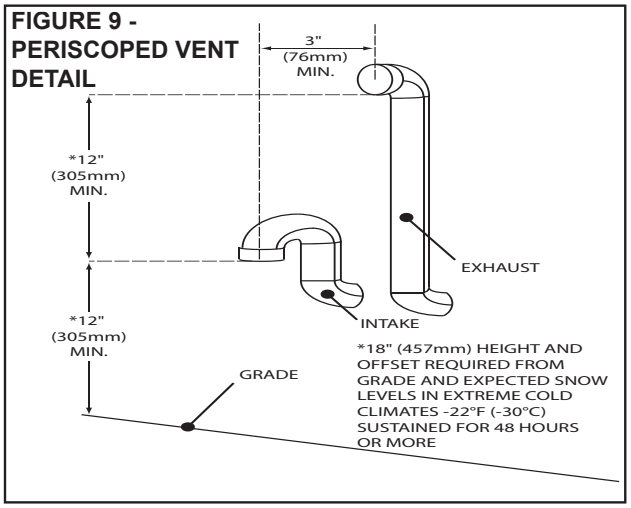

FIGURE 10 - VERTICAL VENTING

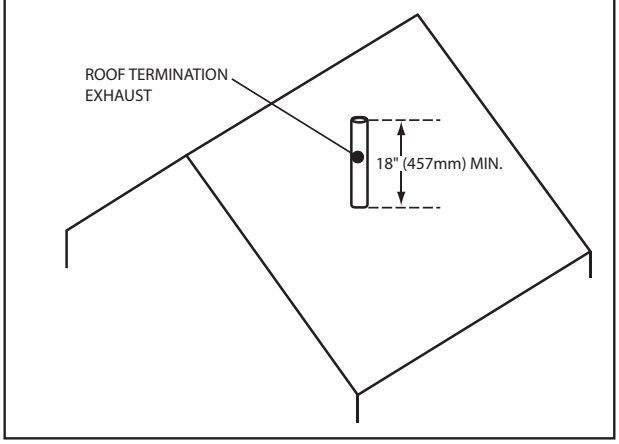

⚠ CAUTION ⚠

MOISTURE IN THE FLUE GASES CONDENSES AS IT LEAVES THE TERMINAL. THIS MOISTURE CAN FREEZE ON EXTERIOR WALLS, ON SOFFITS, AND OTHER NEARBY OBJECTS. SOME DISCOLORATION IS TO BE EXPECTED; HOWEVER, IMPROPER LOCATION OR INSTALLATION CAN CAUSE STRUCTURAL OR EXTERIOR FINISH DAMAGE TO THE BUILDING.

Caulk all cracks, seams or joints within a 6 foot (1.8m) radius of the termination.

Do not terminate under a deck unless there is adequate clearance to prevent damage from the flue gases. A termination may be located at the end of a patio deck. Piping running beneath the deck must be suitably insulated and suspended in a manner to prevent condensate from collecting and freezing.

When locating vent terminations, consideration must be given to prevailing winds, location and other conditions. These conditions may cause recirculation of the combustion products of adjacent vents. Do not locate the terminal on the side of the building facing the prevailing winter winds.

H14.1D

9.2 IN CANADA

In addition to the general guidelines, in Canada, the vent exhaust shall not terminate:

- Directly above a paved sidewalk or paved driveway which is located between two single-family dwellings and serves both dwellings;
- Less than 7 feet (2.1m) above a paved sidewalk or paved driveway located on public property;
- Within 6 feet (1.8m) of a mechanical air supply inlet to any building;
- Above a meter/regulator assembly within 3 feet (.91m) horizontally of the center line of the regulator;
- Within 3 feet (.91m) of any service regulator vent outlet;
- Less than 12” (305mm) above grade level or anticipated snow level;
- Within 12” (305mm) of any door, window, or non-mechanical air supply inlet to any building;
- Within 12” (305mm) of the combustion air inlet of any other appliance;
- Underneath a veranda, porch or deck, unless (a) the veranda, porch or deck is fully open on a minimum of two sides beneath the floor, and (b) the distance between the top of the vent termination and the underside of the veranda, porch or deck is greater than 12” (305mm).

H14.2A

9.3 IN UNITED STATES

In addition to the general guidelines, in the United States, the vent exhaust shall be installed in accordance with the following:

- The clearance from the bottom of the terminal to grade shall be 12” (305mm).
- The vent shall not terminate over public walkways or over an area where condensate or vapor could create a nuisance or hazard.
- The vent terminal shall be installed 4 feet (1.2m) below, 4 feet (1.2m) horizontally from, or 1 foot (305mm) above any door, window, soffit, under eave vent or gravity air inlet to the building.
- The vent terminal shall have a minimum horizontal clearance of 4 feet (1.2m) from electric meters, gas meters, regulators and relief equipment.
- Locate the vent terminal 3 feet (0.91m) above any mechanical air inlet located within 10 feet (3m). Any fresh air or make-up air inlet, such as for a dryer or furnace area is considered a forced air inlet.

The vent terminal should be located no fewer than 3 feet (0.91m) from an inside corner formed by two exterior walls.

Recommended clearance from overhangs is a minimum of 1 foot (0.3m) vertically for each foot horizontally up to 6 feet (1.8m).

H14.3A

9.4 FURNACE VENTING INSTALLATIONS

⚠ WARNING ⚠

READ AND FOLLOW ALL INSTRUCTIONS IN THIS SECTION. FAILURE TO PROPERLY VENT THIS FURNACE CAN CAUSE CARBON MONOXIDE POISONING OR AN EXPLOSION OR FIRE RESULTING IN PROPERTY DAMAGE, PERSONAL INJURY OR LOSS OF LIFE.

H3.14

9.4.1 NON-DIRECT VENT INSTALLATION USING INDOOR COMBUSTION AIR (ONE PIPE SYSTEM)

Non-direct vent installations require only a vent pipe. This may be desirable when using outdoor combustion air is not practical.

- Provisions are not made for routing of combustion air;
- The outdoor environment may contain contaminants undesirable for combustion.
- **Install and secure a 8" (20 cm) piece of intake air pipe with a 90° elbow to prevent objects from entering burner area, and or objects from blocking combustion air intake**.

H14.4A

9.4.2 DIRECT VENT INSTALLATION USING OUTDOOR COMBUSTION AIR (TWO PIPE SYSTEM)

The direct vent configuration is the preferred installation method. The primary advantages are:

- No special kit or modifications are required for direct vent installations
- Dedicated combustion air and vent piping eliminates the need to use already heated air for combustion purposes;
- The probability of corrosive contaminants being present in the combustion air is greatly reduced;
- The direct vent configuration is unaffected by any other appliances, exhaust fans, or other devices that tend to create negative pressure conditions while operating.
- No vents for combustion and ventilation air are required in confined spaces.

H14.5

9.4.3 COMBUSTION AIR

This furnace is certified as a Category IV Type FSP Non-Direct and Direct Vent Furnace. When installed as a direct vent furnace, all combustion air is supplied from the outdoors via the plastic piping system. All components are field supplied, except for the 2” PVC connector used to connect the combustion air piping to the furnace.

The combustion air piping, like the exhaust piping, must be air tight throughout the system. The adapter joining the combustion air to the furnace is supplied with one gasket.

IMPORTANT:

- IF PLANNING TO USE ABS PIPE FOR AIR INTAKE, USE AN ALL-PURPOSE CLEANER AND ABS TO PVC TRANSITION CEMENT. IF PLANNING TO USE CPVC PIPE, USE AN ALL-PURPOSE CLEANER, A CLEAR OR PURPLE PRIMER AND ALL-PURPOSE CEMENT APPROVED FOR THE PURPOSE.
- ADDITIONAL INFORMATION ABOUT CLEANERS, PRIMERS, SOLVENTS AND CEMENTS MAY BE OBTAINED FROM THEIR MANUFACTURERS.
- IF THE FURNACE IS TO BE INSTALLED IN THE VICINITY OF OTHER FUEL BURNING APPLIANCES, ADEQUATE COMBUSTION AIR MUST BE AVAILABLE FOR THE NON-DIRECT VENT APPLIANCES. SEE SECTION 8.1, *“DETERMINING COMBUSTION AIR”.*

H14.6A

10.0 TERMINATIONS

10.1 COMBUSTION AIR

HORIZONTAL - The combustion air termination is made up of a medium or long sweep 90° elbow pointing downward to prevent rain from readily entering the combustion air intake piping.

If the required clearance to grade cannot be obtained with the "straight through" configuration, the combustion air intake pipe may be "periscoped" up to 24" (610mm) to gain extra height *(Figure 9)*

VERTICAL - The combustion air termination is made up of a pair of medium or long sweep 90° elbow pointing downward to prevent rain from entering the combustion air intake piping.

The combustion air inlet must be located a minimum of 12" (305mm) above grade or expected snow level, and 12" (305mm) below the exhaust outlet. *(Figure 11)*

FIGURE 11 - STANDARD VERTICAL VENTING DETAIL

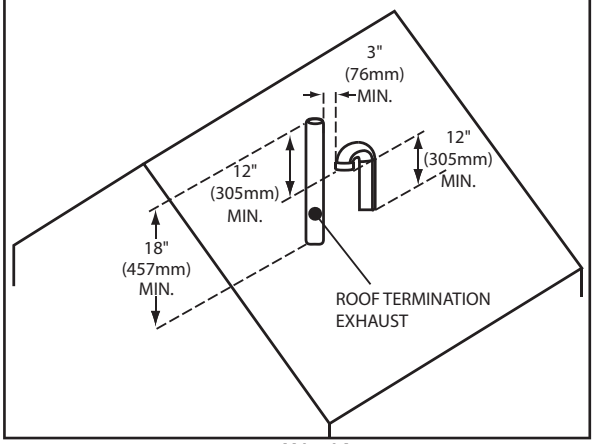

H15.1A

10.2 EXHAUST

HORIZONTAL - The exhaust termination can terminate with a tee, 45° elbow or a medium or long sweep 90° elbow pointing within 45° of the downward position, away from the combustion air intake terminal. Useful for installation in locales with wind load exceeding extreme (high) wind loads.

If the required clearance to grade cannot be obtained with the "straight through" configuration, the exhaust pipe may be "periscoped" up to 24" (610mm) to gain extra height. *(Figure 9)* In this case, the flue gases may be expelled horizontally. Use the same size pipe as the interior run and count the fittings and length as part of the total vent length.

If winter prevailing wind conditions are variable and likely to occasionally blow flue gases back in on the combustion air intake, the exhaust termination may be raised 18-24" (457mm x 610mm) above the combustion air intake terminal to take advantage of the natural buoyancy of the flue gases to help prevent re-circulation of the exhaust. *(Figure 9)*

VERTICAL - No termination fitting is required if venting vertically through a roof. The end of the exhaust pipe must be 12" (305mm) higher than the entrance of the combustion air intake terminal. *(Figure 11)*

The exhaust pipe extending through the roof must extend a minimum of 18" (457mm) above any obstruction within an 18" (457mm) horizontal distance.

Insulate all venting that extends 24" (610mm) or more to the outside.

NOTE: Always clean out exhauster collar after installation. Vent pipe shavings from initial installation can cause blockage in the exhauster collar drain.

H15.2B

10.3 CONCENTRIC VENTING KIT

Concentric venting terminal kits may be used for this series furnace. They provide a means of obtaining combustion air and exhausting products of combustion utilizing a single penetration through the exterior wall. This can be useful when there is limited wall space available. Kits are available in:

- 2" Reference kit #196005 (use with model inputs of 30, 40, 60 and 80) Wolf Steel kit W370-0019
- 3" Reference kit #196006 (use with model inputs of 80, 100 and 120) Wolf Steel kit W370-0020
- Terminals are made by IPEX Inc. See installation instructions for details.

If venting with 1½" vent material, and a concentric vent kit is necessary, a increase coupling may be used to connect to the 2" concentric venting kit. Read the instructions supplied with the kit for additional installation instructions and details. **Straight vertical runs should have offset to push condensate against vent walls.**

H15.3

10.4 CONCENTRIC VENT TERMINATION INSTALLATION INSTRUCTIONS

Follow the concentric vent termination manufacturer instructions for installation of the concentric vent termination kit. These instructions can be found by contacting the furnace manufacture. Furnace manufacturer contact information is found on the front cover of this installation manual and operating instructions.

H15.4

10.5 LOCATION

Avoid locating the terminals where the flue gas could become stagnant and allow recirculation into the combustion air intake.

Avoid locating the terminal in locations where dripping condensate may cause problems such as sidewalks, patios, above planters, near windows where exhaust gases may cause fogging, icing, etc.

Avoid locating the termination too close to shrubs and other vegetation. The condensate may stunt or kill them.

Caulk all cracks, seams or joints within a 6 foot (1.8m) radius of the termination.

Do not terminate under a deck unless there is adequate clearance to prevent damage from the flue gases. A termination may be located at the end of a patio deck. Piping running beneath the deck must be suitably insulated and suspended in a manner to prevent condensate from collecting and freezing.

When locating vent terminations, consideration must be given to prevailing winds, location, and other conditions. These conditions may cause recirculation of the combustion products of adjacent vents. Do not locate the terminal on the side of the building facing the prevailing winter winds.

⚠ CAUTION ⚠

IMPROPER LOCATION OR INSTALLATION CAN RESULT IN STRUCTURAL DAMAGE TO THE BUILDING, DAMAGE TO THE EXTERIOR FINISH OF THE BUILDING, OR MAY ALLOW RECIRCULATION OR FREEZING OF THE FLUE GASES ONTO OR INTO THE COMBUSTION AIR INTAKE.

MOISTURE IN THE FLUE GASES CONDENSES AS IT LEAVES THE TERMINALS. THIS MOISTURE CAN FREEZE ON EXTERIOR WALLS, SOFFITS, AND OTHER NEARBY OBJECTS. SOME DISCOLORATION IS TO BE EXPECTED.

The vent terminal should be located no fewer than 3 feet (.9m) from an inside corner formed by two exterior walls.

Recommended clearance for overhangs is a minimum of 1 foot (.3m) vertically for each foot horizontally up to 6 feet (1.8m).

Any adjacent painted surfaces should be in good condition; no cracks, peeling paint, etc. If wooden surfaces that may be periodically exposed to flue gases are present, consider treating with a sealer.

H15.5A

10.6 MULTIPLE VENTING

IMPORTANT:
WHEN INSTALLING MULTIPLE FURNACES IN CLOSE PROXIMITY, EACH REQUIRES DEDICATED COMBUSTION AIR AND EXHAUST VENTING.

COMMON VENTING IS PROHIBITED!!

If two of these furnaces are to be installed in close proximity, the combustion air intake and exhaust terminations may be installed as shown in Figures 12 and 13.

FIGURE 12 - MULTIPLE VENTING (STANDARD HORIZONTAL)

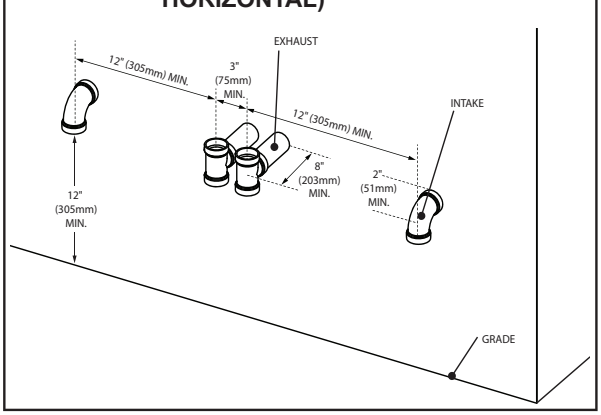

FIGURE 13 - MULTIPLE VENTING (STANDARD VERTICAL)

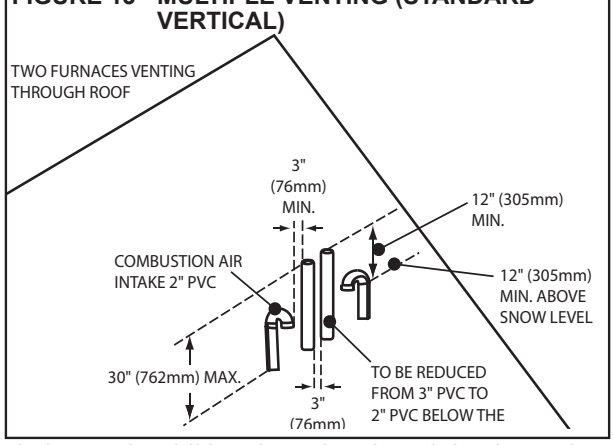

If more than two furnaces are being installed in close proximity, each additional combustion air intake and exhaust termination set shall not terminate less than 12 in (305mm) apart. Note: Canadian installations of 120000 Btu/hr require 3 ft (915mm).

H15.6.3B

⚠ WARNING ⚠

RECIRCULATION OF FLUE GASES MAY OCCUR CAUSING THE INTAKE PIPE TO FREEZE SHUT DURING COLD WEATHER OPERATION IF THE VENTING SYSTEM IS NOT INSTALLED PER THESE GUIDELINES.

H3.15

FIGURE 14A - DIRECT VENT TERMINAL CLEARANCES

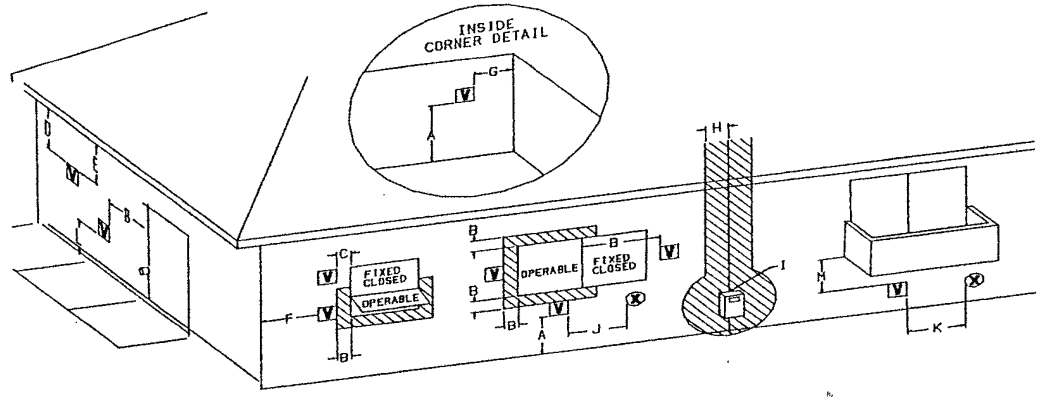

		Canadian Installations1	US Installations2
A=	Clearance above grade, veranda, porch, deck, or balcony	12 inches (30 cm)	12 inches (30 cm)
B=	Clearance to window or door that may be opened	6 inches (15 cm) for appliances ≤ 10,000 Btuh (3 kW), 12 inches (30 cm) for appliances > 10,000 Btuh (3 kW) and ≤ 100,000 Btuh (30 kW), 36 inches (91 cm) for appliances >100,000 Btuh (30 kW)	6 inches (15 cm) for appliances ≤ 10,000 Btuh (3 kW), 9 inches (23 cm) for appliances > 10,000 Btuh (3 kW) and ≤ 50,000 Btuh (15 kW), 12 inches (30 cm) for appliances > 50,000 Btuh (15 kW)
C=	Clearance to permanently closed window	*	*
D=	Vertical clearance to ventilated soffit located above the terminal within a horizontal distance of 2 feet (61 cm) from the center line of the terminal	*	*
E=	Clearance to unventilated soffit	*	*
F=	Clearance to outside corner	*	*
G=	Clearance to inside corner	*	*
H=	Clearance to each side of center line extended above meter/regulator assembly	3 feet (91 cm) within a height 15 feet (4.5 m) above the meter/regulator assembly	*
I=	Clearance to service regulator vent outlet	3 feet (91 cm)	*

		Canadian Installations	US Installations2
J=	Clearance to nonmechanical air supply inlet to building or the combustion air inlet to any other appliance	6 inches (15 cm) for appliances ≤ 10,000 Btuh (3 kW), 12 inches (30 cm) for appliances > 10,000 Btuh (3 kW) and ≤ 100,000 Btuh (30 kW), 36 inches (91 cm) for appliances >100,000 Btuh (30 kW)	6 inches (15 cm) for appliances ≤ 10,000 Btuh (3 kW), 9 inches (23 cm) for appliances > 10,000 Btuh (3 kW) and ≤ 50,000 Btuh (15 kW), 12 inches (30 cm) for appliances > 50,000 Btuh (15 kW)
K=	Clearance to a mechanical air supply inlet	6 feet (1.83 m)	3 feet (91 cm) above if within 10 feet (3 m) horizontally
L=	Clearance above paved sidewalk or paved driveway located on public property	7 feet (2.13 m) †	*
M=	Clearance under veranda, porch deck, or balcony	12 inches (30 cm) ‡	*

1 In accordance with the current *CSA B149.1, Natural Gas and Propane Installation Code*
2 In accordance with the current *ANSI Z223.1/NFPA 54, National Fuel Gas Code*
† A vent shall not terminate directly above a sidewalk or paved driveway that is located between two single family dwellings and serves both dwellings.
‡ Permitted only if veranda, porch, deck, or balcony is fully open on a minimum of two sides beneath the floor.
* For clearances not specified in *ANSI Z223.1/NFPA 54* or *CSA B149.1*, the following statement shall be included:

"Clearance in accordance with local installation codes and the requirements of the gas supplier and the manufacturer's installation instructions."

FIGURE 14B - NON-DIRECT VENT TERMINAL CLEARANCES

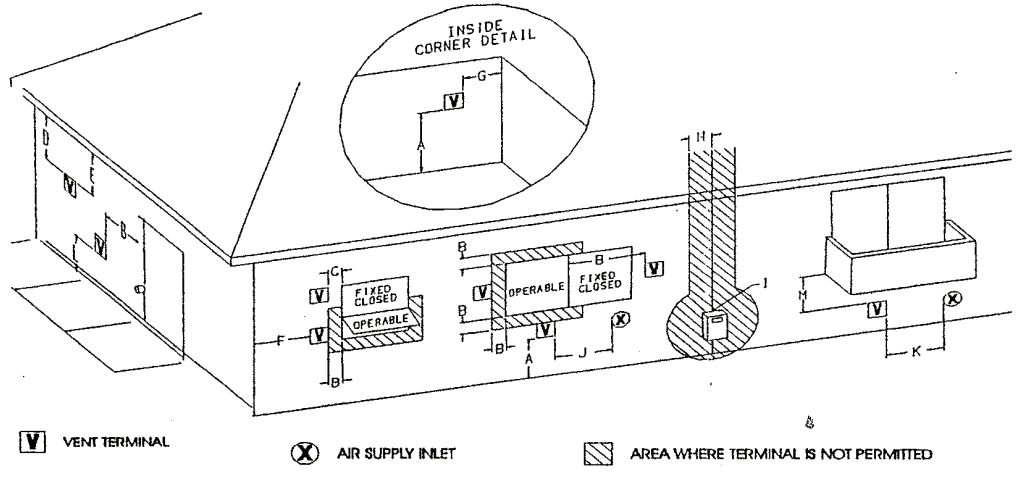

		Canadian Installations1	US Installations2
A=	Clearance above grade, veranda, porch, deck, or balcony	12 inches (30 cm)	12 inches (30 cm)
B=	Clearance to window or door that may be opened	6 inches (15 cm) for appliances ≤ 10,000 Btuh (3 kW), 12 inches (30 cm) for appliances > 10,000 Btuh (3 kW) and ≤ 100,000 Btuh (30 kW), 36 inches (91 cm) for appliances >100,000 Btuh (30 kW)	4 feet (1.2 m) below or to side of opening; 1 foot (300 m) above opening
C=	Clearance to permanently closed window	*	*
D=	Vertical clearance to ventilated soffit located above the terminal within a horizontal distance of 2 feet (61 cm) from the center line of the terminal	*	*
E=	Clearance to unventilated soffit	*	*
F=	Clearance to outside corner	*	*
G=	Clearance to inside corner	*	*
H=	Clearance to each side of center line extended above meter/regulator assembly	3 feet (91 cm) within a height 15 feet (4.5 m) above the meter/regulator assembly	*
I=	Clearance to service regulator vent outlet	3 feet (91 cm)	*

		Canadian Installations	US Installations2
J=	Clearance to nonmechanical air supply inlet to building or the combustion air inlet to any other appliance	6 inches (15 cm) for appliances ≤ 10,000 Btuh (3 kW), 12 inches (30 cm) for appliances > 10,000 Btuh (3 kW) and ≤ 100,000 Btuh (30 kW), 36 inches (91 cm) for appliances >100,000 Btuh (30 kW)	4 feet (1.2 m) below or to side of opening; 1 foot (30 cm) above opening
K=	Clearance to a mechanical air supply inlet	6 feet (1.83 m)	3 feet (91 cm) above if within 10 feet (3 m) horizontally
L=	Clearance above paved sidewalk or paved driveway located on public property	7 feet (2.13 m) †	7 feet (2.13 m)
M=	Clearance under veranda, porch deck, or balcony	12 inches (30 cm) ‡	*

1 In accordance with the current *CSA B149.1, Natural Gas and Propane Installation Code*
2 In accordance with the current *ANSI Z223.1/NFPA 54, National Fuel Gas Code*
† A vent shall not terminate directly above a sidewalk or paved driveway that is located between two single family dwellings and serves both dwellings.
‡ Permitted only if veranda, porch, deck, or balcony is fully open on a minimum of two sides beneath the floor.
* For clearances not specified in *ANSI Z223.1/NFPA 54* or *CSA B149.1*, the following statement shall be included:

"Clearance in accordance with local installation codes and the requirements of the gas supplier and the manufacturer's installation instructions."

11.0 ROUTING OPTIONS

Figures 16 to 20 on the following pages show the allowable installation positions with correct exhauster orientation, condensate drainage, and pressure switch locations. The installer must also consider the following services: gas pipe, electrical power, drain trap, intake and exhaust vents, the air conditioning connections and drain, access to filter(s) and access to furnace and a/c for repair. Drains and traps of furnaces installed in spaces subjected to freezing temperature must also be protected against freezing.

The combustion air inlet fitting is a 2” PVC Socket to Flange adapter. Choose the intake location and remove the appropriate plastic cap. Install the adapter to the outside of the exterior panel using the screws provided (ensure gasket is properly placed between the adapter and the outside of the exterior panel for proper sealing). **Failure to apply gasket on cabinet exterior voids the warranty.**

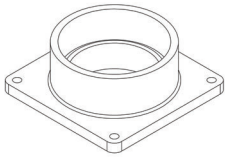

H16.0.1B

11.1 CONDENSATE DRAINS

The furnace may condense as much as 4-1/2 pounds of water per hour (approximately 2 imperial quarts, 2-1/2 U.S. quarts or 2-1/4 liters). It is necessary to make provisions for draining the condensate away. The furnace is supplied with a drain trap assembly. See Figures 16-20 for possible locations of the drain trap.

Affix the condensate trap assembly to the exterior of the side panel of the blower compartment for upflow positions. For horizontal positions affix the condensate trap assembly to the exterior side panels. See Figures 16-20.

Four plastic drain hose clamps are provided in the parts bag. The large ones are used for securing the drain hose to the front manifold cover drain outlet, and securing the drain hose to the 5/8” barbed fitting on the condensate trap assembly. The small one is used to secure the drain hose to the exhauster drain collar and the 1/2” barbed fitting on the condensate trap assembly.

The drain coupling on the exhauster will work better if the drain holes are pointed down about 15 degrees. The drain hose supplied with the furnace is long enough to reach either side panel; however, it must be cut to fit each application. This is to prevent kinking in the drain lines.

NOTE: It is recommended that pliers be used to firmly clamp the plastic hose clamps.

NOTE: The hoses comes connected to the inducer and FMC from manufacturer. Installer must connect hoses to barbed fittings on condensate trap.

H16.2.5

11.2 PREPARATIONS FOR VENT AND DRAINING OPTION

1. Determine the most suitable vent and drain options for installation, see “EXHAUSTER ROTATION INSTRUCTIONS & PRESSURE SWITCH MOUNTING” section.
2. Remove the 3-1/2” plastic exhaust vent cap (if required), and cover vent hole not in use. Install rubber grommet (in parts bag) for 2” vent pipe. Connect vent pipe (field supplied). If using 1-1/2” or 3” vent, make transition as close as possible to the unit and on a vertical section.
3. Connect 2” air intake pipe (field supplied). **The exhaust vent must be supported appropriately prior to it being fitted to the exhauster. Under no circumstances shall the exhauster bear any weight of the venting system.**
4. Remove the plastic air inlet cap and connect the 2” PVC air intake connector with the rubber gasket on the outside of the unit using the 2” lock nut (in parts bag).
5. Remove the two plastic caps attached to the blower division, and the one attached to the side panel if applicable.
6. Affix the condensate trap assembly to the interior or exterior of the side panel in the blower compartment for upflow and downflow positions using the two screws provided in parts bag. For horizontal positions affix the condensate trap assembly to the exterior side panels.

NOTE

- **Condensate drain tubing must be cut to appropriate length and slopping towards condensate trap, ensuring that drain hoses do not create traps prior to the condensate trap assembly.**
- **Condensate trap must be primed with water prior to initial furnace start up.**
- **Barbed fittings must be fully inserted into condensate trap.**

FIGURE 15

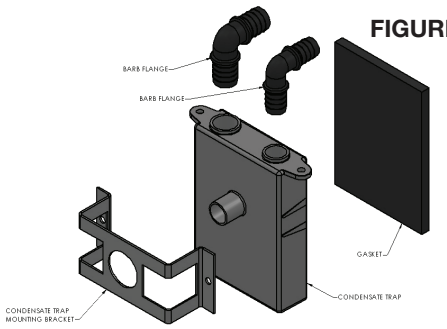

H16.3.4A

11.3 EXHAUSTER ROTATION INSTRUCTIONS & PRESSURE SWITCH MOUNTING

1. Loosen collar clamp and pull up exhaust pipe for adequate clearance.
2. Disconnect exhauster wire connection.
3. Remove the 4 exhauster screws.
4. Remove pressure switch assembly (switches) and front manifold cover pressure sensing hose.
5. Remove exhauster.
6. Reverse the bands on the rubber drain coupling so the screws are accessible if necessary. (Do not reverse the drain coupling). Confirm that directional arrow on drain coupling points away from exhauster.
7. Remove the appropriate plastic cap on the side panel. Install cap on vent opening not in use.
8. Reinstall the exhauster and the pressure switch assembly in the correct orientation with the (4) exhauster screws removed in step 2. **DO NOT USE POWER TOOL.** Reinstall the pressure switches so that they are above the front manifold drain, to eliminate the chance of condensate draining into the pressure switch sensing hose causing erratic furnace operation. See Figures 16-19 for reference.
9. Rotate the drain coupling so the drain holes are angled downward 15° and tighten coupling band to exhauster.
10. Complete the venting as installation requires, mounting the exhaust pipe and tightly secure to collar.

Always secure or support the vent and intake to the floor joists or rafters to avoid sagging and possible fatigue of venting materials. This ensures proper drainage and prevents spilling the products of combustion into the building.

The blower compartment should be completely isolated from the burner compartment, and in tight rooms with other combustion devices, be completely isolated from the room. Ensure that the combustion door gasket is in good condition.

IMPORTANT:
KEEP PRESSURE SWITCH HOSES ABOVE FRONT MANIFOLD DRAIN, AND CUT TO APPROPRIATE LENGTH TO PREVENT ANY SAGS OR TRAPS FORMING IN THE HOSES.

TABLE 5 - EXHAUSTER ORIENTATION

Orientation		Rotate Exhauster (Y/N)	
Furnace	**Flue**		
Upflow	Vertical	N	See Figures 16 - 19 for recommended mounting
Upflow	Left	Y	
Upflow	Right	Y	
Horizontal Left	Left / Top Panel	N	
Horizontal Left	Vertical / Right Panel	Y	
Horizontal Right	Right / Top Panel	N	
Horizontal Right	Vertical / Left	Y	
Downflow	Left	Y	
Downflow	Right	Y	

⚠ WARNING ⚠

THERE MUST NOT BE ANY OPENINGS BETWEEN THE BLOWER DIVISION PANEL AND THE COMBUSTION COMPARTMENT. THE BLOWER COMPARTMENT IS UNDER GREATER SUCTION THAN THE COMBUSTION COMPARTMENT AND CAN PULL COMBUSTION AIR FROM THE BURNERS AND CAUSE INCOMPLETE COMBUSTION AND ERRATIC FURNACE OPERATION.

H3.16

FIGURE 16 - UPFLOW VENT AND DRAINING OPTION

TOP VENT - LEFT DRAIN INSTALLATION (EXTERNAL)

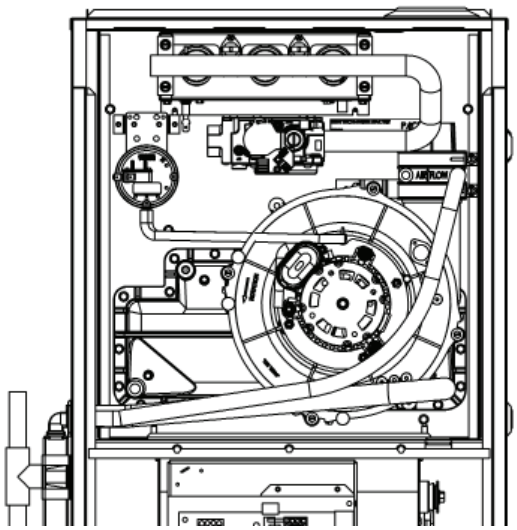

TOP VENT - LEFT DRAIN INSTALLATION (INTERNAL)

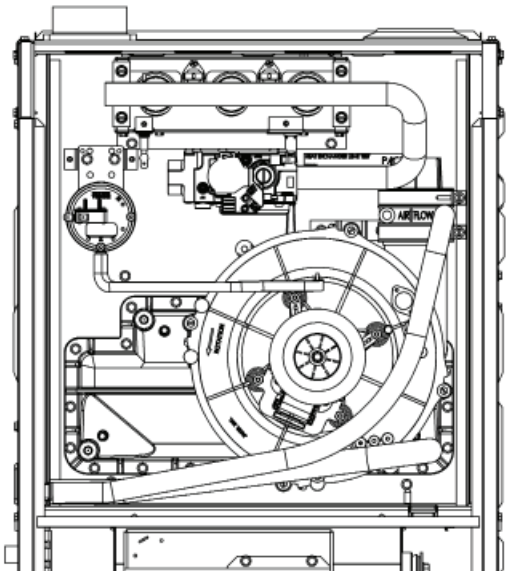

IMPORTANT:

- **PRIME CONDENSATE TRAP WITH WATER AND CUT DRAIN HOSES TO PROPER LENGTH.**
- **CUT PRESSURE SWITCH TUBING TO PROPER LENGTH.**
- **DO NOT SUBMERGE TERMINATION OF DRAIN HOSE.**

FIGURE 16 - UPFLOW VENT AND DRAINING OPTION CONTINUED

TOP VENT - RIGHT DRAIN INSTALLATION (INTERNAL)

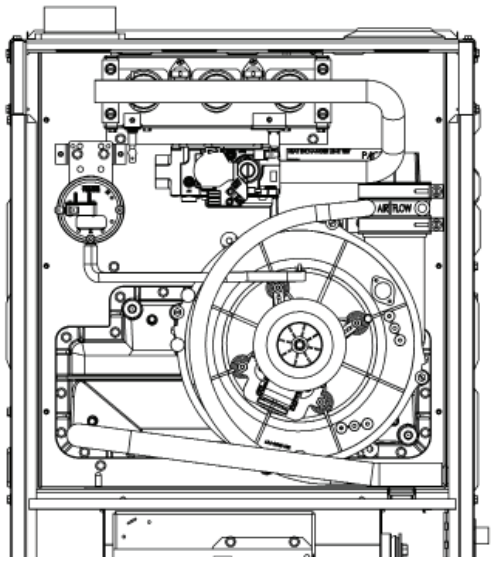

LEFT VENT - LEFT DRAIN INSTALLATION (EXTERNAL)

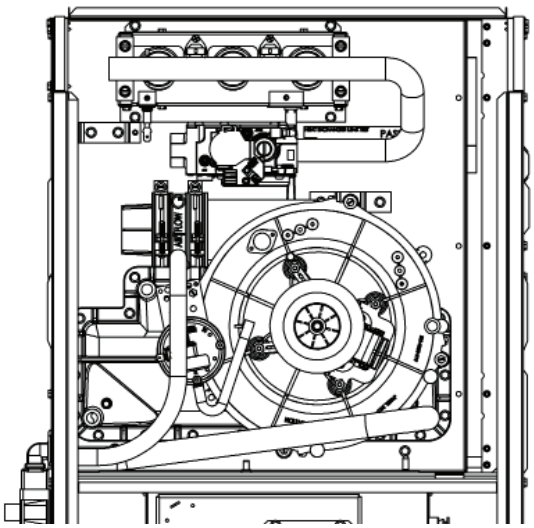

LEFT VENT - LEFT DRAIN INSTALLATION (INTERNAL)

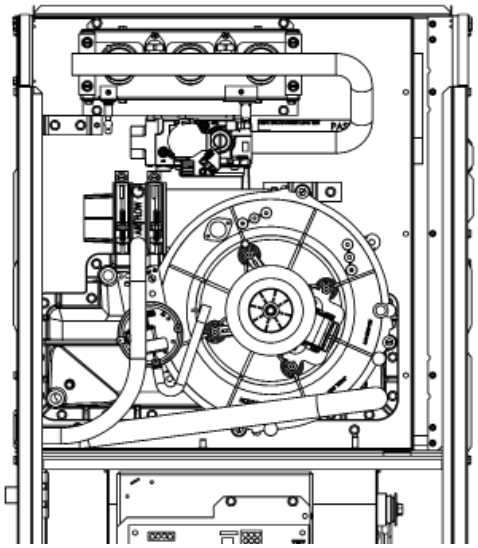

LEFT VENT - RIGHT DRAIN INSTALLATION (INTERNAL)

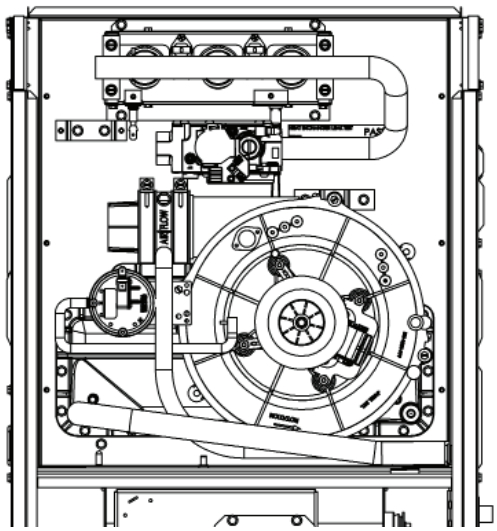

IMPORTANT:

- **PRIME CONDENSATE TRAP WITH WATER AND CUT DRAIN HOSES TO PROPER LENGTH.**
- **CUT PRESSURE SWITCH TUBING TO PROPER LENGTH.**
- **DO NOT SUBMERGE TERMINATION OF DRAIN HOSE.**

FIGURE 16 - UPFLOW VENT AND DRAINING OPTION CONTINUED

RIGHT VENT - LEFT DRAIN INSTALLATION (EXTERNAL)

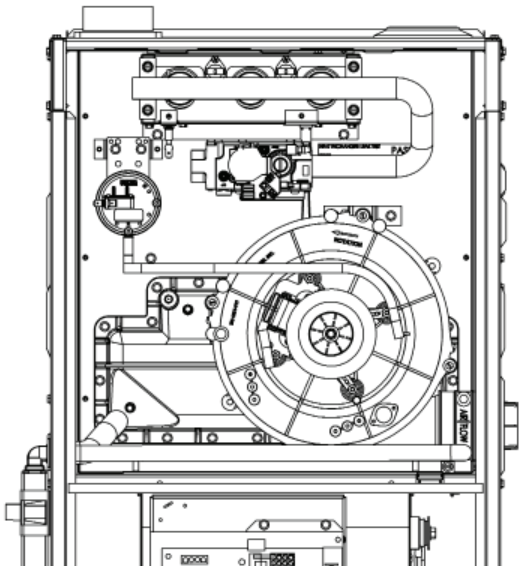

RIGHT VENT - LEFT DRAIN INSTALLATION (INTERNAL)
NOTE: RECOMMENDED FOR IDEAL DRAINING

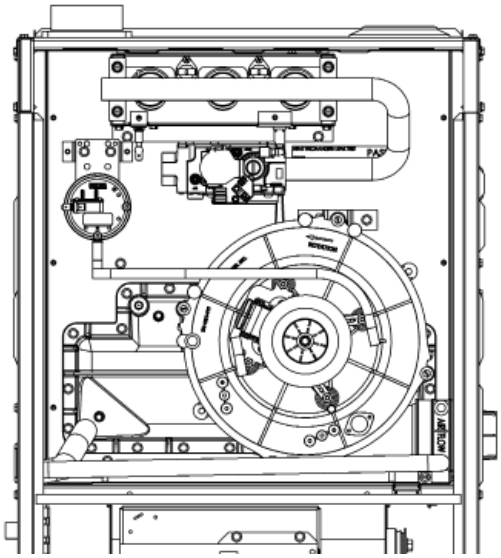

IMPORTANT:

- **ENSURE DRAIN HOSE IS SLOPED DOWN TOWARDS THE CONDENSATE TRAP.**
- **PRIME CONDENSATE TRAP WITH WATER AND CUT DRAIN HOSES TO PROPER LENGTH.**
- **CUT PRESSURE SWITCH TUBING TO PROPER LENGTH.**
- **DO NOT SUBMERGE TERMINATION OF DRAIN HOSE.**

FIGURE 17 - HORIZONTAL LEFT VENT AND DRAINING OPTION

RIGHT (PANEL) VENT INSTALLATION

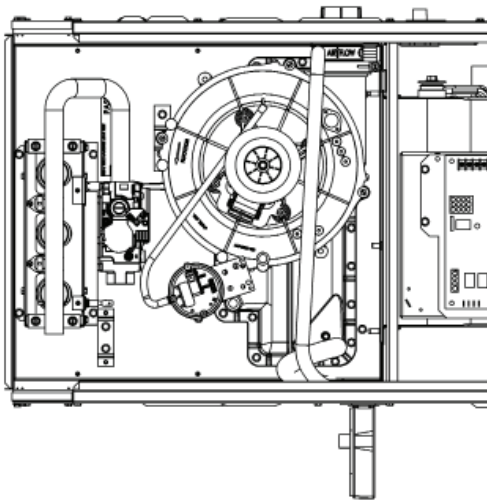

IMPORTANT:

- **PRIME CONDENSATE TRAP WITH WATER AND CUT DRAIN HOSES TO PROPER LENGTH.**
- **CUT PRESSURE SWITCH TUBING TO PROPER LENGTH.**
- **DO NOT SUBMERGE TERMINATION OF DRAIN HOSE.**

FIGURE 17 - HORIZONTAL LEFT VENT AND DRAINING OPTION CONTINUED

TOP (PANEL) VENT INSTALLATION

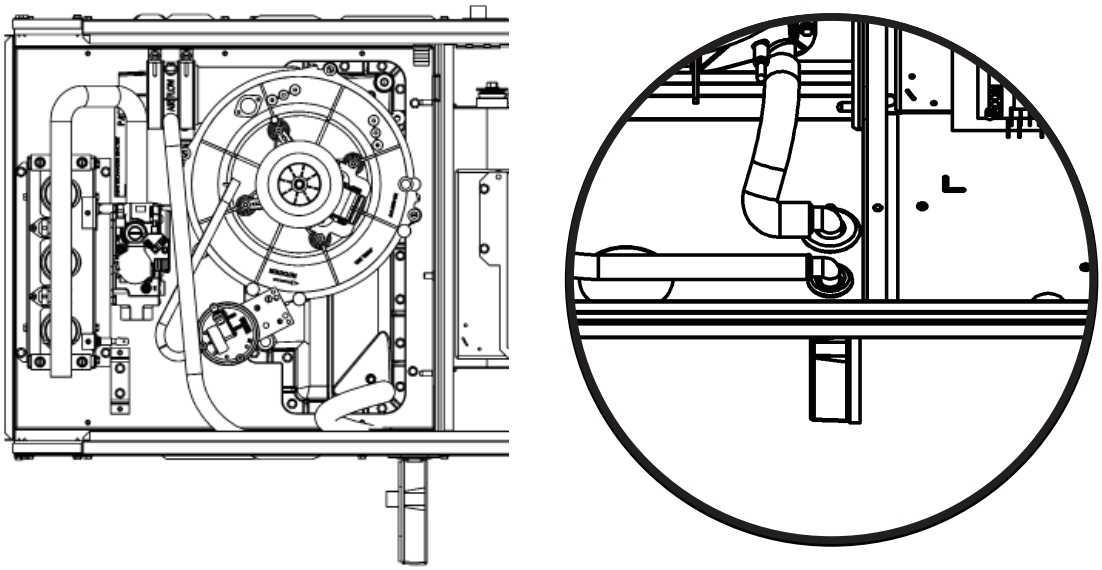

IMPORTANT:

- **PRIME CONDENSATE TRAP WITH WATER AND CUT DRAIN HOSES TO PROPER LENGTH.**
- **CUT PRESSURE SWITCH TUBING TO PROPER LENGTH.**
- **DO NOT SUBMERGE TERMINATION OF DRAIN HOSE.**

FIGURE 18 - HORIZONTAL RIGHT VENT AND DRAINING OPTION

LEFT (PANEL) VENT INSTALLATION

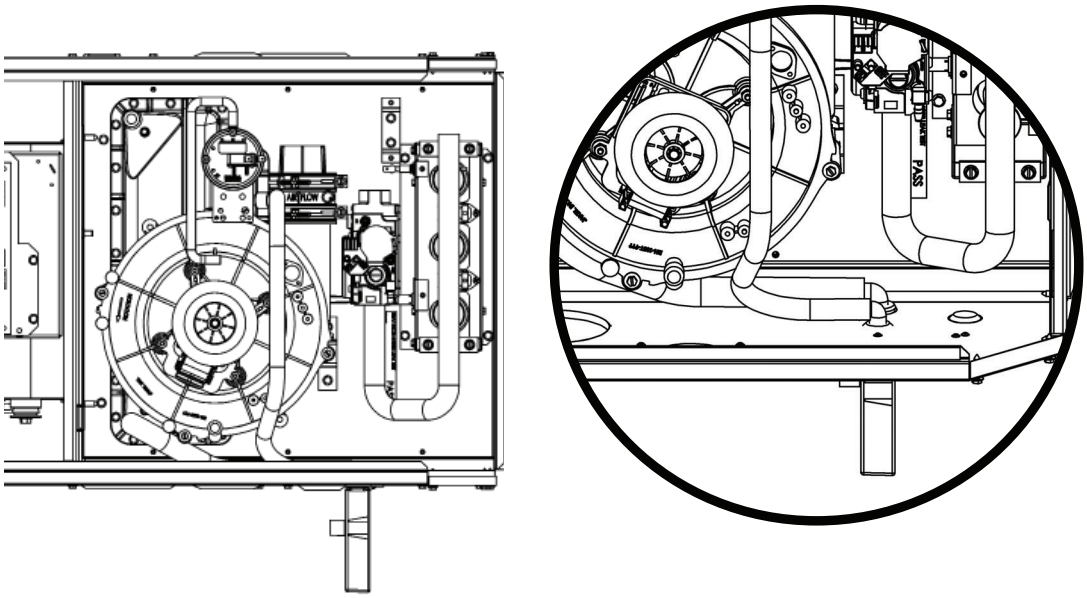

IMPORTANT:

- **PRIME CONDENSATE TRAP WITH WATER AND CUT DRAIN HOSES TO PROPER LENGTH.**
- **CUT PRESSURE SWITCH TUBING TO PROPER LENGTH.**
- **DO NOT SUBMERGE TERMINATION OF DRAIN HOSE.**

FIGURE 18 - HORIZONTAL RIGHT VENT AND DRAINING OPTION CONTINUED

RIGHT VENT INSTALLATION

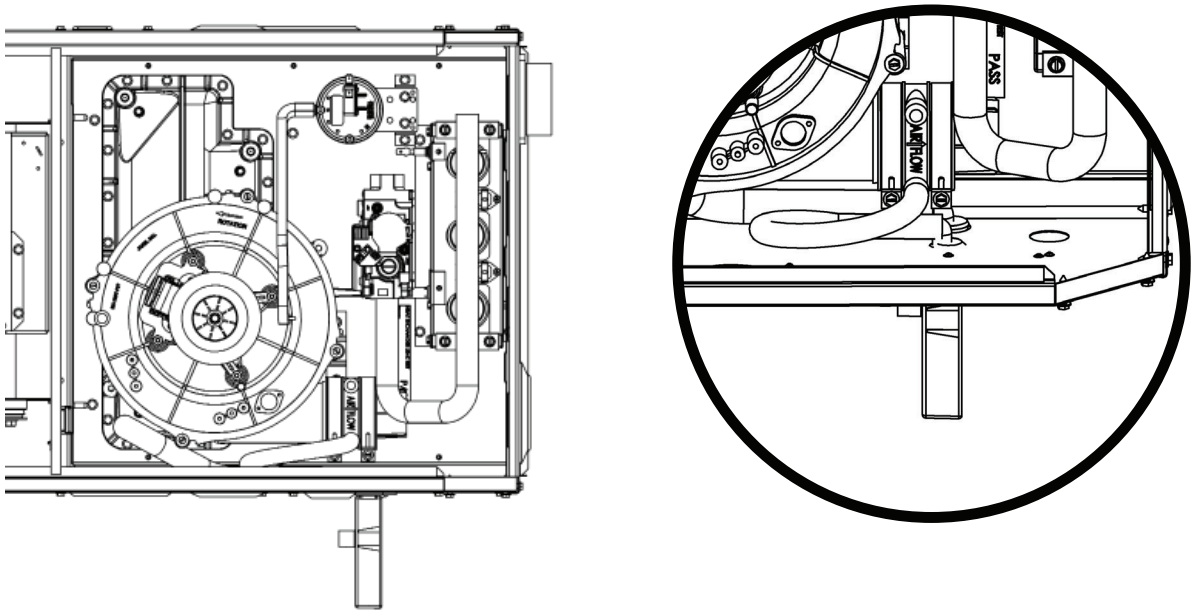

IMPORTANT:

- **PRIME CONDENSATE TRAP WITH WATER AND CUT DRAIN HOSES TO PROPER LENGTH.**
- **CUT PRESSURE SWITCH TUBING TO PROPER LENGTH.**
- **DO NOT SUBMERGE TERMINATION OF DRAIN HOSE.**

FIGURE 19 - DOWNFLOW VENT AND DRAINING OPTION

RIGHT VENT INSTALLATION - LEFT DRAIN (EXTERNAL)

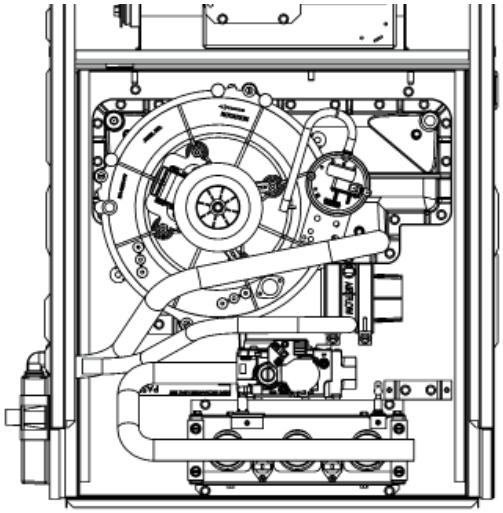

RIGHT VENT INSTALLATION - LEFT DRAIN (INTERNAL)

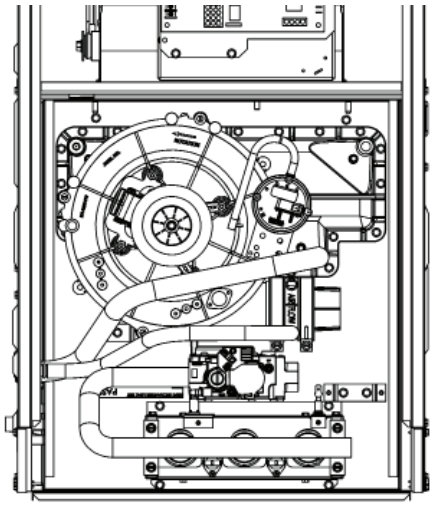

IMPORTANT:

- **PRIME CONDENSATE TRAP WITH WATER AND CUT DRAIN HOSES TO PROPER LENGTH.**
- **CUT PRESSURE SWITCH TUBING TO PROPER LENGTH.**
- **DO NOT SUBMERGE TERMINATION OF DRAIN HOSE.**

FIGURE 19 - DOWNFLOW VENT AND DRAINING OPTION CONTINUED

LEFT VENT INSTALLATION - RIGHT DRAIN (INTERNAL)

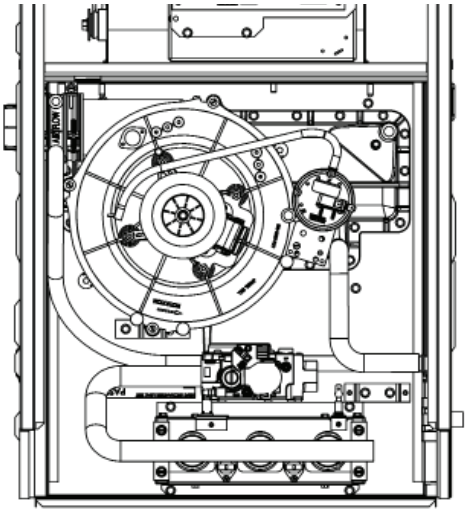

IMPORTANT:

- **PRIME CONDENSATE TRAP WITH WATER AND CUT DRAIN HOSES TO PROPER LENGTH.**
- **CUT PRESSURE SWITCH TUBING TO PROPER LENGTH.**
- **DO NOT SUBMERGE TERMINATION OF DRAIN HOSE.**

BRACKETS USED FOR INSTALLATION

FIGURE 1 - HORIZONTAL ORIENTATION BRACKET

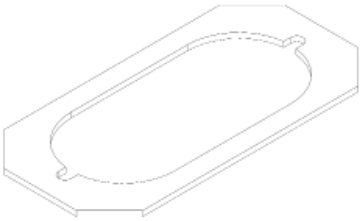

FIGURE 2 - EXTERNAL TRAP BRACKETS

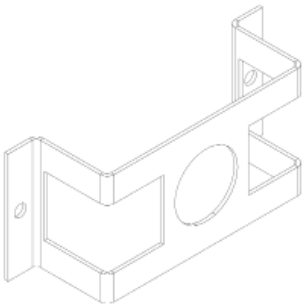

FIGURE 3 - INTERNAL TRAP BRACKET

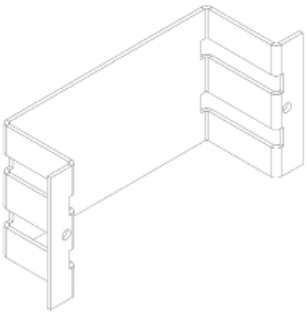

⚠ CAUTION ⚠

THE TWO INLETS TO THE DRAIN TRAP ARE FOR VENT PIPE AND CONDENSATE COLLECTION. THE VENT PIPE INLET IS SMALLER THAN THE CONDENSATE COLLECTION INLET. ENSURE THAT THE DRAIN HOSES ARE PROPERLY CUT TO THE REQUIRED LENGTH CONNECTED AND SECURED.

⚠ CAUTION ⚠

THE TWO INLETS TO THE DRAIN TRAP ARE FOR VENT PIPE AND CONDENSATE COLLECTION. THE VENT PIPE INLET IS SMALLER THAN THE CONDENSATE COLLECTION INLET. ENSURE THAT THE DRAIN HOSES ARE PROPERLY CUT TO THE REQUIRED LENGTH CONNECTED AND SECURED.

11.4 DRAIN HOSE INSTALLATION

1. Ensure one end of the 5/8” tubing is connected to the most direct drain outlet on the front manifold cover, and the other end to the larger elbow on the condensate trap assembly. Cut excess tubing if necessary and hold in place with the supplied plastic hose clamps (in parts bag).
2. Ensure one end of the 1/2” tubing is connected to the drain outlet on the exhauster, and the other end to the smaller elbow on the condensate trap assembly. Cut excess tubing if necessary.

NOTE
All condensate drain tubing must slope towards the condensate trap, ensuring that the drain hoses do not create traps or kinks in the hose prior to the condensate trap assembly.

H16.4.3

11.4.1 DRAIN PIPING

Condensate from the outlet of the drain trap assembly must be conveyed to a floor drain, sump pit, or, if these are unavailable, to a condensate pump. If using a condensate pump, be sure that it is approved for furnace condensate.

⚠ CAUTION ⚠

DO NOT DRAIN THE CONDENSATE OUTDOORS. DO NOT RUN THE CONDENSATE LINE THROUGH AREAS WHERE FREEZING MIGHT OCCUR. FREEZING OF CONDENSATE CAN RESULT IN ERRATIC FURNACE OPERATION AND IN PROPERTY DAMAGE.

A typical configuration would be to connect the side branch of a 1/2” CPVC tee to the drain trap assembly outlet, with the end branches oriented vertically (see the following figures).

A 1” (25mm) piece of 1/2” CPVC pipe connected to the upper end branch will serve as a vent, which will prevent the creation of a vapor lock, and serve as an overflow in the event that the drain line becomes blocked. A similarly sized piece of pipe connected to the lower end branch will permit connection to the condensate outlet with 5/8” ID / 7/8” OD flexible tubing, or the condensate may be piped entirely in CPVC to the floor drain/sump/condensate pump.

NOTE
It is recommended that the condensate drain assembly not be cemented to the condensate trap outlet, if removal of the condensate trap is required in the future. Use a piece of the provided 1/2” drain hose if removal of the condensate trap is anticipated.

IMPORTANT:
IF AN AIR CONDITIONING EVAPORATOR COIL DRAIN IS TO SHARE THE FURNACE DRAIN LINE, IT SHOULD BE CONNECTED WITH A TEE FITTING DOWNSTREAM FROM THE TRAP. DO NOT CONNECT THE EVAPORATOR COIL CONDENSATE DRAIN UPSTREAM OF THE FURNACE DRAIN TRAP ASSEMBLY.

H16.4.1B

FIGURE 21 - HORIZONTAL

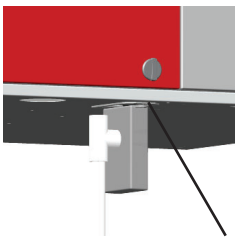

FIGURE 22 - UPFLOW AND DOWNFLOW

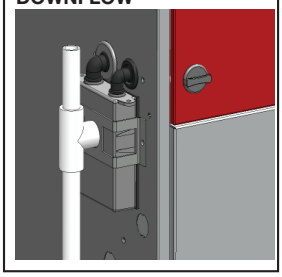

IMPORTANT:

CONNECT 1/2" TEE FITTING (FIELD SUPPLIED) TO THE OUTLET OF THE CONDENSATE TRAP (FIGURES 21 AND 22).

11.4.2 PRIMING CONDENSATE TRAP

IMPORTANT:

THE CONDENSATE DRAIN TRAP ASSEMBLY SHOULD BE FULL OF WATER (PRIMED) BEFORE STARTING THE FURNACE. TO FILL THE CONDENSATE DRAIN TRAP ASSEMBLY, TEMPORARILY REMOVE THE VENT DRAIN HOSE FROM THE EXHAUSTER ASSEMBLY ELBOW/DRAIN FITTING, AND POUR APPROXIMATELY ONE CUP OF WATER DOWN THE HOSE. WATER WILL BEGIN RUNNING OUT THE CONDENSATE DRAIN TRAP OUTLET WHEN IT IS FULL. REFASTEN THE VENT DRAIN HOSE TO THE EXHAUSTER ASSEMBLY ELBOW/DRAIN FITTING.

THE CONDENSATE DRAINAGE CONFIGURATION REQUIRES A VENT. IT TAKES LESS THAN A ONE INCH RISE ANYWHERE ALONG THE HORIZONTAL ROUTE OF THE DRAIN TUBE TO CREATE A VAPOR LOCK, WHICH WILL PREVENT CONDENSATE FROM DRAINING AWAY FREELY, AND RESULT IN ERRATIC FURNACE OPERATION.

H16.4.2

NOTE

The furnace, condensate trap and condensate drain line should be routed within the conditioned space to avoid freezing of condensate and blockage of drain line.
Special precautions MUST be made if installing a condensing furnace in an area which may drop below 32ºF (0ºC). This can cause improper operation or damage to the equipment. If the furnace environment has the potential of freezing, the drain trap and drain line must be protected. In areas where the temperature may be below 32ºF (0ºC) a self-regulating, shielded and waterproof heat tape rated at 3 to 6 watt per foot (10 to 20 watt per meter) at 115 volt, 40ºF (4ºC) may be used to provide freeze protection of the remaining condensate drain line. RV antifreeze can be used to protect the drain trap if unit is going to be off for extended periods of cold weather. Wrap the drain trap and drain line with the heat tape and secure with appropriate plastic ties. Follow the heat tape manufacturer's recommendations. Prime the trap before furnace operation. The use of accessory drain trap heaters, electric heat tape and/or RV antifreeze is recommended for these installations.

Locate the furnace so condensate flows downwards to the drain. Do not locate the furnace or its condensate drainage system in any area subject to below freezing temperatures without proper freeze protection.
If the drain line is routed through an area which may see temperatures near or below freezing, precautions must be taken to prevent condensate from freezing within the drain line.

11.5 ALTERNATE CONDENSATE DRAIN PIPING INSTALLATION USING PVC OR CPVC

1. Install the condensate trap according to instructions included in this manual. 1/2” and 5/8” rubber hoses shown are pre-installed inside the furnace from factory.

FIGURE 23

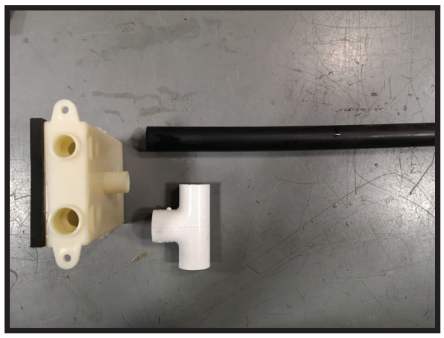

FIGURE 24

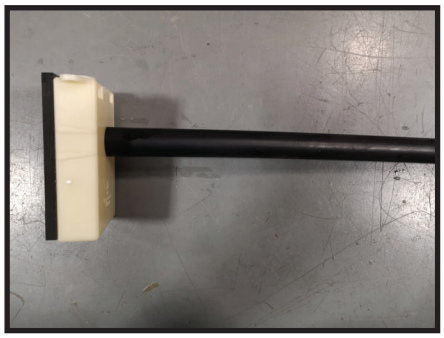

2. If installing with 1/2” PVC, use the 1/2” hose. If installing with 3/4” CPVC, use the 5/8” hose. Slide the appropriate hose over the condensate trap outlet and cut it flush with the end of the outlet. The remaining rubber should be flush with the end of the outlet on the condensate trap. The remaining hose is sufficient length to accommodate all furnace orientations.

FIGURE 25

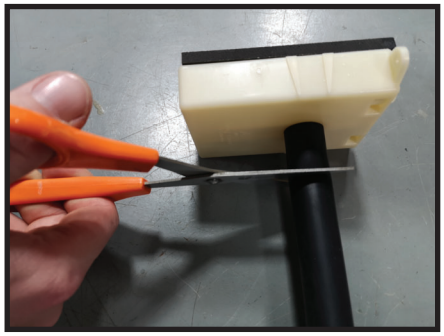

FIGURE 26

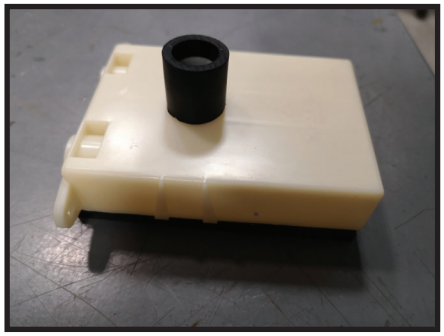

3. A 1/2” PVC coupling or bushing will fit snug over the 1/2” rubber hose. A 3/4” CPVC coupling or bushing will fit snug over the 5/8” rubber hose. This method ensures a water tight seal and also allows the condensate trap to be easily removed for service.

FIGURE 27

4. If extra security is desired, it is recommended to secure a strip of strapping around the drain. Utilize the existing condensate trap screws to secure the strapping.

H16.5.3B

11.6 CONDENSATE NEUTRALIZERS

Some local codes may require the use of a condensate neutralizer. If the furnace condensate is to be routed to a septic system, it may be advisable to use a condensate neutralizer.

When condensate neutralizers are used, it is advisable to install it with an overflow bypass tube.

H16.6

12.0 GAS SUPPLY AND PIPING

12.1 GAS SUPPLY

⚠ WARNING ⚠

THIS FURNACE IS FACTORY EQUIPPED TO BURN NATURAL GAS ONLY.

CONVERSION TO LP GAS REQUIRES A NATURAL GAS TO LP CONVERSION KIT (W370-0018).

FAILURE TO USE THE PROPER CONVERSION KIT CAN CAUSE FIRE, EXPLOSION, CARBON MONOXIDE POISONING, PROPERTY DAMAGE, PERSONAL INJURY OR LOSS OF LIFE.

H3.18

IMPORTANT:

- CONVERSION OF THIS FURNACE REQUIRES SPECIALIZED EQUIPMENT. CONVERSION MUST BE COMPLETED BY A TRAINED AND QUALIFIED INSTALLER, SERVICE AGENCY OR GAS SUPPLIER.
- CONNECT THIS FURNACE ONLY TO GAS SUPPLIED BY A COMMERCIAL UTILITY OR SUPPLIER. PRIVATE GAS WELLS DO NOT GENERALLY PROVIDE GAS WITH CONSISTENT, UNIFORM AND PREDICTABLE HEATING VALUES AND DENSITIES. MANY NON-COMMERCIAL WELLS CONTAIN IMPURITIES SUCH AS SULPHUR, WHICH MAY DAMAGE THE FURNACE. THIS FURNACE CANNOT OPERATE PROPERLY OR SAFELY USING FUELS OUTSIDE NORMAL COMMERCIAL STANDARDS.

H17.1

12.2 GAS PIPING

In Canada, the gas piping should be installed in accordance with CAN/CSA-B149.1 and 2, and in accordance with any local codes.

In the United States, the gas piping should be installed in accordance with (NFGC) NFPA 54 / ANSI Z223.1 and any local codes.

If local codes allow the use of a flexible gas appliance connector, always use a new listed connector. Do not use a connector, which has previously serviced another gas appliance.

IMPORTANT:
To maintain a good seal in the burner area, the gas piping through the side panel into the furnace must be 1/2” Schedule 40 black iron pipe. The pipe passes through a special rubber grommet that is custom manufactured to seal tightly around the gas pipe. (Figure 23)

The gas piping may enter the furnace from either side. Once the routing of the gas pipe is determined, select and remove the plastic cap if necessary and install on other panel, and install the grommet within the hole.

FIGURE 28 - FURNACE GAS PIPE CONNECTIONS (NOTE RUBBER GROMMET)

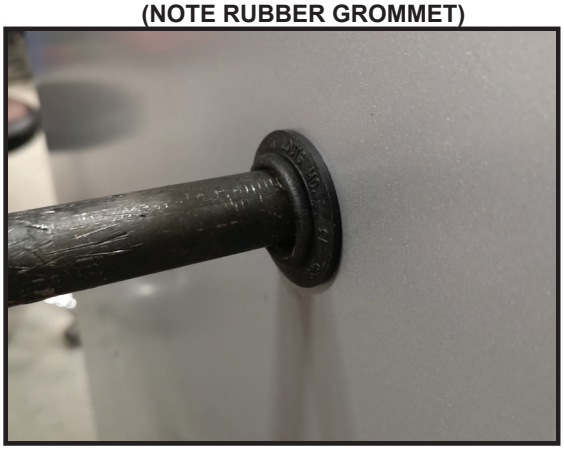

NOTE
We recommend a union between the gas valve and the side panel to allow easy removal of the burner for service purposes.

IMPORTANT:
ENSURE THAT THE GAS VALVE IS NOT SUBJECTED TO HIGH PRESSURES.

IMPORTANT:
ALWAYS USE A BACKUP WRENCH TO PREVENT TWISTING OF THE GAS VALVE. ANY STRAINS ON THE GAS VALVE CAN AFFECT POSITIONING OF THE ORIFICES RELATIVE TO THE BURNERS. THIS COULD RESULT IN FAULTY BURNER OPERATION.

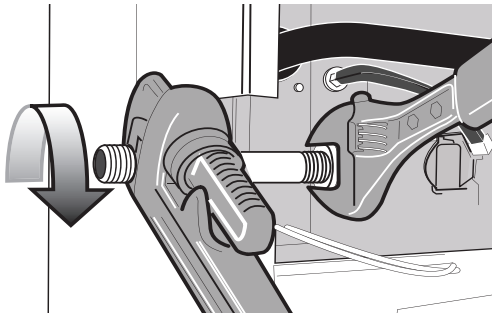

Install a manual gas shut-off valve and dirt pocket as close to the furnace as possible. Some local codes call for the manual gas shut-off valve to be located between 4 feet (1.2m) to 5 feet (1.5m) above floor level to prevent tampering by small children. Ensure that the valve is readily accessible.

H17.2B

⚠ WARNING ⚠

DISCONNECT THE MANUAL SHUT-OFF VALVE AND GAS VALVE DURING ANY PRESSURE TESTING THAT EXCEEDS 1/2 P.S.I.G. (3.45 KPA).

H3.19

12.3 GAS INLET PRESSURE

The natural gas inlet supply pressure should be 5” to 7” w.c. (7” w.c. recommended). The LP gas inlet supply pressure should be 11” to 13” w.c. (12” w.c. recommended). These pressures must be maintained while all other gas fired appliances are operating at maximum conditions.

IMPORTANT:
DO NOT EXCEED 13” W.C. INLET PRESSURE WITH EITHER FUEL.

The gas valve has an adjustable internal regulator for controlling burner manifold pressure. Burner manifold pressure is listed on the furnace rating plate.

H17.3.1

12.4 LEAK TESTING

All new gas piping installations should be pressure tested as specified by CAN/CSA-B149.1 & 2, or NFPA 54 ANSI Z223.1 or ANSI/NFPA 58, *“Standard for the Storage and Handling of Liquefied Petroleum Gases.”*

Gas piping that has not been pressure tested, from the manual shut-off valve to the furnace gas valve for example, should be leak tested using an electronic combustible gas detector, a commercially prepared leak detector, or other locally approved method.

H17.4

12.5 PURGING GAS LINES

⚠ WARNING ⚠

NEVER USE A MATCH, TAPER, CIGARETTE LIGHTER, FLAME OR ANY OTHER IGNITION SOURCE TO CHECK FOR LEAKS IN A GAS LINE.

FAILURE TO ADHERE TO THIS WARNING CAN CAUSE A FIRE OR EXPLOSION RESULTING IN PROPERTY DAMAGE, PERSONAL INJURY, OR LOSS OF LIFE.

H3.20

13.0 CONVERSIONS

13.1 HIGH ALTITUDE CONVERSION

In Canada, this furnace does not need to be converted for high altitude (2000-4500ft), when the fuel source is natural gas. It has been certified to operate at high altitude as manufactured. Between 2000ft and 4500ft when the fuel source is LP, a 10% reduction of input capacity is necessary.

In the United States, this furnace does not need to be converted for high altitude from (2000-5400ft), when the fuel source is natural gas. It has been certified to operate at high altitude as manufactured up to 5400ft only. Beyond 5400ft the modifications are based on a 4% reduction of input capacity for every 1000ft above sea level. If the fuel source is liquid propane, refer to High Altitude Specifications table for appropriate derate above 2000ft based on a 4% reduction of input capacity for every 1000ft above sea level. Consult with local fuel suppliers or authorities to determine local regulations or customs.

H18.1.5

Input K/Btu/hr	ALTITUDE	ORIFICE SIZE (DMS)	
		NATURAL	LP GAS
40/60/80 100	0-2000 (0-610 m)	45	55
	2000-3000 (610-914 m)		56
	3000-4000 (914-1219 m)		57
	4000-5000 (1219-1524 m)		58
	5000-5400 (1524-1646 m)		59
	5400-6000 (1646-1829 m)	51	60
	6000-7000 (1829-2134 m)	52	61
	7000-8000 (2134-2438 m)	53	62
	8000-9000 (2438-2743 m)	54	63
	9000-10000 (2743-3048 m)	55	65

Input K/Btu/hr	ALTITUDE	ORIFICE SIZE (DMS)	
		NATURAL	LP GAS
30	0-2000 (0-610 m)	50	57
	2000-3000 (610-914 m)		58
	3000-4000 (914-1219 m)		59
	4000-5000 (1219-1524 m)		60
	5000-5400 (1524-1646 m)		61
	5400-6000 (1646-1829 m)	56	62
	6000-7000 (1829-2134 m)	57	63
	7000-8000 (2134-2438 m)	58	64
	8000-9000 (2438-2743 m)	59	65
	9000-10000 (2743-3048 m)	60	67

Gas input ratings are certified for elevations to 5400 ft. (1646 m) on natural gas. For elevations above 5400 ft. (1646 m) on natural gas, or LP fuel source above 2000 ft. (610 m), follow orifice derate chart above.

H12.8.1A

13.2 NATURAL TO LP GAS

This series furnace is manufactured as a natural gas appliance that may be converted to LP gas through use of the **Conversion Kit part number W370-0018**. This kit contains the conversion kit instructions, orifices needed for all models, the regulator spring for the gas valve, and a label to affix adjacent to the appliance rating plate to alert subsequent service technicians of the conversion. **The parts removed for this conversion must remain with the furnace for any future conversion back to natural gas.**

When converting for LP operation the installation of a low pressure cut off switch is required, which is included in the LP Conversion Kit (Part No. W370-0018).

H18.2B

13.3 CONVERSION STEPS

Refer to Conversion NG to LP Kit (W370-0018) for complete instruction.

H18.3

13.4 CHECKING THE INLET GAS PRESSURE

WHITE-RODGERS 36J24-214 / 36J24-218P1 SINGLE STAGE GAS VALVE

1. Turn off the gas and electrical supply to the furnace.
2. Back off inlet pressure test screw (inlet pressure boss, see FIGURE 28 & 29) counterclockwise out one turn maximum, with a 3/32” Allen wrench. Attach a hose and calibrated U-tube or digital manometer to the inlet pressure boss. Hose should overlap boss 3/8”. The manometer must have a scale range of at least 0” to 15” of water column.
3. Turn ON the gas and electrical supply and operate the furnace and all other gas consuming appliances on the same gas supply line. Using a leak detection solution, check for leaks around the gas valve/manifold connection and the burner orifices. Repair any leaks before continuing.
4. Measure furnace gas inlet pressure with burners firing. Inlet pressure must be within the range specified on the furnace rating plate. 5-7” w.c. (Natural Gas) or 11-13” w.c. (LP).

5. Turn off gas and electrical supply to furnace, remove the manometer hose from the inlet pressure tap boss, and tighten the inlet pressure tap screw using the 3/32” Allen wrench. (Clockwise, 7 in-lb minimum).
6. Turn on the gas supply and electrical power to the furnace.
7. Using a leak detection solution, check for leaks at pressure boss screw. Bubbles forming indicate a leak. SHUT OFF GAS AND FIX ALL LEAKS IMMEDIATELY!
8. Turn gas back on and test inlet pressure boss with leak detector.
9. If the inlet pressure differs from the rating plate, check the gas piping size and/or consult with local gas utility. If working on a natural gas system, contact the gas utility. They may insist on any service regulator adjustments being made by their own staff.

If problems were encountered with obtaining enough pressure, first examine the gas piping system to ensure that it is correctly sized. Pipe sizing is specified in CAN/CSA-B-149.1 & 2, and in NFPA 54 / ANSI Z223.1. Be sure to check for restrictions, partially closed valves, etc.

In some circumstances, high inlet pressure can be remedied with the use of an in line appliance regulator. If an in line appliance regulator is used, ensure that it has the capacity to adequately handle the gas volume required by the furnace and any other appliances receiving gas from the header serving the furnace.

FIGURE 29 - WHITE RODGERS 36J24-214 GAS VALVE

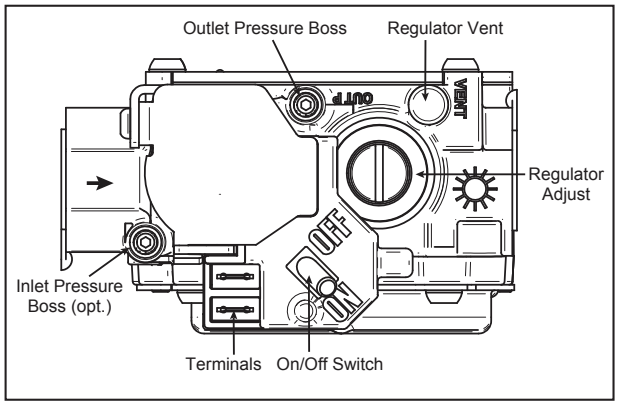

FIGURE 30 - VALVE PRESSURE CHECK KIT

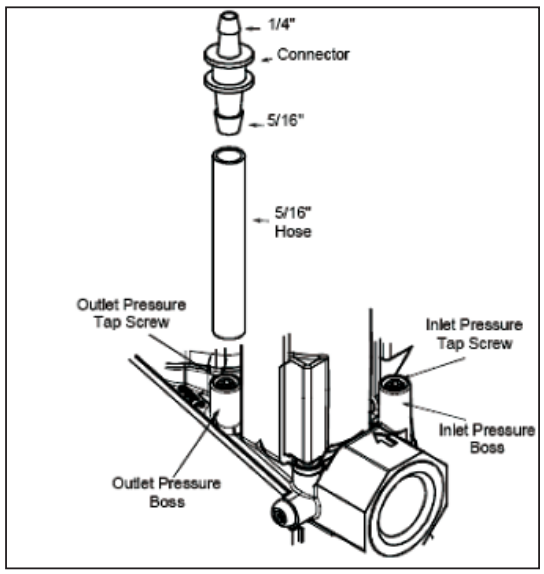

13.5 SETTING THE MANIFOLD GAS PRESSURE

When the installation is completed to the *“Start-up & Setup”* stage, test the gas manifold pressure by following these steps:

WHITE-RODGERS 36J24-214 SINGLE STAGE GAS VALVE

1. Turn off the gas and electrical supply before proceeding.
2. Back outlet pressure test screw (outlet pressure boss, see fig. 28 & 29) counterclockwise out one more turn maximum, with a 3/32” Allen wrench. Attach a hose and calibrated U-tube or digital manometer to the outlet pressure boss. Hose should overlap boss 3/8”. The manometer must have a scale range of at least 0” to 15” of water column.
3. Turn on the gas supply and electrical power to the furnace and energize main solenoid by connecting R to W on the integrated control board.
4. Remove regulator adjust cover screw from the outlet pressure regulator adjust tower (fig.28) and turn the plastic regulator adjustment screw clockwise to increase manifold pressure or counterclockwise to reduce manifold pressure. Manifold pressure should be set to 3.5” w.c for natural gas, 10.0” w.c. for LP gas. Always adjust regulator according to original equipment manufacturer’s specifications listed on the appliance rating plate.

   When the correct pressure has been established, securely replace the regulator cover screw.
5. Turn off the gas and electrical supply to the furnace.

6. Remove the manometer hose from the outlet pressure tap boss, and tighten the outlet pressure tap screw using the 3/32” Allen wrench. (Clockwise, 7 in-lb minimum).

⚠ WARNING ⚠

ALL REGULATOR ADJUSTMENTS MUST BE DONE BY A TRAINED, QUALIFIED TECHNICIAN. IMPROPER MODIFICATIONS OR ADJUSTMENTS CAN RESULT IN FIRE OR EXPLOSION CAUSING PROPERTY DAMAGE, SEVERE PERSONAL INJURY OR LOSS OF LIFE.

H3.21

7. Turn on the gas supply and electrical power to the furnace.
8. Turn on system power and energize valve.
9. Using a leak detection solution, check for leaks at pressure boss screw. Bubbles forming indicate a leak. SHUT OFF GAS AND FIX ALL LEAKS IMMEDIATELY!

H18.5.3

13.6 CHECKING FURNACE INPUT

The natural gas supply pressure should be a maximum of 10.5” w.c. and minimum of 5” w.c (recommended 7” w.c.). The LP gas inlet supply pressure should be 11” to 13” w.c.. The input rating of the furnace is based on 1000 Btu/ft.³ gas with a specific gravity of 0.6.

Since heating values for the gas vary geographically, the actual furnace input and output will vary accordingly. For example, natural gas with a 900 Btu/ft.³ heating value will reduce the input to 90% of the rated input. Natural gas with a 1100 Btu/ft.³ heating value will increase the input to approximately 110% of the rated input. This is not usually a problem; however, adjustments to compensate for this can be made by minor adjustments to the burner manifold pressure or by changing the burner orifice size. Contact the fuel supplier for specific heating content values.

Any adjustments to the burner manifold pressure should be carried out with the use of a manometer or calibrated Magnehelic® gauge. Do not adjust the gas valve pressure regulator more than ±0.3” w.c. from that specified on the rating label. Refer to Figure 30.

IMPORTANT:
NEVER ADJUST THE INPUT OF THE FURNACE TO EXCEED THE INPUT SHOWN ON THE RATING PLATE.

$$\text{Input} = \frac{\text{Heating Value of Gas} \times 3600}{\text{Time in Sec. for 1 cu. ft.}}$$

where:

- input is expressed in Btu/hr
- heating value of the gas is expressed in Btu/ft³
- and time is the number of seconds required for the test dial to indicate 1 cubic foot.

If using a gas meter with SI (metric) units:

- *1 cubic foot = 0.0283 cubic meters*
- *1 cubic meter = 35.315 cubic feet*
- *0.01 cubic meter = 0.3531 cubic feet*
- *0.5 cubic meter = 1.766 cubic feet*

H18.6.4A

FIGURE 31 - MANOMETER MEASURING GAS MANIFOLD PRESSURE

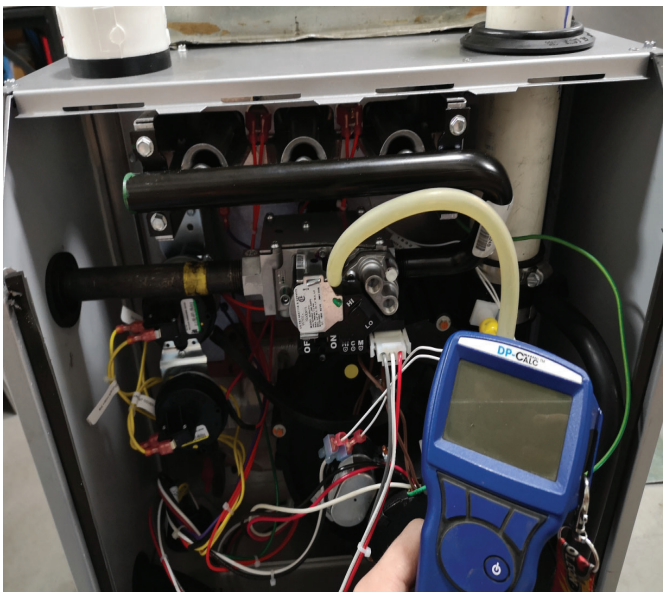

14.0 ELECTRICAL SPECIFICATIONS

14.1 ELECTRICAL WIRING AND CONNECTIONS

Before proceeding with the electrical connections, ensure that the available electrical supply is compatible with the voltage, frequency and phase listed on the appliance rating plate.

All furnaces are rated 120 VAC, 60 Hz, 1 Ø. The amperage rating is 12 amps or less.

Each furnace requires a dedicated 15 amp over-current device, either a 15 amp circuit breaker or a 15 amp Type D time delay fuse. It is permissible to connect furnace accessories such as humidifier transformers, condensate pumps and electronic air cleaners. If adding accessory equipment to the furnace circuit, ensure that the combined amperages listed on the appliance rating plates does not exceed the rating of the over-current device.

⚠ WARNING ⚠

SHUT OFF ELECTRICAL POWER AT THE FUSE BOX OR SERVICE PANEL BEFORE MAKING ANY ELECTRICAL CONNECTIONS. FAILURE TO DO SO CAN CAUSE ELECTRICAL SHOCK RESULTING IN PERSONAL INJURY OR LOSS OF LIFE.

- **THE FURNACE CABINET MUST HAVE AN UNINTERRUPTED GROUND.**
- **A GROUND WIRE IS PROVIDED IN THE ELECTRICAL JUNCTION BOX.**
- **DO NOT USE GAS PIPING AS A GROUND.**

FAILING TO GROUND THE FURNACE PROPERLY CAN RESULT IN ELECTRIC SHOCK RESULTING IN PERSONAL INJURY OR DEATH.

H3.22

In Canada, all electrical work must be in accordance with the latest edition of CSA-C22.1, Canadian Electrical Code Part 1, and any applicable local code.

In the United States, all electrical work must be in accordance with the latest edition of the National Electrical Code, ANSI / NFPA 70.

Although a suitably located circuit may serve as a service switch, a separate service switch is recommended. A separate service switch is necessary if the circuit breaker is in a location where accessing it would require getting close to the furnace, or if the furnace is located between the main electrical panel and the entry to the furnace room. **The furnace switch (service switch) should be clearly labeled, and installed in a location where it is not likely to be mistaken as being a light switch or similar control.**

FIGURE 32 - ELECTRICAL CONNECTIONS / MOLEX CONNECTOR

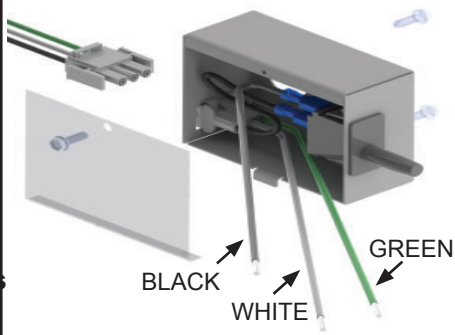

H19.1A

FIGURE 32A - INTEGRATED FURNACE IGNITION CONTROL - X13

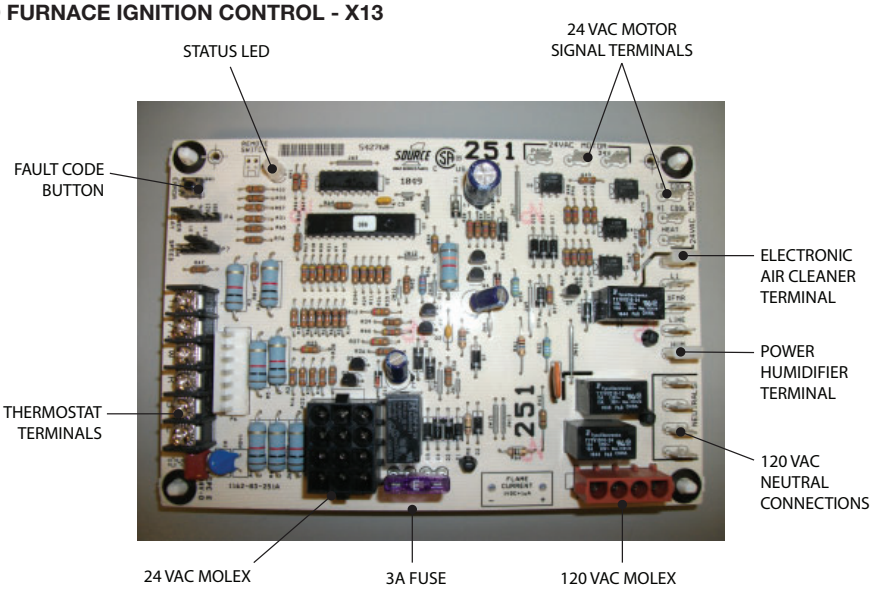

14.2 FURNACE CONNECTION

The furnace is shipped fully wired except for the connections to the house wiring. The furnace power connections are made in a junction box inside the blower compartment. The junction box contains a BLACK wire to be connected with L1 (hot), a WHITE wire to be connected with L2 (Neutral), and a GREEN wire to be connected to the ground.

NOTE
Use good quality wire nuts such as Marrette® connectors, Ideal® wire nuts, etc.

IMPORTANT:
USE COPPER CONDUCTORS ONLY.

If the junction box must be moved from it's original location to the other side of the unit.

1. Remove the appropriate plastic cap from the desired left or right side panel, and place it on the panel not being serviced.
2. Fasten the junction box to the selected panel.
3. Secure power line connection into junction box, following above reference.
4. Use only ground screws for junction enclosure.

H19.2

⚠ WARNING ⚠

THIS FURNACE IS EQUIPPED WITH A BLOWER DOOR SAFETY SWITCH. DO NOT DISABLE THIS SWITCH. FAILURE TO FOLLOW THIS WARNING CAN RESULT IN ELECTRICAL SHOCK, PERSONAL INJURY, OR LOSS OF LIFE.

H3.23

15.0 LOW VOLTAGE WIRING

The thermostat and control wiring should be a minimum of 18 AWG copper. Excessive lengths of wire may result in enough voltage drop to impair the proper functioning of the furnace. For thermostat wires in excess of 25 feet (7.6m), use 16 AWG; 50 feet (15.2m), use 14 AWG.

H53.1

15.1 THERMOSTAT LOCATION

The thermostat should be located approximately 5 feet (1524mm) above the floor, on an inside wall where there is good natural air circulation, and where the thermostat will be exposed to average room temperatures. Avoid locations where the thermostat will be exposed to cold drafts, heat from nearby lamps or appliances, exposure to sunlight, heat from inside wall stacks, etc.

H53.2

FIGURE 33 - THERMOSTAT CONNECTION DIAGRAM

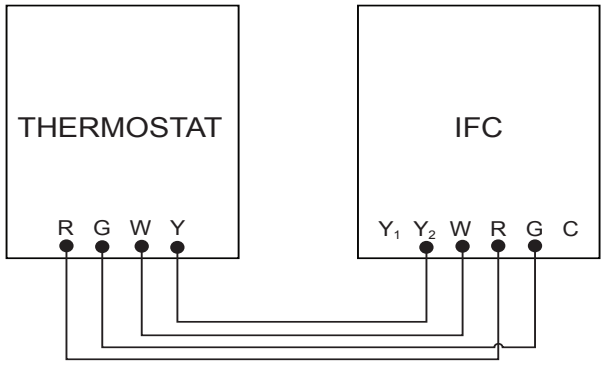

H24.15

15.2 FURNACE PAIRED WITH HEAT PUMP

With installation applications that combine a furnace and a heat pump in conjunction with a thermostat which features dual fuel use, the JW39 jumper on the furnace control board must be cut. If the jumper is left intact, terminal “O” will remain energized effectively eliminating the cooling mode of the heat pump.

Cut JW39 for heat pump

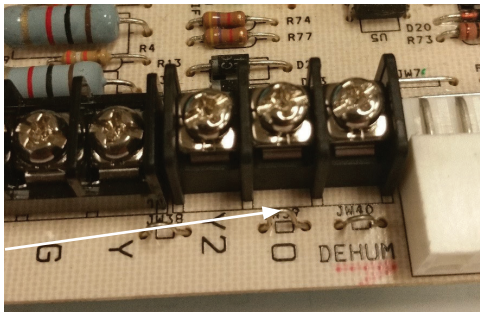

H53.5

16.0 OPTIONAL ACCESSORIES (FIELD SUPPLIED/ INSTALLED)

16.1 ELECTRONIC AIR CLEANER

The integrated furnace control has provisions to supply power and control an electronic air cleaner rated at 120VAC, 1.0 amp max. 120 volt power will be available at these terminals whenever the circulating fan is operating in the heating or cooling fan modes.

H20.1.1

16.2 POWER HUMIDIFIER

The integrated furnace control has provisions to supply power and control a line voltage humidifier or the primary of a 120 / 24 volt humidifier step down transformer, rated at 120VAC, 1.0 amp max.

NOTE

All HUM and EAC terminals are 120V. Do not directly connect 24V equipment to these terminals.

H20.2

17.0 STARTUP PROCEDURES

This furnace is equipped with a HSI (Hot Surface Ignition) device. Each time that the room thermostat calls for heat, the HSI lights the main burners directly. See the lighting instructions on the furnace.

When the gas supply is initially connected to the furnace, the gas piping may be full of air. Follow the instructions contained in the natural gas and propane installation codes to properly purge the gas supply line. Test the affected joints to ensure there are no leaks. Allow five minutes for any gas to dissipate before continuing with the start-up procedure. Be sure proper ventilation is available to dilute and carry away any vented gas.

During initial start-up, it is not unusual for odor to come out of any room register. To ensure proper ventilation, it is recommended to open windows and doors, before initial firing.

The furnace has a negative pressure switch that is a safety during a call for heat. The induced draft blower must pull a negative pressure on the heat exchanger to close the negative pressure switch. The induce draft blower must maintain at least the negative pressure switch set point for the furnace to operate. If the induced draft blower fails to close or maintain the closing of the negative pressure switch, a “no heat call” would result.

NOTE

It is required/mandatory that the drain trap assembly be primed before the initial startup. Refer to the instructions on how to prime the condensate trap on the drain piping section in this manual. A dry trap will allow flue gases to flow through the recovery coil drain, which will prevent the condensate from draining from the recovery coil. If enough condensate accumulates in the recovery coil, the recovery coil pressure switch will sense this condition and break its electrical contacts, and extinguish combustion. If this takes place, the induced blower will stop after a brief post-purge cycle, the condensate will drain out and fill the trap. If the thermostat is still calling for heat, the ignition sequence will start again after a 5 minute wait.

H21.0B

17.1 TO START THE FURNACE

1. Shut off the electrical power to the furnace and set the room thermostat to its lowest setting.
2. Remove the burner compartment access door.

IMPORTANT:
ENSURE THAT THE MANUAL GAS VALVE SWITCH HAS BEEN IN THE "OFF" POSITION FOR AT LEAST 5 MINUTES. DO NOT ATTEMPT TO MANUALLY LIGHT THE MAIN BURNERS.

3. Turn the gas valve switch to the "ON" position.
4. Replace the burner compartment access door.
5. Turn on furnace appliance shut off valve.
6. Restore electrical power to the furnace.
7. Set the room thermostat to a point above room temperature to light the furnace.
8. After the burners are lit, set the room thermostat to the desired temperature.

H21.1

17.2 TO SHUT DOWN THE FURNACE

1. Set the room thermostat to below set point.
2. Remove the burner compartment access door.
3. Turn the gas valve switch to the "OFF" position.
4. The furnace appliance shut-off valve may be closed if desired.
5. Power to the furnace must remain on for the air conditioner to work.

H21.2

⚠ WARNING ⚠

SHOULD OVERHEATING OCCUR OR THE GAS BURNERS FAIL TO SHUT OFF, CLOSE THE MANUAL GAS VALVE FOR THE FURNACE BEFORE SHUTTING OFF THE ELECTRICAL POWER TO THE FURNACE. FAILURE TO DO SO CAN CAUSE AN EXPLOSION OR FIRE RESULTING IN PROPERTY DAMAGE, PERSONAL INJURY OR LOSS OF LIFE.

BEFORE RESTARTING THE FURNACE, CHECK ALL PLASTIC VENTS AND WIRES FOR DAMAGE.

H3.24

17.3 SEQUENCE OF OPERATION

1. Room temperature drops causing the room thermostat call for heat by connecting "W" to "R". The control verifies the limit switch is closed and the pressure switch(s) are open. The control energizes the exhauster motor and waits for the pressure switch(s) to close. The exhauster remains energized for a 15 second pre-purge period. If the pressure switch(s) do not close within 60 seconds, the control will flash "2" on the Red Status LED, and de-energize the exhauster for 60 minutes.
2. When the 15 second pre-purge time has elapsed, the control energizes the HSI output for a 15 second warm-up period (15 seconds on retries). The control energizes the gas valve. 4 seconds after the gas is energized, the control de-energizes the HSI output and leaves the gas energized another 1 second for flame proving. If flame is present at the end of trial for ignition time, the control leaves the gas valve energized, exhauster on, and begins heat blower on delay.
3. Blower on delay time begins when the gas valve is energized.
4. Blower off delay is handled by the control board. When the thermostat "W" call ends, the control de-energizes the gas valve, and starts the blower off delay period.

IN THE EVENT OF FLAME FAILURE:

If flame is lost, the control de-energizes the gas valve within 2 seconds, continues running the exhauster motor, and begins timing the inter-purge delay. The indoor blower motor will be energized and/or remain energized on heat speed for the delay off time. When the inter-purge delay is over, the control will re-cycle up to 5 flame losses (4 re-cycles) within a single call for heat before going into lockout. The control flashes "8" on the Red LED if lockout is due to too many flame dropouts (1 hour lockout).

H21.3.1B

18.0 AIR FLOW

For proper furnace operation, air flow over the heat exchanger is of utmost importance. Insufficient airflow accelerates metal fatigue and possible failure in the heat exchanger, as well as decreased efficiency. Excessive airflow promotes accelerated corrosion of the heat exchanger.

IMPORTANT:
DO NOT BYPASS THIS STEP OF THE START UP PROCEDURES.

H22.0

TABLE 1 - RANGE OF TEMPERATURE RISE

	INPUT	OUTPUT	DELTA T (°F)
WPX030S2AA-N	30,000	28,500	35-65
WPX040S2AA-N	40,000	38,000	35-65
WPX060S3AA-N	60,000	57,000	40-70
WPX080S3AA-N	80,000	76,000	40-70
WPX100S5BA-N	100,000	95,000	40-70

18.1 TEMPERATURE RISE CHECK

When the duct system is complete and the air filter or filters are in place, determine if the airflow is correct for both low and high fire input rates.

1. Insert a duct thermometer in the supply air duct. The thermometer should be placed as close as practical to the furnace, but out of the “line of sight” of the heat exchanger (this prevents false readings owing to radiant heat). Ensure that the thermometer location is within the duct air stream. Avoid locations such as the inside radius of an elbow, etc.
2. Insert a duct thermometer in the return air duct as close to the furnace as practical. Ensure that the thermometer location will be unaffected by humidifier bypass ducts, etc. Choose a location well within the main air stream.
3. Operate the furnace long enough to obtain steady state conditions
4. When the two thermometers have stabilized, usually within 5-8 minutes, compare the two readings. Subtract the return air temperature from the supply air temperature. The difference is the temperature rise, also called ΔT.
5. Compare the measured ΔT to the temperature rise range shown on the rating plate.

When adjusting the temperature rise, see Section 18.3. The ideal temperature is approximately mid-range on the rating plate.

Heat speeds are not meant to be adjusted.

H22.1.7

If the measured ΔT is above the approved temperature range, there is too little air flow. It must be increased by removing restrictions in the ductwork, adding supply or return ductwork, or by selecting a higher motor speed.

If the measured ΔT is too low, there is too much air flow.

18.2 CALCULATING AIR FLOW

There are circumstances where it may be desirable to know the air flow delivery through the duct system, such as when estimating the amount of air flow available for air conditioning. This can be done by direct measurement with electronic or sloped manometers and velometers, or use the formula in the next column.
counting number of flashes

$$\text{CFM} = \frac{\text{Output}}{1.085 \times \Delta T}$$

where:
- CFM is airflow in cubic feet per minute;
- ΔT is the temperature rise; and
- Output is the furnace output capacity from the rating plate.

IMPORTANT: Make sure to install all the doors/access panels on the equipment prior to measuring Delta T.

H22.2.1A

18.3 BLOWER AIRFLOW

⚠ WARNING ⚠

DISCONNECT THE ELECTRICAL SUPPLY TO THE FURNACE BEFORE ATTEMPTING TO CHANGE THE BLOWER SPEED. FAILURE TO DO SO COULD RESULT IN ELECTRICAL SHOCK RESULTING IN PERSONAL INJURY OR LOSS OF LIFE.

H3.77

TABLE 7A

Model: WPX030S2AA-N/C					
ESP (in. WC)	Heat (1)	Cont. Fan (2)	1.5T Cool	2.0T Cool (4)	2.5T Cool (5)
0.5	340	245	458	757	880
0.1	535	529	631	869	983
Model: WPX040S2AA-N					
ESP (in. WC)	Heat (1)	Cont. Fan (2)	1.5T Cool (3)	2.0T Cool (4)	2.5T Cool (5)
0.5	569	427	453	739	875
0.1	723	601	629	865	976
Model: WPX060S3AA-N					
ESP (in. WC)	Heat (1)	Cont. Fan (2)	2.0T Cool (3)	2.5T Cool (4)	3.0T Cool (5)
0.5	798	574	846	1047	1230
0.12	960	771	1017	1192	1353
Model: WPX080S3AA-N					
ESP (in. WC)	Heat (1)	Cont. Fan (2)	2.0T Cool (3)	2.5T Cool (4)	3.0T Cool (5)
0.5	1192	825	807	1020	1087
0.2	1320	1107	999	1175	1183
Model: WPX100S5BA-N					
ESP (in. WC)	Heat (1)	Cont. Fan (2)	3.0T Cool (3)	4.0T Cool (4)	5.0T Cool (5)
0.5	1470	1006	1170	1557	1920
0.2	1581	1154	1310	1667	2035

Refer to Blower Airflow Specification Sheet on the Napoleon website for more information.

FIGURE 34

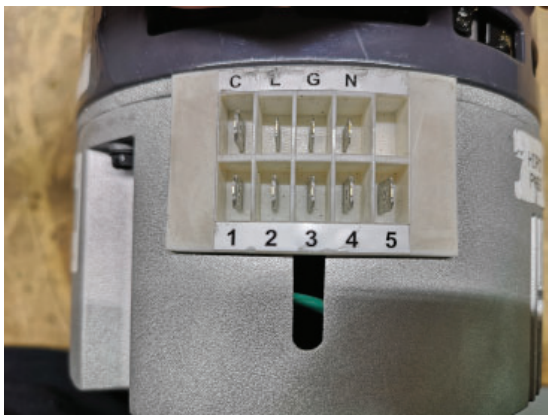

18.4 CONTINUOUS FAN OPERATION

When the thermostat continuous fan (G) switch is on without a call for heat or cooling, the indoor fan is immediately energized. The fan remains energized as long as the call for fan remains without a call for heat or cooling. This feature allows continuous circulation of air between calls for heating or cooling.

If a call or heat (W) occurs during continuous fan, the blower will remain energized, the call for heat overrides the fan.

If a call for cool (Y) occurs simultaneously with the call for fan (G), the call for cool overrides the call for fan.

See Air Flow Data Table 7.

H22.3.1A

19.0 MAINTENANCE AND TROUBLESHOOTING

⚠ WARNING ⚠

DISCONNECT THE ELECTRICAL POWER SUPPLY TO THE FURNACE BEFORE ATTEMPTING ANY MAINTENANCE. FAILURE TO DO SO CAN CAUSE ELECTRICAL SHOCK RESULTING IN PERSONAL INJURY OR LOSS OF LIFE.

⚠ CAUTION ⚠

LABEL ALL WIRES PRIOR TO DISCONNECTION WHEN SERVICING CONTROLS. WIRING ERRORS CAN CAUSE IMPROPER AND DANGEROUS OPERATION.

ALWAYS VERIFY PROPER OPERATION AFTER SERVICING.

H3.25.2

19.1 AIR FILTER

The air filter should be inspected frequently and cleaned or replaced as necessary. We recommend a monthly inspection at first, perhaps coinciding with the arrival of the monthly fuel bill as a reminder. The frequency may be increased or decreased depending on experience and conditions.

Dirty filters result in higher than normal operating temperatures, and lower efficiency.

Some paper media high efficiency filters, sometimes identified as HEPA filters can do an effective and excellent filtration of the air; however, some models may also cause a large pressure drop across the filter. The contractor should assess the capabilities of the duct system to deliver sufficient air flow if this type of filter is considered.

RECOMMENDED: Electronic air cleaners using electrostatic precipitation to remove dust are an excellent filtration device when used in conjunction with a pre-filter. A 16” x 25” (406mm x 635mm) model is an ideal fit with this furnace in the case of a side mounted return air inlet. The integrated furnace control is supplied with an electrical terminal for use with electronic air cleaners.

NOTE
If two return air inlets are used, both must be equipped with filters.

⚠ CAUTION ⚠

DO NOT OPERATE THE FURNACE FOR PROLONGED PERIODS OF TIME WITHOUT AN AIR FILTER.

A PORTION OF THE DUST ENTRAINED IN THE AIR MAY LODGE IN THE SUPPLY AIR DUCTWORK AND REGISTERS. ANY RECIRCULATED DUST PARTICLES WILL BE HEATED AND CHARRED BY CONTACT WITH THE FURNACE HEAT EXCHANGER. THIS RESIDUE WILL SOIL CEILINGS, WALLS, DRAPERY, CARPETS, AND OTHER HOUSEHOLD ARTICLES.

H23.1

19.2 LUBRICATION

Both the exhauster motor and circulating fan motor are sealed bearing type motors. Neither requires routine lubrication. Excess lubrication will void the warranty, shorten the service life of the motors, and will attract the buildup of dust and dirt.

H23.2.3

19.3 CLEANING

It is advisable to keep dust build-up on warm surfaces to a minimum, since dust, in some cases, can be a combustible.

Dust build-up in the circulating fan can impair blower performance; therefore, reduce efficiency.

The recovery coil is located immediately above the blower assembly. Over time, it may become coated with dust. To clean the recovery coil:

1. Turn off electrical power to the furnace.
2. Remove the heat exchanger access door and the blower access door
3. Remove the screw thread covers of the screws attaching the heat exchanger to the division panel and blower assembly.
4. Remove the screws fastening the blower assembly to the division panel and heat exchanger assembly using a 1/4” hex drive.

⚠ CAUTION ⚠

LABEL ALL WIRES PRIOR TO DISCONNECTION WHEN SERVICING CONTROLS. WIRING ERRORS CAN CAUSE IMPROPER AND DANGEROUS OPERATION.

ALWAYS VERIFY OPERATION AFTER SERVICING.

5. Remove the drain hoses from the condensate trap and ensure any spillage is cleaned up.
6. Unplug Molex connectors and snip tie wire from harness from control board panel *(Figure 4)* and place harness into upper vestibule.

FIGURE 4

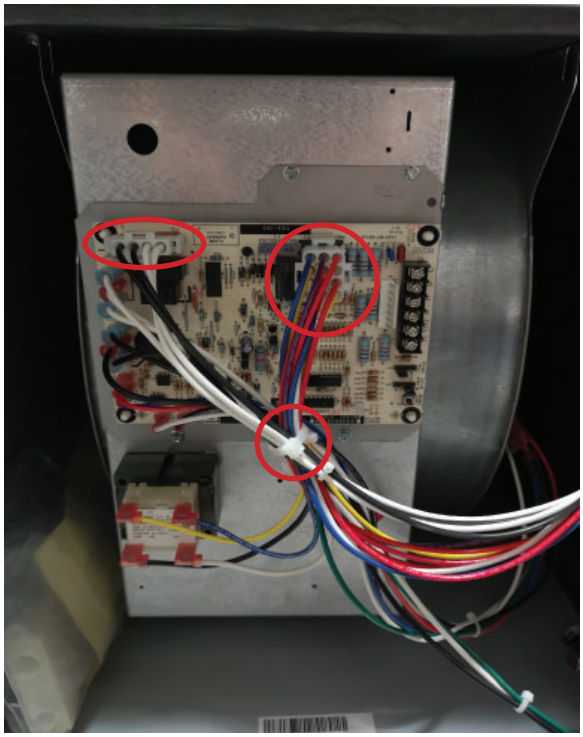

7. Pull the heat exchanger assembly out.

8. Once the heat exchanger assembly has been removed, the coils may be vacuumed with the soft brush attachment. *(Figure 5)*

FIGURE 5

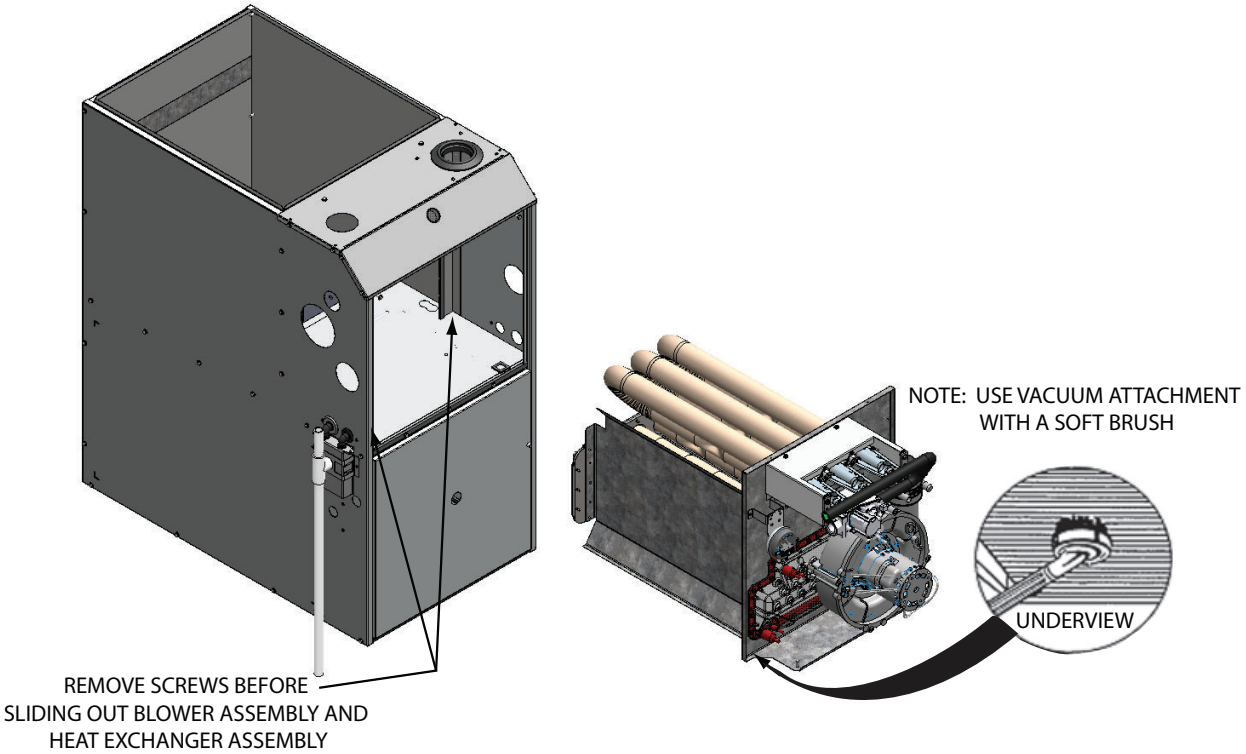

9. Once cleaning is complete, slide the heat exchanger back into its original position using the screw holes on the division panel for alignment.
10. Re-fasten the screws to attach the blower assembly to the division panel and the heat exchanger assembly (screws fastened from lower vestibule through to the upper vestibule) and place thread covers.
11. Reconnect the wire harness to the control board panel (removed in step 6)
12. Hook up the condensate drain lines for proper drainage.
13. Replace the blower access and heat exchanger access doors.
14. Restore electrical power to the furnace.
15. Routine cleaning of the interior of the recovery coil should not be necessary. If evidence develops indicating that a cleaning is necessary, it should be done by a trained and qualified service technician. Evidence may induce large amounts of dirt or debris building up in the condensate drain line.

IMPORTANT:
Be careful not to bend the fins when cleaning. You may wish to leave this maintenance procedure to your service technician.

H27.6.5

⚠ WARNING ⚠

ALWAYS DISCONNECT THE ELECTRICAL SUPPLY TO THE FURNACE BEFORE REMOVING THE BURNER COMPARTMENT ACCESS DOOR.

H3.30

⚠ CAUTION ⚠

THE FURNACE GAS TRAIN IS DESIGNED TO OPERATE AS A SEALED UNIT. BE SURE THAT THE BURNER COMPARTMENT ACCESS DOOR IS PROPERLY IN PLACE BEFORE ATTEMPTING TO RESTART THE FURNACE.

The furnace achieves its high efficiency in three general areas. First, there is no wasteful standing pilot. The furnace consumes no gas in between cycles. Secondly, the furnace is designed to allow very small amounts of excess air in the combustion process. Older furnaces had heat exchangers which were commonly 40% larger than necessary for complete combustion. While this prevented the creation of carbon monoxide, the heated excess air was expelled up the chimney where it could not benefit the interior of the home. Special safety controls now prevent the formation of carbon monoxide.

The third general area is the recovery of the latent heat contained in the flue gas, which is comprised of water vapor and carbon dioxide. By condensing the flue gas in the furnace recovery coil, heat that would otherwise be wasted to the outdoors, is captured and redirected into the duct system where it contributes to home comfort. Each pound of condensation formed releases approximately 970 Btu's. Your furnace may condense up to 1/2 gallon (1.89L) (5 pounds) (2.27kg) of water per hour if running continuously.

This condensation must be properly disposed into a sump or drainage system. The condensate lines must remain clear and free flowing. Do not allow plastic drain lines to become pinched or kinked. A blocked drain line can cause the furnace to operate erratically, or not at all.

IMPORTANT:
Your furnace should be cleaned and inspected annually by a trained and qualified service technician. Your service technician has the knowledge and test equipment to determine the condition of your furnace.

H27.6.2

19.4 TROUBLESHOOTING FLOWCHART

SEQUENCE OF OPERATION

Troubleshooting Flowchart

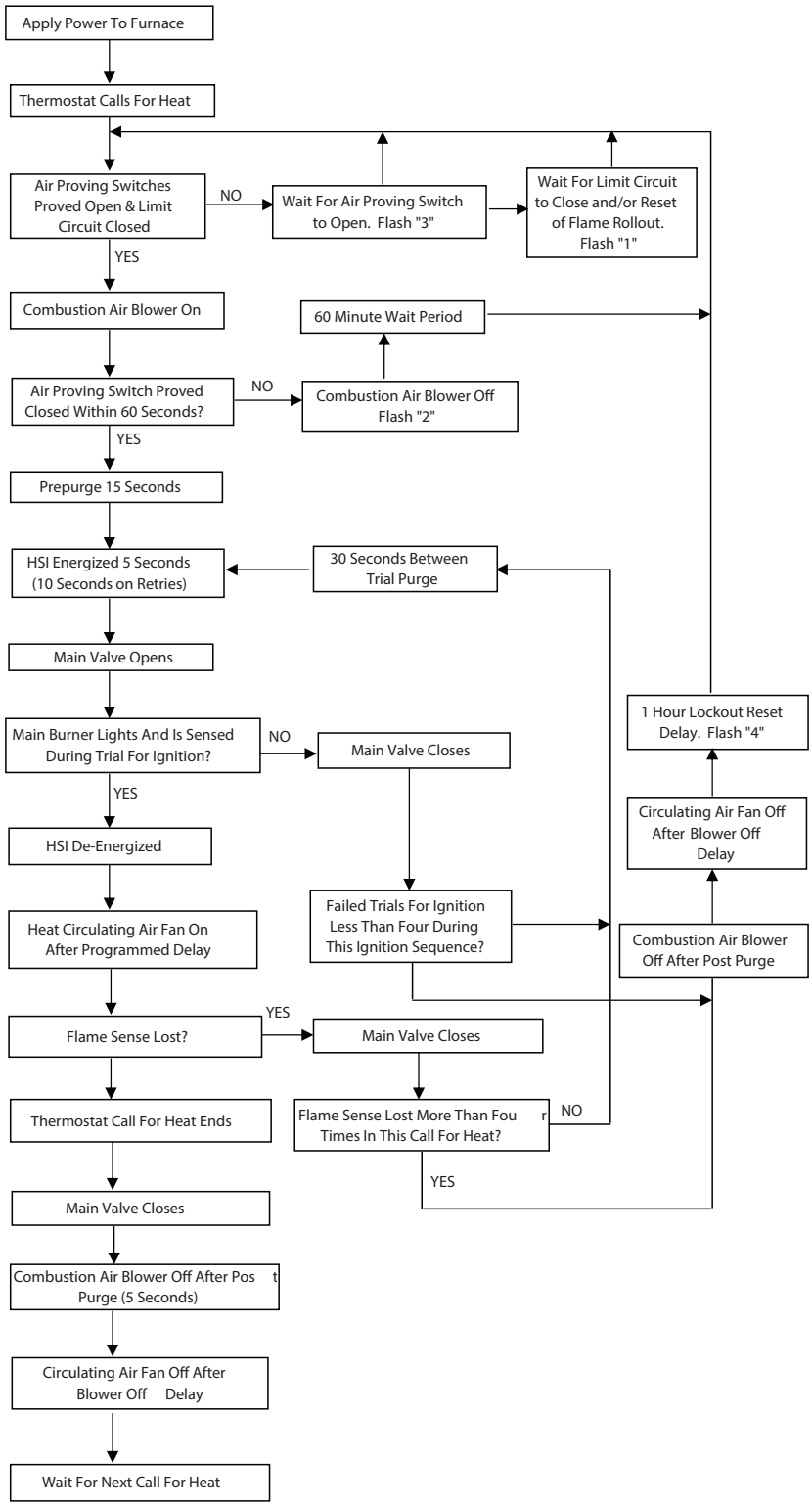

H23.3.1

19.5 DIAGNOSTIC CODES FOR STATUS LED

A 3 colour LED is provided to indicate system faults. LED codes are as follows:

- LED Off - No power to control, push button switch pressed, or control fault
- LED Steady On (any colour) - Control hardware fault detected
- Slow Green Flash - No call for heat, no active errors
- Slow Orange Flash - Call for heat present, no active errors
- Rapid flash - Incorrect 24VAC phasing/twinning errors

STATUS LED	FAULT CONDITION
Red LED indicates following codes:	
LED OFF	No power to control or control hardware fault detected
LED ON	Normal operation
1 Flash	High limit switch open
2 Flashes	Pressure switch open with inducer on
3 Flashes	Pressure switch closed with inducer off
4 Flashes	Lockout due to too many failed ignition attempts (1 hour lockout)
5 Flashes	L1/Neutral Polarity problem
6 Flashes	Too many limit trips within one call for heat
7 Flashes	Pressure switch cycle lockout
8 Flashes	Lockout due to too many flame dropouts
9 Flashes	Not used
10 Flashes	Flame present with gas valve off

H23.4.1

19.6 FAULT CODE HISTORY

The control stores the last 5 fault codes in memory. When the push button switch is pressed, the control will flash the stored fault codes when the switch is released. The most recent fault code is flashed first, the oldest last.

Fault history may be cleared by holding the push button switch for more than 5 seconds.

H23.5

20.0 WIRE DIAGRAM FOR SINGLE STAGE FURNACE

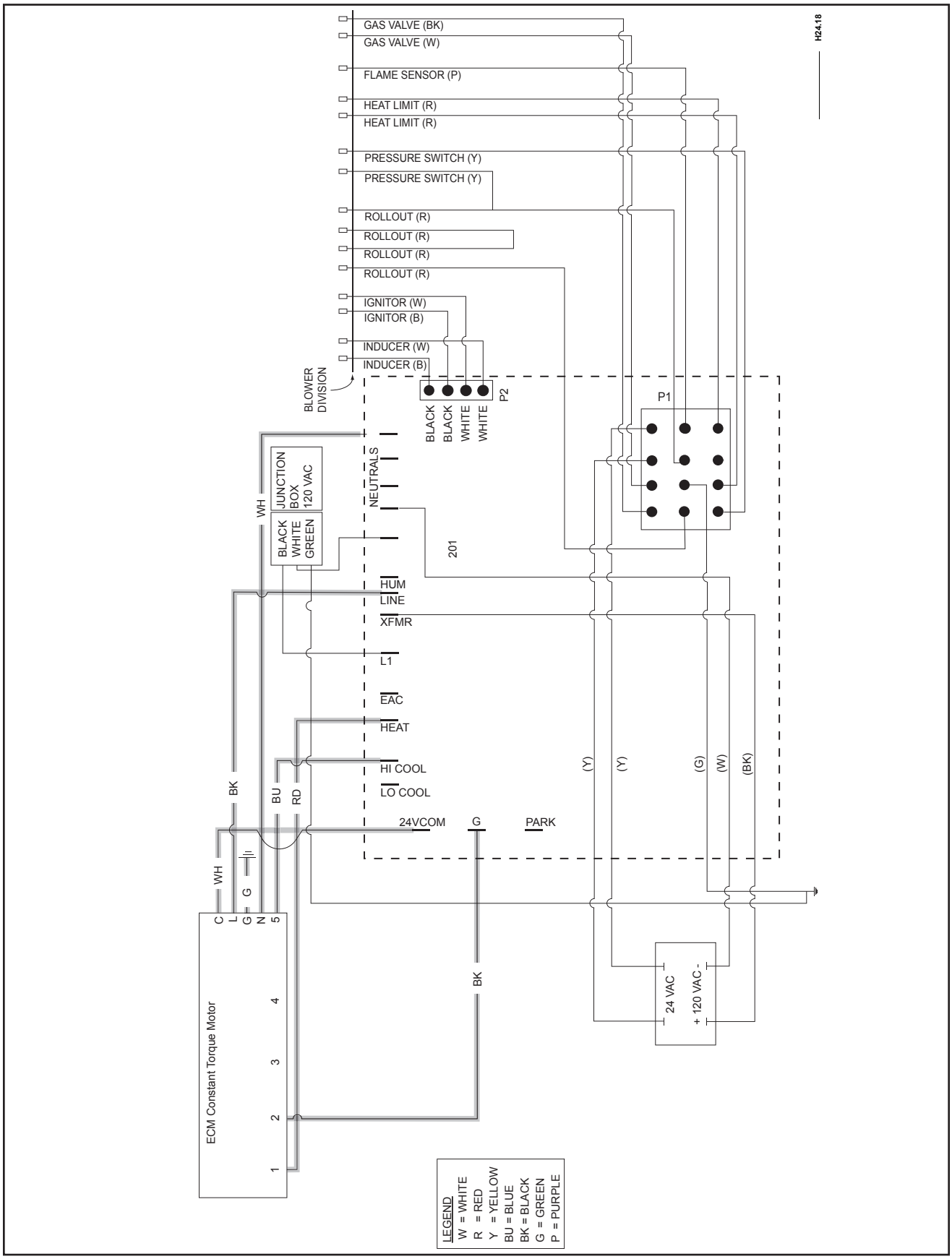

20.1 SINGLE STAGE FURNACE WITH CONSTANT TORQUE MOTOR

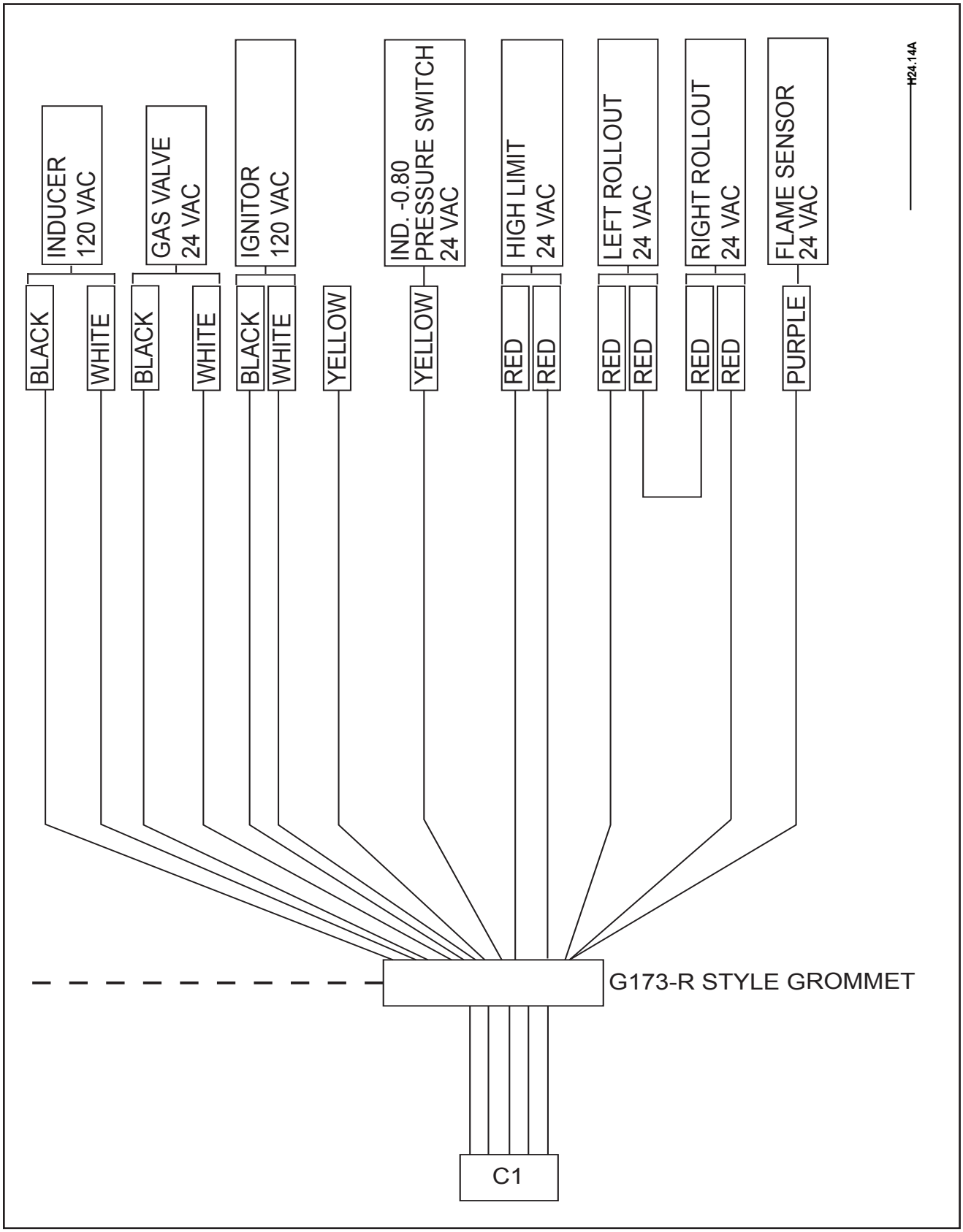

21.0 WARRANTY

Napoleon products are designed with superior components and materials, assembled by trained craftsmen who take great pride in their work. The complete appliance is again thoroughly inspected by a qualified technician before packaging to ensure that you, the customer, receives the quality product that you expect from Napoleon.

NAPOLEON GAS FURNACE PRESIDENT'S LIMITED LIFETIME WARRANTY

This heating unit is warranted by Wolf Steel Ltd. ("Napoleon") to be free from defects in materials and workmanship under normal use and maintenance.

PRESIDENT'S LIMITED WARRANTY *(Registered)*

To the original registered owner and his or her spouse ("owner"), the **HEAT EXCHANGER*** is warranted for the owner's **LIFETIME** or so long as the owner owns the home in which the unit was originally installed, and **all remaining parts** as warranted for a period of **10 YEARS**, except as provided below. These warranties apply only if:

- The unit is installed in an owner-occupied, primary single family residence, and
- The unit is properly registered with Napoleon online within 60 days after the original installation. To register, go to www.napoleonheatingandcooling.com. Some states and provinces do not allow limitations on how long an implied limited warranty lasts or do not allow the exclusion or limition of incidental or consequential damages, so the above limitation or exclusion may not apply to you. This limited warranty gives you specific legal rights, and you may also have other rights which vary by jurisdiction.

With respect to the Heat Exchanger, if the heat exchanger fails within:

- the first 10 years for 9500 / 9600 Series
- the first 15 years for 9700 Series

Napoleon will, at its discretion, provide a new equivalent gas furnace. After the 10 years (15 years - 9700 Series), Napoleon may choose to credit its prorated wholesale value towards the purchase of a new Napoleon furnace.

OR

LIMITED WARRANTY *(Not Registered)*

If not registered within 60 days, the **HEAT EXCHANGER** is warranted for a period of **20 YEARS** (pro rated), and all remaining parts are warranted for a period of **5 YEARS**, all other limitations apply.

With respect to the heat exchanger, Napoleon at its discretion, after 5 years may choose to provide a credit towards a replacement Napoleon gas furnace.

Proof of purchase will be required. Replacements are subject to review and verification by a Napoleon representative.

Warranty ceases to exist if the unit is removed from the location where it was originally installed.

This limited warranty will not apply unless the gas furnace is: (1) installed by a licensed or qualified HVAC technician, (2) installed in accordance with the manufacturer's recommendations in its Installation and Operation Manual, and (3) in compliance with all industry standards, national, provincial/state, and local codes.

Regardless of time of registration, the warranty period begins on the date of the original installation. Where a product is installed in a newly constructed home; the date of installation is the date the homeowner takes possession of the home from the builder. If that date cannot be verified, the warranty period begins three months after the month of manufacture (indicated by the first four digits of the serial number.

As its only responsibility, and your only remedy, Napoleon will furnish a replacement part, without charge for the part only, to replace any part that is found to be defective due to workmanship or materials under normal use and maintenance.

To make a warranty claim, the defective part must be returned to a Napoleon heating and air conditioning products dealer/distributor by a certified or licensed contractor. Any part replaced pursuant to this warranty is warranted only for the unexpired portion of the warranty term applying to the original part.

These warranties do not apply to labour, freight, or any other cost associated with the service, repair or operation of the unit, and diagnostic costs.

Napoleon is not responsible for:

1. Cost or expenses incurred as a consequence of a faulty installation or application.
2. Damage or repairs required as a consequence of faulty installation or application.
3. Damages, defects or failures caused by installation that is not performed in compliance with all applicable federal, provincial, state laws or regulations, and Installation Operating Manual.
4. Damage as a result of vandalism, freight damage, floods, fires, winds, lightning, and accidents, or any acts of nature. Atmospheres contaminated by compounds of chlorine, halogenated hydrocarbons, or other damaging chemicals causing deterioration of components, or other conditions beyond the control of Napoleon.
5. Use of components or accessories not compatible with this unit.
6. Products installed outside Canada, or the United States and its territories.
7. Routine maintenance, but not limited to, cleaning of the coils, filter cleaning and/or replacement and lubrication.
8. Parts not supplied by Napoleon.
9. If unit is equipped with an ultraviolet bulb, the bulb is warranted for 90 days from date of install.
10. Damage or repairs required as a result of any improper use, maintenance, operation,servicing, cleaning or replacing air filters.
11. Failure to operate due to interruption and/or inadequate electrical service.
12. Damages, defects or failures caused by accidents or negligent or unreasonable use or operation of the unit and its' components, including without limitation, operation beyond rated capacity and operation of electrical components at voltage other than that specified on the rating plate.
13. Napoleon shall not in any event extend warranty coverage to any incidental, consequential or indirect damages.
14. Changes in the appearance of the unit that do not affect its performance.
15. Damages, defects or failures caused by operation of the unit in abnormal environmental conditions (i.e. salt air).
16. Damages, defects or failures caused by conditioned air (return air) supplied to the furnace being greater than 20% from out-of-doors (13°C/55°F min. return air temperature).
17. Damages, defects or failures caused by the furnace being installed downstream from a cooling coil.

** "Heat Exchanger" means the primary combustion heat exchanger for the gas furnace and the secondary or tertiary heat exchanger. The plastic front manifold condensate collector attached to the secondary or tertiary heat exchanger is not considered part of the heat exchanger.*

FOR HOMEOWNERS FUTURE REFERENCE

Model and Serial Number _____

(Serial number located on inside bottom door)

Installation Date _____

Dealer Name _____

Dealer's City/Province-State/Postal-Zip Code _____

Telephone/Fax _____

E-mail Address _____

For further information about this warranty, contact Napoleon Customer Solutions Department at 866-820-8686, email hvac@napoleonproducts.com, or by mail to WOLF STEEL ltd 24 Napoleon Road, Barrie, Ontario L4M 0G8 Canada

www.napoleonheatingandcooling.com

11.01.16/Ge

22.0 REPLACEMENT PARTS LIST

Contact your dealer or the factory for questions concerning prices and policies on replacement parts. Normally all parts can be ordered through your Authorized dealer / distributor.

FOR WARRANTY REPLACEMENT PARTS, A PHOTOCOPY OF THE ORIGINAL INVOICE WILL BE REQUIRED TO HONOUR THE CLAIM.

When ordering replacement parts always give the following information:

- Model & Serial Number of appliance
- Installation date of appliance
- Part number
- Description of part
- Finish

WARNING

FAILURE TO POSITION THE PARTS IN ACCORDANCE WITH THIS MANUAL OR FAILURE TO USE ONLY PARTS SPECIFICALLY APPROVED WITH THIS APPLIANCE MAY RESULT IN PROPERTY DAMAGE OR PERSONAL INJURY.

FOR FURTHER INFORMATION, CONTACT YOUR AUTHORIZED DEALER.

H41.1

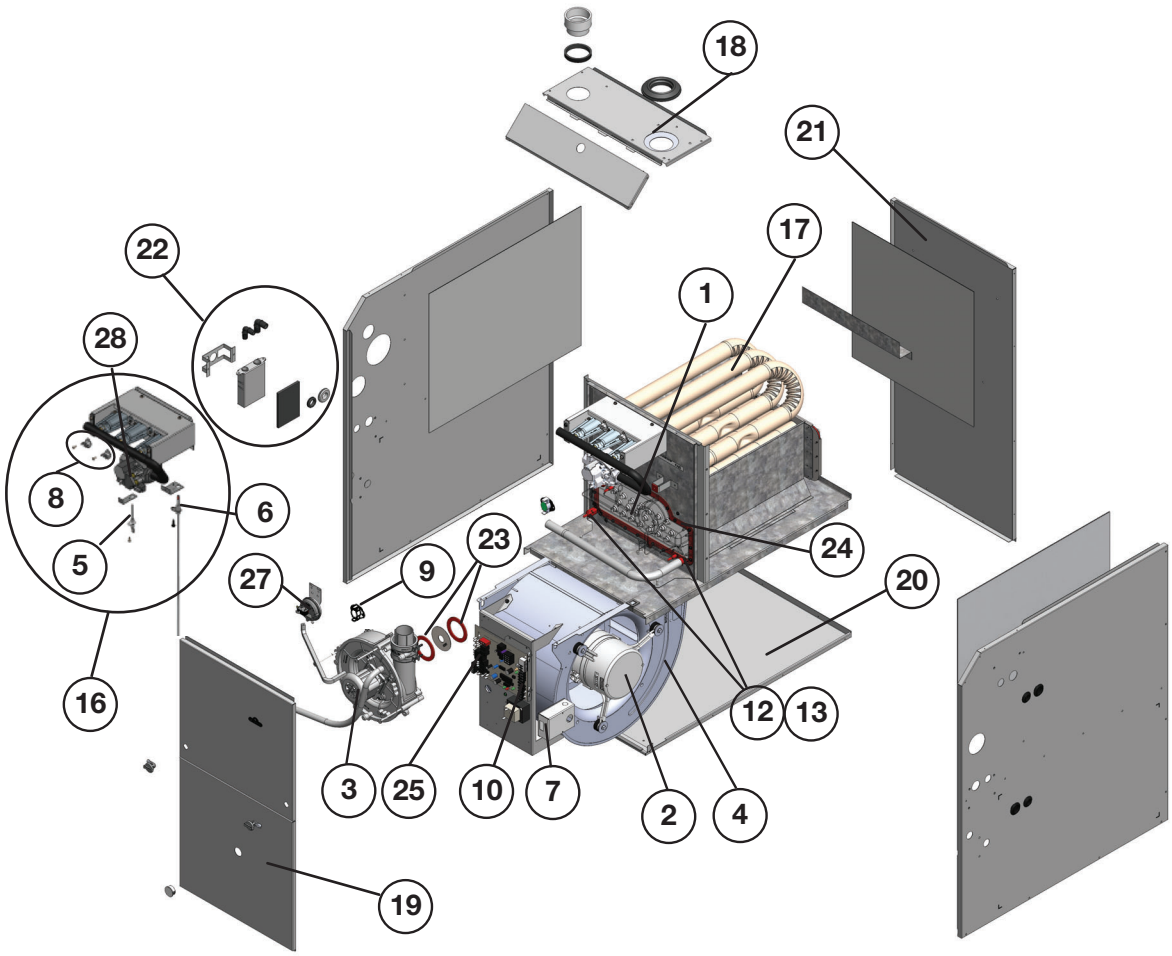

Ref. No	Part Number	Part Description	Stocked
1	W010-3494	ASSY, SMALL FMC W/O CHOKES 30/40/60/80	YES
1	W010-3495	KIT, LARGE FMC W/O CHOKES 100	YES
2	W010-4685	ASSY, MOTOR KIT 1/3HP WPX30	YES
2	W010-4638	ASSY, MOTOR KIT 1/2HP WPX40	YES
2	W010-4639	ASSY, MOTOR KIT 1/2HP WPX60	YES
2	W010-4640	ASSY, MOTOR KIT 1HP WPX80-3	YES
2	W010-4686	ASSY, MOTOR KIT 1HP WPX100	YES
3	W062-0080-SER	EXHAUSTER, TWO SPEED (HIGH COLLAR)	YES
4	W062-0079-SER	BLOWER, 112-8R DD HOUSING	
4	W062-0082-SER	BLOWER, 112-6R DD HOUSING	YES
4	W062-0083-SER	BLOWER, 112-10R DD HOUSING	YES
5*	W010-2562	SENSOR, FLAME - REPLACEMENT	YES
6*	W357-0019-SER	IGNITER, KYOCERA - REPLACEMENT	
7*	W010-2565	SWITCH, BLOWER DOOR	YES
8*	W010-2568	SWITCH, BURNER ROLLOUTS REPL 350ºF	YES
9	W660-0219-SER	ASSY, 200 HIGH HEAT LIMIT KIT RPL	YES
9	W010-2994	ASSY, 180 HIGH HEAT LIMIT KIT RPL	YES
10	W707-0031-SER	TRANSFORMER, 120V 24V 40VA	YES
11*	W470-0026	PAINT, TOUCHUP SILVER	
12	W120-0075-SER	CAP, PRESSURE PORT RED	
13	W120-0076-SER	CAP, DRAIN PORT RED	
14*	W020-1103	FURNACE BAGGIE REPLACEMENT PARTS	
15*	W370-0018	KIT, CONVERSION NG TO LP	YES
15*	W370-0031	KIT, CONVERSION LP TO NG	
16	W100-0151-SER	BURNER BOX, WPX30	YES

Ref. No	Part Number	Part Description	Stocked
16	W100-0150-SER	BURNER BOX, WPX40	YES
16	W100-0124-SER	BURNER BOX, WPX60	YES
16	W100-0125-SER	BURNER BOX, WPX80-3	YES
16	W100-0126-SER	BURNER BOX, WPX100	YES
17	W010-4562	ASSY, HEAT EXCHANGER, 40K	YES
17	W010-4563	ASSY, HEAT EXCHANGER, 60K	YES
17	W010-4564	ASSY, HEAT EXCHANGER 80K	YES
17	W010-4648	ASSY, HEAT EXCHANGER 100K	
18	W475-1646-SER	TOP PANEL, 17.5IN	
18	W475-1700-SER	TOP PANEL, 22.5IN	
19	W225-0405-SER	DOOR, BOTTOM 17.5IN	
19	W225-0408-SER	DOOR, BOTTOM 22.5IN	
20	W475-0846-SER	BASE PANEL, 17.5IN	
20	W475-0891-SER	BASE PANEL, 22.5IN	
21	W475-1641-SER	PANEL, REAR 17.5IN	
21	W475-1703-SER	PANEL, REAR 22.5IN	
22	W010-2768	ASSY, CONDENSATE TRAP	YES
23	W290-0385-SER	GASKET CHOKE	YES
24	W290-0156-SER	GASKET, FRONT MANIFOLD SM	YES
24	W290-0158	GASKET, FRONT MANIFOLD LG	YES
25	W010-2612	CONTROL, INTEGRATED SS ENDURA PRO (GF)	YES
26*	W010-2613	FUSE, 3 AMP SS	YES
27	W010-2752	ASSY, SWITCH DOUBLE PSI RPLCMT (GF)	YES
28*	W010-2573	VALVE, TWO STAGE	YES
29*	W010-2609	EXHAUSTER, SINGLE SPD (GF)	YES

23.0 SERVICE HISTORY

Appliance Service History

This heater must be serviced annually depending on usage.

Date	Dealer Name	Service Technician Name	Service Performed	Special Concerns

43.1

INSTALLER: PLEASE FAMILIARIZE YOURSELF WITH VENTING/DRAINING SECTIONS OF THIS MANUAL BEFORE PROCEEDING WITH THE INSTALLATION. LEAVE THIS MANUAL WITH THE APPLIANCE FOR FUTURE REFERENCE.

CONSUMER: RETAIN THIS MANUAL FOR FUTURE REFERENCE.

NAPOLEON

USER'S INFORMATION MANUAL

UM

WPX-N SERIES

SINGLE STAGE MULTI POSITION HIGH EFFICIENCY (CONDENSING) FORCED AIR GAS FURNACE

SAFETY INFORMATION

WARNING

ELECTRICAL SHOCK, FIRE OR EXPLOSION HAZARD

Failure to follow safety warnings exactly could result in serious injury, death or property damage.

Improper servicing could result in dangerous operation, serious injury, death or property damage.

- Installation and service must be performed by a qualified installer, service agency or the gas supplier.
- Before servicing, disconnect all electrical power to furnace.
- When servicing controls, label all wires prior to disconnecting. Reconnect wires correctly.
- Verify proper operation after servicing.
- Do not store or use gasoline or other flammable vapors and liquids in the vicinity of this or any other appliance.
- WHAT TO DO IF YOU SMELL GAS:
  - Do not try to light any appliance.
  - Do not touch any electrical switch; do not use any phone in your building.
  - Leave the building immediately.
  - Immediately call your gas supplier from a neighbour's phone. Follow the gas supplier's instructions.
  - If you cannot reach your gas supplier, call the fire department.

AHRI CERTIFIED® www.ahridirectory.org Residential Furnaces DOE 10 CFR Part 430

ENERGUIDE

Quality System Certified To ISO 9001-2015

MANUFACTURER RESERVES THE RIGHT TO DISCONTINUE, OR CHANGE AT ANY TIME, SPECIFICATIONS OR DESIGNS WITHOUT NOTICE AND WITHOUT INCURRING OBLIGATIONS.

Wolf Steel Ltd., 24 Napoleon Rd., Barrie, ON, L4M 0G8 Canada /
103 Miller Drive, Crittenden, Kentucky, USA, 41030
Phone (705)721-1212 • Fax (705)722-6031 • www.napoleon.com • hvac@napoleon.com

TABLE OF CONTENTS

1.0	**SAFETY SYMBOLS AND WARNINGS**	**67**
2.0	**SAFETY ISSUES**	**68**
	2.1 GENERAL SAFETY RULES	71
3.0	**FURNACE OPERATION INFORMATION**	**72**
	3.1 STARTING THE FURNACE	72
	3.2 SHUTTING DOWN THE FURNACE	73
	3.3 OPERATING TIPS	73
4.0	**ROUTINE MAINTENANCE BY HOMEOWNER**	**74**
	4.1 AIR FILTER	74
	4.2 ROUTINE EXAMINATION	74
	4.3 ANNUAL INSPECTION/SERVICE	75
	4.4 FURNACE APPEARANCE	75
	4.5 SEQUENCE OF OPERATION	76
	4.6 VARIATIONS	76
	4.7 TERMINATIONS	76
5.0	**HOMEOWNER'S REFERENCE**	**77**

UM

IMPORTANT:
Read these instructions thoroughly before attempting to operate this furnace.

DO NOT DESTROY THIS MANUAL
Please read carefully and keep in a safe place for future reference by a service technician.

H1.21

1.0 SAFETY SYMBOLS AND WARNINGS

Understand and pay particular attention to the words DANGER, WARNING, and CAUTION and the following defined symbols are used throughout this manual to notify the reader of potential hazards of varying risk levels.

⚠ DANGER ⚠

INDICATES AN IMMINENTLY HAZARDOUS SITUATION WHICH, IF NOT AVOIDED, WILL RESULT IN DEATH OR SERIOUS INJURY.

⚠ WARNING ⚠

INDICATES A POTENTIALLY HAZARDOUS SITUATION WHICH, IF NOT AVOIDED, COULD RESULT IN DEATH OR SERIOUS INJURY.

⚠ CAUTION ⚠

INDICATES A POTENTIAL HAZARDOUS SITUATION WHICH, IF NOT AVOIDED, MAY RESULT IN MINOR OR MODERATE INJURY. IT MAY ALSO BE USED TO ALERT AGAINST UNSAFE PRACTICES.

H3.3.1

⚠ WARNING ⚠

SHOULD OVERHEATING OCCUR OR THE GAS BURNERS FAIL TO SHUT OFF, CLOSE THE MANUAL GAS VALVE FOR THE FURNACE BEFORE SHUTTING OFF THE ELECTRICAL POWER TO THE FURNACE. FAILURE TO DO SO CAN CAUSE AN EXPLOSION OR FIRE RESULTING IN PROPERTY DAMAGE, PERSONAL INJURY OR LOSS OF LIFE.

BEFORE RESTARTING THE FURNACE, CHECK ALL PLASTIC VENTS AND WIRES FOR DAMAGE.

H3.24

2.0 SAFETY ISSUES

This furnace has been designed to deliver many years of efficient, dependable service. With regular maintenance, some of which requires the attention of a qualified installer, service agency or gas supplier, some of which you may do yourself, the furnace will operate satisfactorily over many heating seasons.

Please read this manual to familiarize yourself with safety procedures, operation, and routine maintenance procedures. Figure 1 is provided to help identify the components of your furnace.

UM

Do not use this furnace if any part has been under water. A flood-damaged furnace is extremely dangerous. Attempts to use the furnace can result in fire or explosion. A qualified service agency should be contacted to inspect the furnace and to replace all gas controls, control system parts, electrical parts that have been wet or the furnace, if deemed necessary.

H25.0.1

FIGURE 1 - FURNACE COMPONENTS

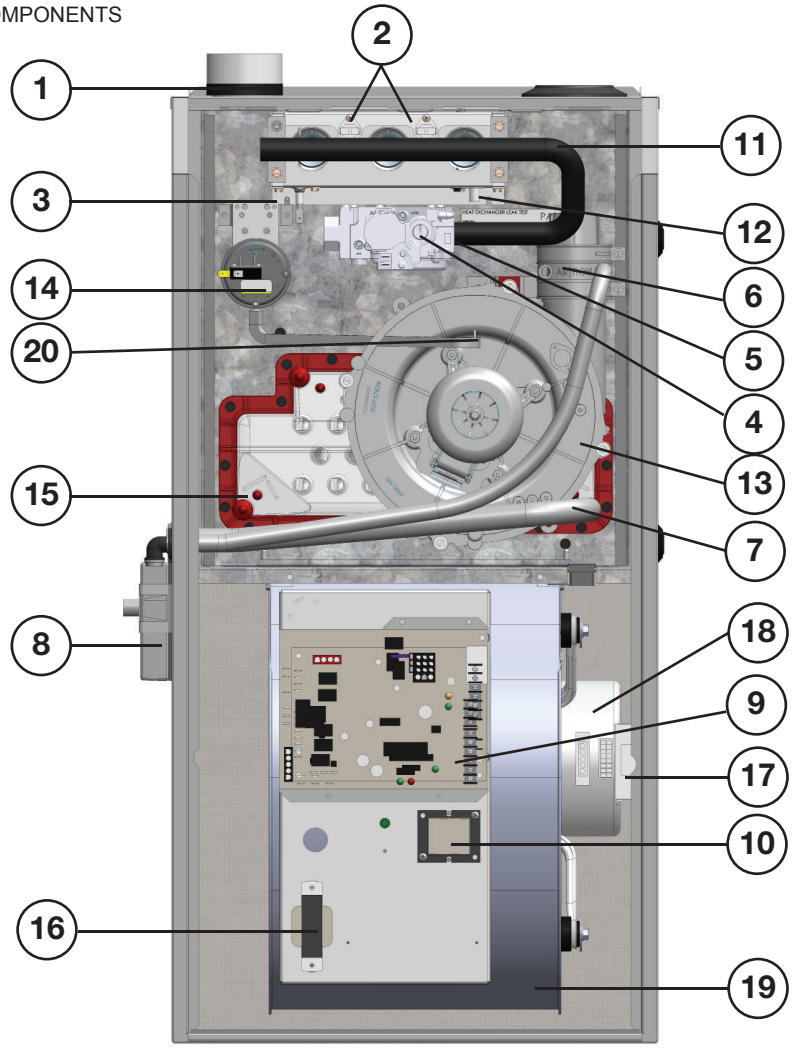

LEGEND

1. Combustion Air Intake Fitting
2. Flame Roll-Out Switch (2)
3. Flame Sensor
4. Single Stage Gas Valve
5. Air High Temperature Limit (behind gas valve)
6. Vent Drain Assembly Coupling
7. Drain for Recovery Coil (3)
8. Condensate Trap
9. Single Stage Integrated Furnace Control (IFC)
10. Transformer for 24 VAC / 40VA
11. Burner Assembly
12. Hot Surface Igniter (HSI)
13. Single Speed Exhauster
14. Pressure Switch Assembly
15. Front Manifold Cover Pressure Tap (3)
16. PFC “Choke Coil” (required on ¾ and 1 Hp units)
17. Door Switch and Junction Box
18. Blower Motor
19. Circulating Air Blower
20. Exhauster Pressure Tap

⚠ WARNING ⚠

FIRE OR EXPLOSION HAZARD - IF THE INFORMATION IN THESE INSTRUCTIONS IS NOT FOLLOWED EXACTLY, A FIRE OR EXPLOSION MAY RESULT, CAUSING PROPERTY DAMAGE, PERSONAL INJURY OR LOSS OF LIFE.

H3.26

⚠ WARNING ⚠

DO NOT STORE OR USE GASOLINE OR OTHER FLAMMABLE VAPORS AND LIQUIDS, OR OTHER COMBUSTIBLE MATERIALS IN THE VICINITY OF THIS OR ANY OTHER APPLIANCE.

WHAT TO DO IF YOU SMELL GAS

- DO NOT TRY TO LIGHT ANY APPLIANCE.
- DO NOT TOUCH ANY ELECTRICAL SWITCH; DO NOT USE ANY PHONE IN YOUR BUILDING.
- IMMEDIATELY CALL YOUR GAS SUPPLIER FROM A NEIGHBOUR'S PHONE, OR A CELLULAR PHONE FROM A LOCATION WELL AWAY FROM THE BUILDING. FOLLOW THE GAS SUPPLIER'S INSTRUCTIONS.
- IF YOU CANNOT REACH YOUR GAS SUPPLIER, CALL THE FIRE DEPARTMENT.
- DO NOT RE-ENTER THE BUILDING UNTIL AUTHORIZED TO DO SO BY THE GAS SUPPLIER OR THE FIRE DEPARTMENT.

IMPROPER INSTALLATION, ADJUSTMENT, ALTERATION, SERVICE OR MAINTENANCE CAN CAUSE INJURY, PROPERTY DAMAGE OR LOSS OF LIFE. REFER TO THIS MANUAL.

INSTALLATION AND SERVICE MUST BE PERFORMED BY A QUALIFIED INSTALLER, SERVICE AGENCY OR THE GAS SUPPLIER.

H3.27

⚠ WARNING ⚠

IMPROPER INSTALLATION, ADJUSTMENT, ALTERATION, SERVICE OR MAINTENANCE CAN CAUSE PROPERTY DAMAGE, PERSONAL INJURY OR DEATH.

FOR ASSISTANCE OR ADDITIONAL INFORMATION, CONSULT A QUALIFIED INSTALLER, SERVICE AGENCY, OR YOUR GAS SUPPLIER.

H3.4.1

⚠ WARNING ⚠

DEVICES ATTACHED TO EITHER THE VENT OR COMBUSTION AIR INTAKE FOR THE PURPOSES OF EXCEEDING THE LIMITATIONS DESCRIBED IN THE INSTALLATION MANUAL, INCLUDING FIELD INSTALLED INDUCED BLOWER FANS HAVE NOT BEEN TESTED AND ARE NOT INCLUDED IN THE DESIGN CERTIFICATION OF THE FURNACE.

THE MANUFACTURER CANNOT AND WILL NOT SPECULATE ON THE EFFECTS OF SUCH MODIFICATIONS AND CANNOT AND WILL NOT BE RESPONSIBLE FOR INJURY OR DAMAGE CAUSED BY THE USE OF SUCH UNTESTED AND/OR UNCERTIFIED DEVICES, ACCESSORIES OR COMPONENTS.

H3.28

Most natural gas systems and all LP gas systems have a service regulator located near the point where the gas piping enters the building.

The propane tank will normally have an additional first stage regulator located at the tank outlet valve. All of these regulators (located outdoors) will have a vent. *(Figure 2)*

It is important for these vents to remain clear. Do not allow moisture, which could freeze, to build up in the vent. If you see moisture building up in the regulator vent, contact your gas supplier.

H25.0.2

FIGURE 2 - GAS REGULATOR VENT

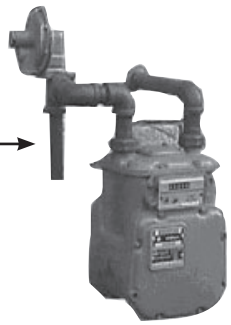

⚠ WARNING ⚠

OBSTRUCTION OF THE AIR VENT ON AN LP (PROPANE) CYLINDER OR TANK REGULATOR CAN CAUSE EXPLOSION OR FIRE RESULTING IN PROPERTY DAMAGE, SEVERE PERSONAL INJURY OR DEATH.

YOUR GAS SUPPLIER SHOULD PERIODICALLY INSPECT AND CLEAN THE AIR VENT SCREEN TO PREVENT ANY OBSTRUCTION. KEEP PROTECTIVE REGULATOR COVER IN PLACE, AS EXPOSURE TO THE ELEMENTS CAN CAUSE ICE BUILDUP AND REGULATOR FAILURE.

H3.29

2.1 GENERAL SAFETY RULES

1. Combustible materials should not be stored against or around the furnace. Keep the furnace area clear and free from all combustible materials such as newspapers, rags, cardboard, foam, plastic, paper backed fiberglass insulation, clothing, etc. This applies especially to gasoline and other flammable vapors and liquids.
2. This furnace is CSA certified as a Category IV indirect or direct vent appliance. It is designed to operate as a single pipe (inside combustion air) or two pipe (outdoor combustion air) system. A furnace needs adequate amounts of combustion air to operate properly. Do not block or obstruct the air-intake terminal on the furnace, or air openings supplying combustion air to the area where the furnace is installed, if operating as a single pipe system. There are many areas from which your furnace could be receiving combustion air including from within the heated area (inside air), from outdoors, from an attic or crawl space. If renovations are done, be sure that air supply openings are not inadvertently covered over with insulation, vapor barrier, or similar construction material.
3. All doors and panels must be in place during normal furnace operation. Attempting to operate the furnace with missing doors or panels could lead to the creation of carbon monoxide gas.
4. If the furnace is installed in a confined space or if you intend to build a furnace room where insulation is present, be aware that some insulating materials are combustible. Do not allow building insulating materials to come into contact with the furnace.
5. Any additions, alterations or conversions required in order for the furnace to properly match the application requirements must be done by a qualified installation contractor, service agency or gas supplier, using factory specified or approved parts.
6. Familiarize yourself with the location of the furnace gas manual shut-off valve and any electrical switch, fuse or circuit breaker associated with the furnace.
7. Do not allow snow, ice or debris to accumulate around the outdoor furnace exhaust and combustion air intake terminals. Blockage of the exhaust or combustion intake terminals can result in inadequate performance or nuisance shut-downs.
8. Familiarize yourself with the location of your furnace filter or filters. A blocked air filter will reduce efficiency, increase fuel consumption, raise the furnace operating temperature, and shorten the life of furnace components.
9. Do not cover return air grills and supply air registers with drapes, curtains, throw rugs, etc.
10. Avoid shutting off supply air registers in the interests of saving heat. While there is some validity to this practice with space heating, there is little to be gained in central heating systems. The furnace requires a quantity of air passing over the heat exchanger to operate within design temperatures. Reducing the number of supply air registers available for air delivery may have the unforeseen consequence of raising the furnace operating temperature, reducing furnace efficiency, and shortening the life of the furnace components.

H25.1

3.0 FURNACE OPERATION INFORMATION

3.1 STARTING THE FURNACE

During the heating season, the operation of the furnace is fully automatic.

1. First read these instructions and safety notices thoroughly.
2. Set the thermostat to below the current set point.
3. Ensure that all supply air registers and return air grills are open.
4. Turn off the electric power to the furnace.
5. Remove the burner access door.
6. Ensure that the furnace manual shut-off gas valve is in the “ON” position. The valve handle is normally in-line with the gas pipe and valve body when it is in the “ON” position; perpendicular to the gas piping and valve body when it is in the “OFF” position.
7. Turn the manual gas valve switch to the “OFF” position. *(Figure 3)*
8. Wait 5 minutes to clear out any gas. If, after this time you smell gas, STOP. Turn the appliance manual shut-off valve to the “OFF” position. If burning LP gas, smell for gas near the floor since propane and butane are both heavier than air. If after this time you do not smell gas, continue to the next step.
9. Turn the manual gas valve switch to the “ON” position.
10. Replace the burner access door, ensuring that it is properly in place.
11. Restore the electric power to the furnace.
12. Adjust the thermostat to the desired setting. If the thermostat also controls an air conditioning system, ensure that the thermostat system switch is in the “HEAT” or “AUTO” mode.

If this is the first time that the furnace has undergone a trial ignition since installation, or if there has been work done on the gas lines, the furnace might not light because of air trapped in the gas supply line.

Simply turn the thermostat down to below the current set point, wait 5 minutes, then adjust the thermostat to the desired setting. If the problem persists, proceed to *“Furnace Shut-Down Procedure”* and call your Installer, service agency or gas supplier.

H26.1

FIGURE 3

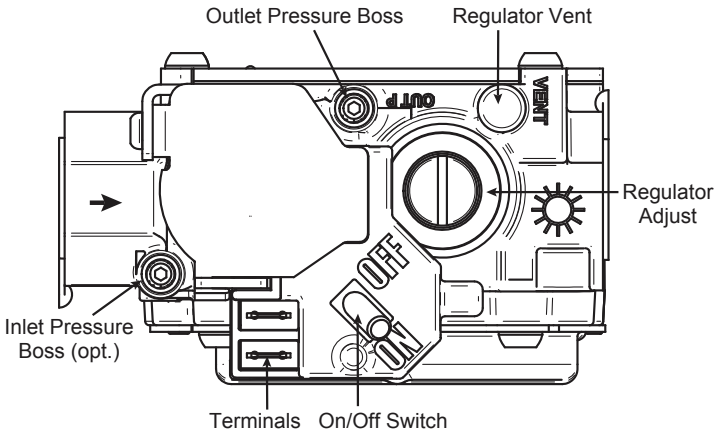

3.2 SHUTTING DOWN THE FURNACE

1. Set the thermostat to its lowest setting.
2. Shut off electric power to the furnace.
3. Turn the furnace manual shut-off valve to the “OFF” position.
4. Remove the burner access door, turn the manual gas valve switch to the “OFF” position, then re-install the burner access door.

IMPORTANT:
If you intend to be away from home for lengthy periods of time during the non-heating season, it is advisable to follow the furnace shut down procedure.

H26.2

3.3 OPERATING TIPS

1. Clean air filters maximize efficiency, and reduce heating costs.
2. During the heating season, keep windows and doors closed to reduce the heating load on the system.
3. Avoid excessive use of kitchen exhaust hoods and other exhaust fans to reduce the heating load on the system.
4. Arrange the furniture and drapes so that the supply air registers and return air grills are unobstructed.
5. If you have a perimeter duct system, ideally, the warm air should bathe the interior walls. Avoid the use of plastic deflectors on the supply air registers which tend to short circuit the warm air straight into the return air grills.
6. Avoid placing heat producing appliances such as televisions, radios, lamps, etc. in a location to influence the thermostat.
7. Keep combustible articles at least 3 feet (0.91m) away from the furnace. Do not block access for servicing the furnace Do not use the combustion air or exhaust piping as a hanger for clothes or anything else.

IMPORTANT:
NEVER ATTEMPT TO OPERATE THE FURNACE WITHOUT THE BLOWER DOOR AND COMBUSTION COMPARTMENT DOOR IN PLACE OR WHEN THE BLOWER HAS FAILED.

H26.3

4.0 ROUTINE MAINTENANCE BY HOMEOWNER

4.1 AIR FILTER

⚠ CAUTION ⚠

DO NOT OPERATE YOUR FURNACE OR AIR CONDITIONER FOR EXTENDED PERIODS OF TIME WITHOUT AN AIR FILTER.

A portion of the dust entrained in the air may temporarily lodge in the air duct runs and the supply registers. Any recirculated dust particles will be heated and charred by coming into contact with the heat exchanger. This residue will soil ceilings, walls, drapes, carpets, furniture, and other household articles.

⚠ WARNING ⚠

DISCONNECT THE ELECTRICAL POWER SUPPLY TO THE FURNACE BEFORE ATTEMPTING ANY MAINTENANCE. FAILURE TO DO SO CAN CAUSE ELECTRICAL SHOCK RESULTING IN PERSONAL INJURY OR LOSS OF LIFE.

H3.25.1

Consult your installation contractor or service technician if you have any questions on instructions for removing the air filter.

⚠ CAUTION ⚠

BE SURE THAT THE FILTER IS RE-INSTALLED WITH THE AIRFLOW DIRECTION IDENTICAL TO ITS PREVIOUS USE. REVERSING THE FILTER WILL CAUSE DUST TRAPPED WITHIN THE FILTER TO BREAK FREE AND RECIRCULATE WITHIN THE DUCT SYSTEM.

H27.1

4.2 ROUTINE EXAMINATION

IMPORTANT:
We recommend that your furnace and exhaust/combustion air vents be checked by a qualified service technician once a year.

It is good practice to give a quick inspection of your furnace each time you inspect or clean the air filter. Things to check:

- Check the furnace for obvious signs of deterioration.
- Check the venting and combustion air piping to ensure that it is still fastened to the furnace. It should not sag, and should have a 1/4” (6mm) per foot (305mm) slope upwards, to the outside wall or termination.
- There should be no water marks on the floor under the venting. Water marks may indicate a leaking pipe joint.
- All ductwork should be secured to the furnace, and all ductwork should be solidly supported throughout the heating system.
- Water should flow easily through the condensate drain line. You may be able to observe this while the furnace is operating if your condensate drain line from the drain trap assembly terminates at a floor drain or sump pit. If clear plastic was used, it may yellow with age; however, the contents should be reasonably clear. Excess debris in the drain line may indicate a problem which should be referred to your service contractor. If the drain lines are opaque, your service technician will check them during the annual servicing.
- The gas burner should be observed from time to time during the heating season to ensure that the flames are clean and blue. A bit of orange color in the flame is not likely to be a problem and is probably dust particles burning. If you observe lazy yellow flames, call your heating or service contractor immediately. The yellow flames inevitably lead to soot-ups.
- The combustion air and exhaust terminals should be inspected occasionally to ensure that they are free of obstructions and debris.

H27.3A

4.3 ANNUAL INSPECTION/SERVICE

It is recommended that the furnace be inspected annually by a qualified installation contractor, service agency or fuel supplier. Your annual inspection will normally cover the following:

HEAT EXCHANGER - The heat exchanger should be inspected for corrosion. The flue passages (heat exchanger tubes) should be free of scale or excessive corrosion.

BURNERS - The burners should be inspected to ensure that they are free of deterioration.

⚠ CAUTION ⚠

BE CAREFUL WHEN WORKING ON THE BURNER ASSEMBLY. THE HOT SURFACE IGNITER IS FRAGILE AND CAN BREAK EASILY.

The flame sensor should be inspected and cleaned with fine steel wool or Scotch-Brite™ scrubbing pad. The wiring connection should be checked to ensure that it is tight and corrosion free.

DRAINAGE - The condensate drainage system should be inspected and cleaned if necessary. If the drain trap assembly, or any other component becomes blocked, condensate may backup into the secondary or primary heat exchanger causing nuisance trip-outs of the pressure switch(s) or roll out switch(s). The condensate should be observed for signs of dirt, carbon, debris, etc.

CIRCULATING FAN - The condition of the circulating fan should be checked to ensure that it is free of excessive dust buildup, debris, etc. The mechanical fasteners should be inspected and checked for proper tightness and parts alignment. The motor ventilation ports should be cleaned if necessary to prevent restriction to cooling by air over the motor.

ELECTRICAL - All electrical connections should be examined to ensure that they are tight and corrosion free. Repair any connections that have become loose or corroded.

FURNACE OPERATION - The furnace should be cycled during the annual inspection and servicing to:

1. Test all safety related controls.
2. Determine that the temperature rise falls within the range shown on the appliance rating plate.
3. Ensure that the burner ignition is smooth and that the flames are smooth soft blue, and not impinging on the heat exchanger.
4. Ensure gas meter is timed, and/or furnace manifold pressure checked to confirm the furnace is operating at the input listed on the rating plate.

H27.4.1

4.4 FURNACE APPEARANCE

The furnace exterior finish is a durable automotive like coating. It may be washed with mild soap if necessary. Galvanized metal surfaces require no maintenance.

H27.5

4.5 SEQUENCE OF OPERATION

1. Room temperature drops causing the room thermostat call for heat by connecting “W” to “R”. The control verifies the limit switch is closed and the pressure switch(s) are open. The control energizes the exhauster motor and waits for the pressure switch(s) to close. The exhauster remains energized for a 15 second pre-purge period. If the pressure switch(s) do not close within 60 seconds, the control will flash “2” on the Red Status LED, and de-energize the exhauster for 60 minutes.
2. When the 15 second pre-purge time has elapsed, the control energizes the HSI output for a 15 second warm-up period (15 seconds on retries). The control energizes the gas valve. 4 seconds after the gas is energized, the control de-energizes the HSI output and leaves the gas energized another 1 second for flame proving. If flame is present at the end of trial for ignition time, the control leaves the gas valve energized, exhauster on, and begins heat blower on delay.
3. Blower on delay time begins when the gas valve is energized.
4. Blower off delay is handled by the control board. When the thermostat “W” call ends, the control de-energizes the gas valve, and starts the blower off delay period.

IN THE EVENT OF FLAME FAILURE:

If flame is lost, the control de-energizes the gas valve within 2 seconds, continues running the exhauster motor, and begins timing the inter-purge delay. The indoor blower motor will be energized and/or remain energized on heat speed for the delay off time. When the inter-purge delay is over, the control will re-cycle up to 5 flame losses (4 re-cycles) within a single call for heat before going into lockout. The control flashes “8” on the Red LED if lockout is due to too many flame dropouts (1 hour lockout).

H21.3.1B

4.6 VARIATIONS

If your system includes air conditioning, your thermostat will likely have two switches. The first switch is the system switch. The switch settings usually include HEAT, COOL, and OFF. Some thermostats have system switches which include HEAT, COOL, AUTO, and OFF. The system switch must be in the HEAT or AUTO position for the furnace to run.

The second switch is the fan switch. It usually has settings of ON and AUTO. The fan switch may be in either position when using the furnace. If the fan switch is set to ON, the main blower will run continuously.

H27.7

4.7 TERMINATIONS

The combustion air and exhaust terminals should be inspected occasionally to ensure that they are free of obstructions and debris. If screens were used in either terminal, ensure that they are free of debris, corrosion, or anything preventing the free flow of air.

H27.8

5.0 HOMEOWNER'S REFERENCE

HOMEOWNER'S REFERENCE TABLE
Model No.
Serial No. *(serial number located on bottom of inside door)*
Date Installed
Contractor
Contact
Address
Postal Code/Zip Code
Telephone No.
After Hours No.
If different from Installation Contractor:
Service Tech.
Telephone No.
After Hours No.
Fuel Supplier:
Gas Supplier
Contact
Telephone No.
After Hours No.

H28.0

NAPOLEON CELEBRATING OVER 40 YEARS OF HOME COMFORT PRODUCTS

7200, Route Transcanadienne, Montréal, Québec H4T 1A3
24 Napoleon Road, Barrie, Ontario, Canada L4M 0G8
214 Bayview Drive, Barrie, Ontario, Canada L4N 4Y8
103 Miller Drive, Crittenden, Kentucky, USA 41030

Phone: 1-866-820-8686
napoleon.com