This Owner's Manual is provided and hosted by Appliance Factory Parts.

Appliance Factory Parts
Experts in BBQ, Humidifier, & Appliance Parts
1-800-955-7075

Breezair CW-6S Owner's Manual

Shop genuine replacement parts for Breezair CW-6S

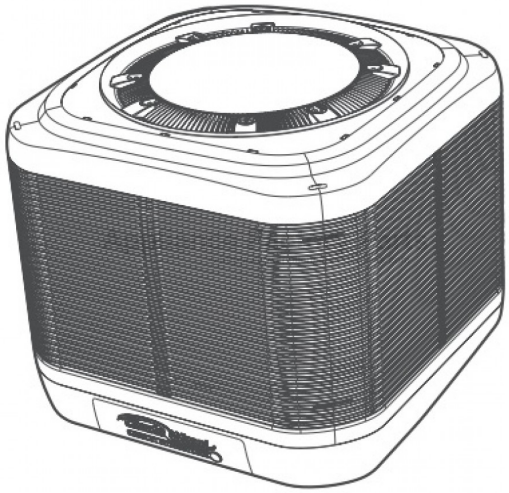

Find Your Breezair Evaporative Cooler Parts - Select From 59 Models

-------- Manual continues below --------

SEELEY INTERNATIONAL

INSTALLATION MANUAL

CW-6S Microcore Indirect Evaporative Cooler

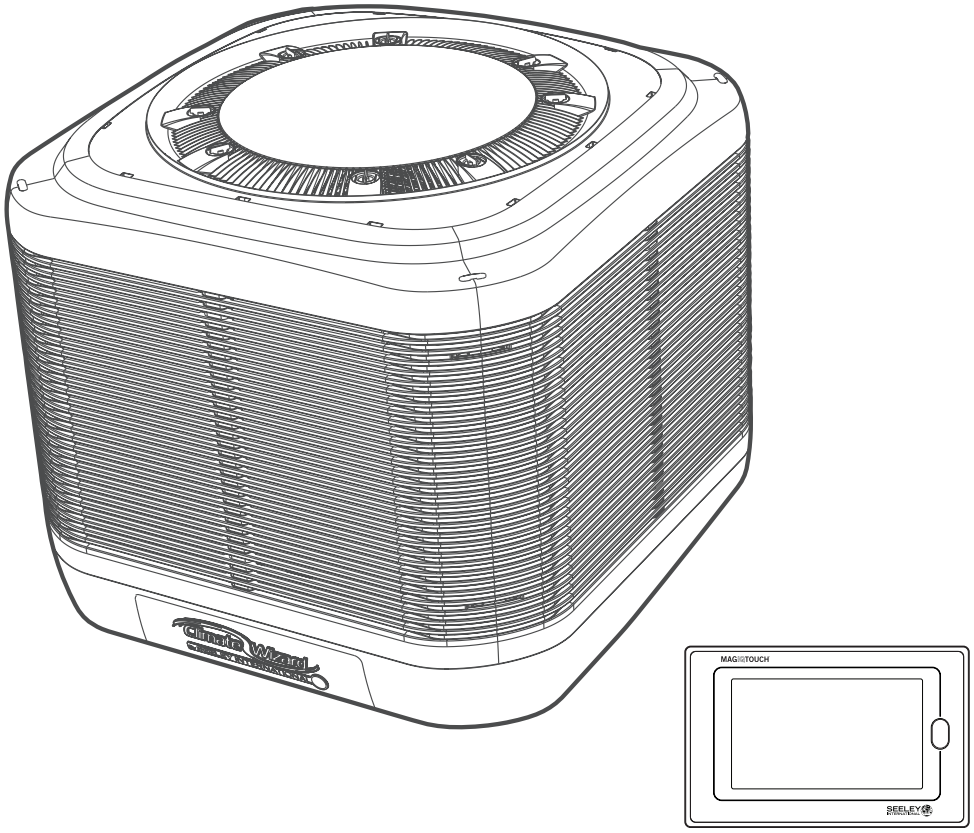

Climate Wizard® By SEELEY INTERNATIONAL

Original English Instructions

TABLE OF CONTENTS

IMPORTANT SAFETY INSTRUCTIONS
- Read And Save These Instructions For Future Reference. 2
- Warning - To Reduce The Risk Of Fire, Electric Shock, Or Injury To Persons, Observe The Following: 2
- For Australian Bushfire Prone Areas 2
- Employer And Employee Responsibilities 2
- Installer And Maintenance Contractors - Risk Assessment 2
- Some Points To Consider 2
- Other Important Requirements 2

COOLER VIEWS **3**
EXPLODED VIEW **4**
COOLER CONTENTS **6**
COOLER INSTALLATION COMPONENTS **6**
INSTALLATION
- On Arrival To Site 7
- Cooler Method Of Installation 7
- Assessment Of Roof Structure 7
- Moving The Cooler 8
- Access For Servicing And Maintenance 8
- Cooler Location 8
- Install The Heat/Cool Duct Switch 9
- MagIQtouch Wall Controller 10
- Combined Cooler And Heater With No Zones 10
- Combined Cooler And Heater With A Common Zone And Up To 4 Zones 11
- Combined Cooler And Heater With A Common Zone And Up To 10 Zones 12
- Dropper Details 13
- Preparing The Dropper And Transition 13
- Mounting The Dropper Assembly 14
- Flashing The Dropper 15
- Preliminary Cable Installation 15
- Weatherseal 16
- Installing The Cooler 16
- Lifting The Cooler 16
- Crane Installation 17

ELECTRICAL REQUIREMENTS
- Control Module Wiring Diagram 19
- Field Wiring Diagram 19

WATER REQUIREMENTS **19**
INSTALLING THE DRAIN VALVE **20**
CONNECTION TO MAINS WATER **20**
WATER HAMMER **20**
MAINS CABLE CONNECTION **21**
MAINS AND COMMUNICATION CABLE PATH **21**
WALL CONTROL INSTALLATION
- MagIQtouch Controller 22
- Control System 22
- Locating The Wall Control 22
- Mounting The MagIQtouch Controller 22

CONTROL SCHEMES
- Connecting The MagIQtouch / MagIQcool Controller 25
- MagIQtouch Controller Operation 25
- Building Management System (BMS) Interface (optional) 25

FAULT CODES INDICATED BY LED's ON THE COOLER ELECTRONICS MODULE **26**
COMMISSIONING COMPLETION CHECKLIST **27**
ADJUSTING COOLER SETTINGS **28**
TROUBLE SHOOTING **29**
APPENDICES
- Appendix – A Generic Structurally Engineered Roof Mounting Schemes: 30
- Appendix – B 'Piece By Piece' Installation 37

NOTES **45**

WARNING! Failure to install and commission the product in compliance with these instructions, or failure to do the job properly and competently, may void the customer's warranty. Further, it could expose the Installer and/or the Retailer to serious liability.

IMPORTANT SAFETY INSTRUCTIONS

READ AND SAVE THESE INSTRUCTIONS FOR FUTURE REFERENCE.

Means for all pole disconnection must be incorporated in the fixed wiring in accordance with the wiring rules.

If the supply cord is damaged, it must be replaced by the manufacturer, its service agent or similarly qualified persons in order to avoid a hazard.

The following specifications for the cooler water supply are required:
Min Water Pressure 100kPa (15psi)
Max Water Pressure 800kPa (115psi)
New hose sets supplied with the appliance are to be used and old hose-sets should not be re-used.

To fix the cooler to its support:-

- screw the transition to the dropper
- level the dropper and screw to roof
- fit 4 x T-washers into the transition
- place cooler onto dropper and secure with the 12 x 12g screws supplied

Refer to installation section for details

WARNING - TO REDUCE THE RISK OF FIRE, ELECTRIC SHOCK, OR INJURY TO PERSONS, OBSERVE THE FOLLOWING:

a) Installation work and electrical wiring must be done by qualified person(s) in accordance with all applicable codes and standards, including fire-rated construction.

b) When cutting or drilling into wall or ceiling, do not damage electrical wiring and other hidden utilities.

c) Ducted fans must always be vented to the outdoors

d) Do Not Use This Fan With Any Solid-State Speed Control Device.

FOR AUSTRALIAN BUSHFIRE PRONE AREAS

WARNING If an evaporative cooler is installed in a BAL-12.5 to 29 area the evaporative cooler dropper duct and flashings shall be adequately sealed at the roof to prevent gaps greater than 3mm. The dropper duct and flashings shall be non-combustible.

WARNING: This cooler is NOT APPROVED for installation in any bushfire zoned area/property (BAL-12.5 to BAL-FZ).

EMPLOYER AND EMPLOYEE RESPONSIBILITIES

The installation and maintenance of evaporative coolers at height has the potential to create Occupational Health and Safety issues for those involved. Installers are advised to ensure they are familiar with the relevant State and Federal legislation, such as Acts, Regulations, approved Codes of Practice and Australian Standards, which offer practical guidance on these health and safety issues. Compliance with these regulations will require appropriate work practices, equipment, training and qualifications of workers.

Seeley International provides the following information as a guide to contractors and employees to assist in minimising risk whilst working at height.

INSTALLER AND MAINTENANCE CONTRACTORS - RISK ASSESSMENT

A risk assessment of all hazardous tasks is required under legislation. A risk assessment is an essential element that should be conducted before the commencement of work, to identify and eliminate the risk of falls or to minimise these risks by implementing control measures. There is no need for this to be a complicated process, it just is a matter of looking at the job to be done and considering what action(s) are necessary so the person doing the job does not injure themselves.

This should be considered in terms of:

- What are the chances of an incident happening?
- What could the possible consequence be?
- What can you do to reduce, or better still, completely get rid of the risk?

SOME POINTS TO CONSIDER

- What is the best and safest access to the roof and working areas?
- If a worker is alone, who knows they are there and if they get into difficulty, how can they summon help? (Call someone on the ground? Mobile phone? etc.)
- What condition is the roof in? Should the trusses, underside or surface be checked?
- Does the worker have appropriate foot wear? (Flat sole jogger type is advisable.)
- Are all power cables / extension leads safe and appropriately rated?
- Are all ladders, tools and equipment suitable in good condition?
- Where ladders are to be used, is there a firm, stable base for them to stand on? Can they be tied or secured in some way at the top? Is the top of the ladder clear of electricity supply cables?
- Is there a roof anchor to attach a harness and lanyard to? If so, instruction should be issued for the use of an approved harness or only suitably trained people used.
- Are all tools and materials being used, prevented from slipping and falling onto a person at ground level? Is the area below the work area suitably protected to prevent persons walking in this area?
- Does the work schedule take into account weather conditions, allowing for work to be suspended in high winds, thunder storms/lightning or other types of weather giving wet, slippery surfaces?
- Is there an on-going safety check system of harnesses, ropes, ladders and access/lifting equipment and where they exist on roofs, anchor points before the commencement of work?
- Is there a system which prevents employees from working on roofs if they are unwell or under the influence of drugs or alcohol?
- Are there any special conditions to consider i.e. excessive roof pitch, limited ground area, fragile roof, electrical power lines?

OTHER IMPORTANT REQUIREMENTS

- Never force parts to fit because all parts are designed to fit together easily without undue force.
- Never drill holes in the tank of the cooler.
- Check the proposed cooler location, to ensure that it is structurally capable of supporting the weight of the cooler, or provide an adequate alternate load bearing structure.
- Ensure the installation complies with all local and national regulations with regards to electrical, plumbing and bushfire construction requirements.

COOLER VIEWS

TOP

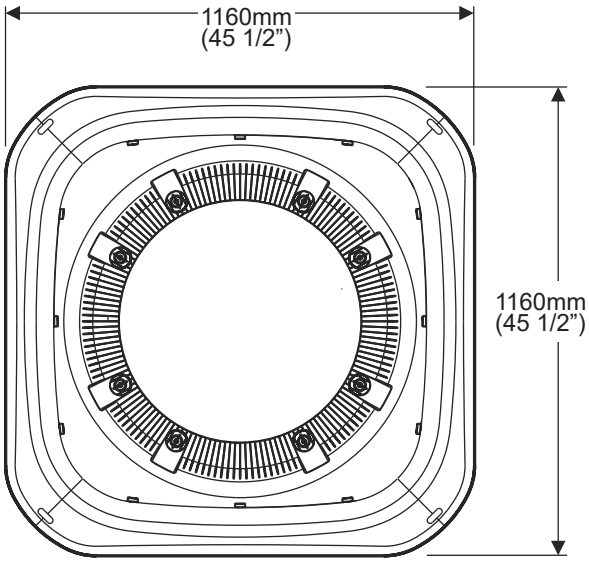

ILL2677-A

ISO

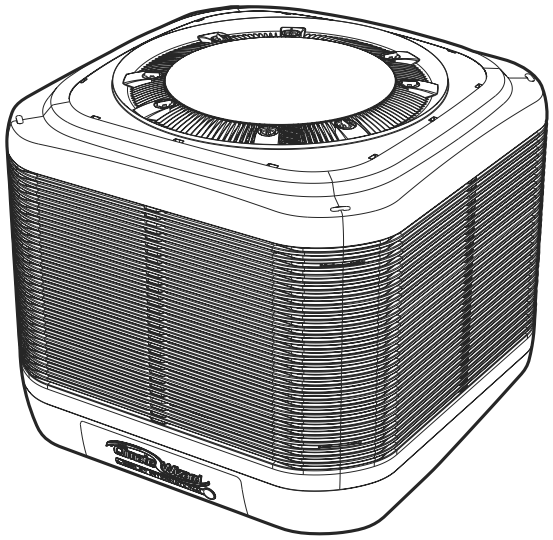

ILL2675-A

FRONT

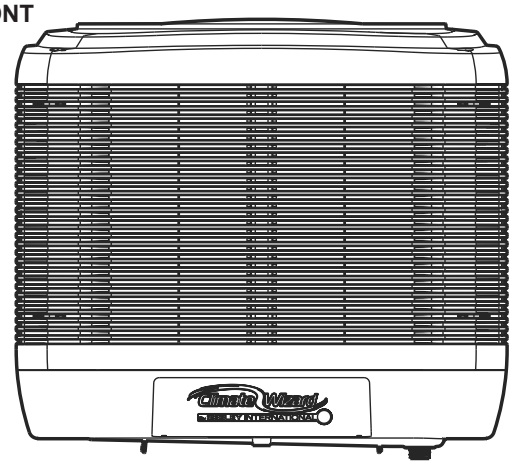

ILL2680-A

SIDE

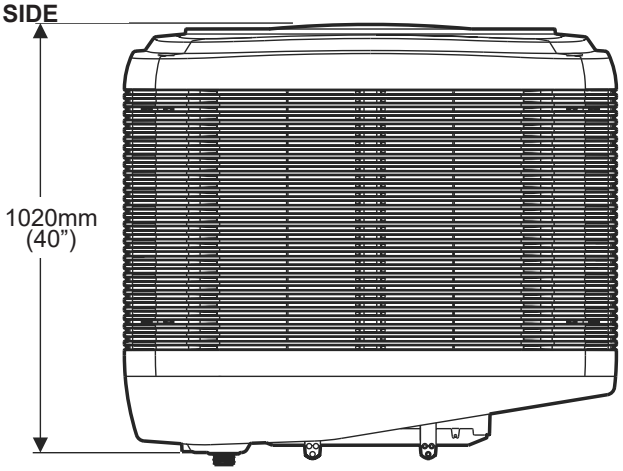

ILL2679-A

SERVICES

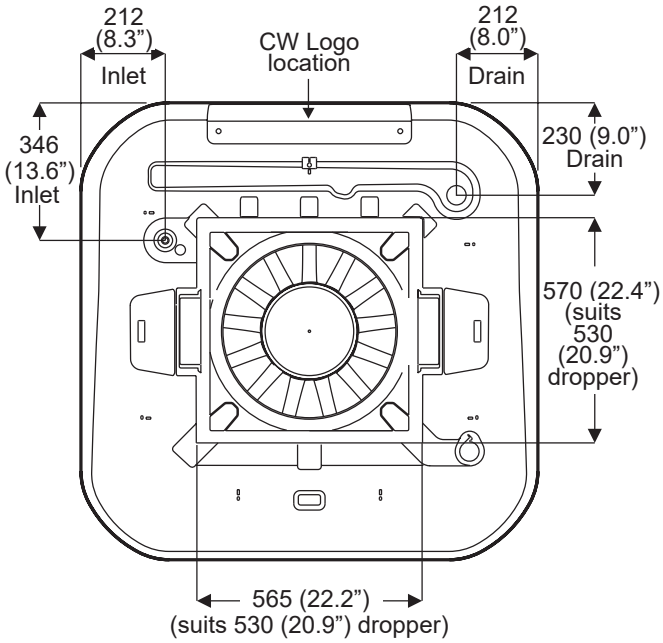

ILL2678-A

UNDERSIDE

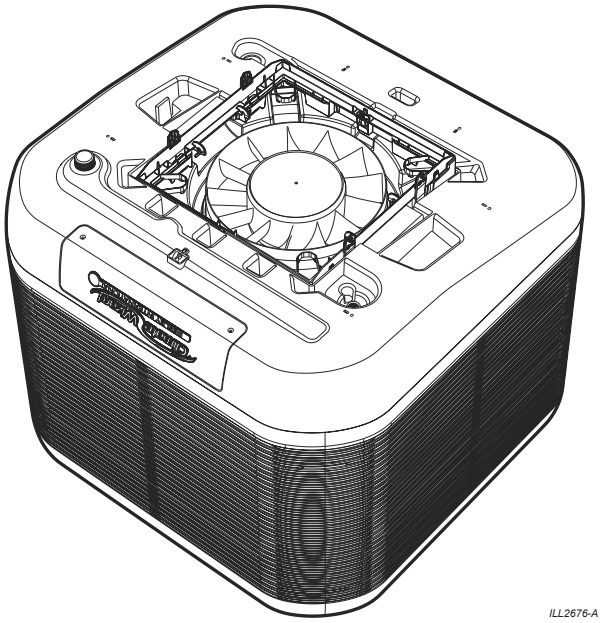

ILL2676-A

Dimensions are in mm (inches in brackets).

EXPLODED VIEW

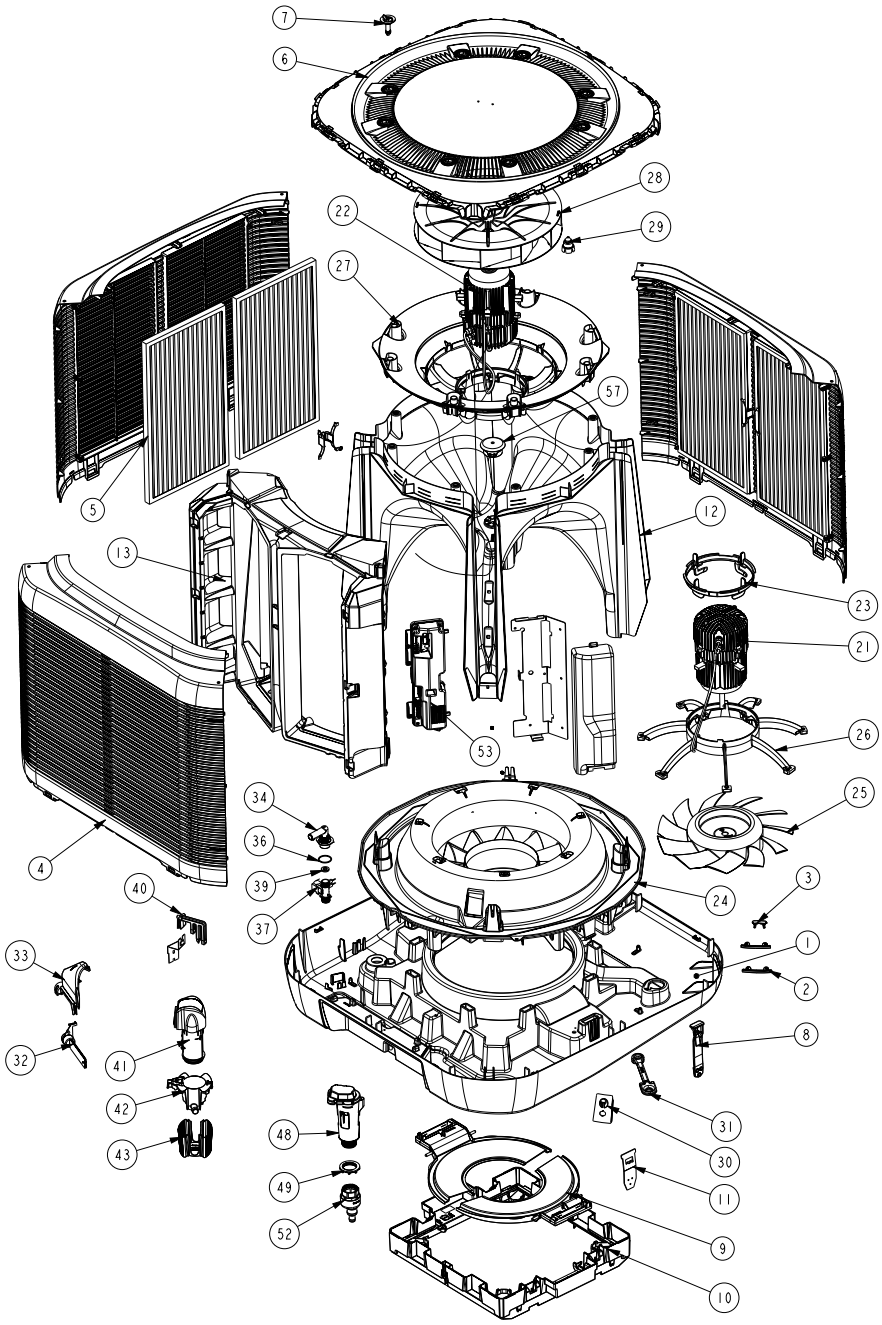

INDEX	PART No.	DESCRIPTION	QTY
1	562162	TANK MICROCORE GREY	1
2	562391	CLIP SIDE PANEL CW-6S	8
3	562438	CLIP SIDE PANEL TOP CW-6S (4)	4
4	562179	PANEL SIDE MICROCORE GREY	1
5	855879	FILTER CARTRIDGE 25”x14”x1”	8
6	562063	LID GRILLE EXHAUST MICROCORE	1
7	562223	LID SCREW GRILLE MICROCORE	8
9	562322	SUPPLY DRAUGHT FLAP	2
10	122328	DROPPER TRANSITION ASSY CW-6S	1
11	639381	T-WASHER CW-6S	4
12	562032	PLENUM INNER CW-6S	1
13	834660	PLENUM OUTER MICROCORE	1
21	122175	MOTOR ASSY 1PH INVERTER DRIVE	1
22	122182	MOTOR ASSY 1PH INVERTER DRIVE	1
23	562308	RING MOTOR LOCK MICROCORE	1
24	562046	VENTURI SUPPLY MICROCORE	1
25	562094	FAN SUPPLY MICROCORE	1
26	562186	MOUNT MOTOR SUPPLY MICROCORE	1
27	562056	VENTURI EXHAUST MICROCORE	1

INDEX	PART No.	DESCRIPTION	QTY
28	122342	FAN EXHAUST CW-6S	1
29	562476	CAP FAN CW-6S (2)	
30	863832	PLUG VENTURI MICROCORE	1
31	863665	STRAPS RETENTION MANIFOLD	1
32	866512	CHLORINATOR LARGE ASSY	1
33	560294	COVER CHLORINATOR MOUNT (2)	1
34	560287	FITTING ELBOW AIR-BREAK CW-6S	16
36	804415L	O’RING BS128 38ID*2.6 N70 M51	1
37	865607	SOLENOID VALVE 12V DC	1
39	815978	WASHER RUBBER LCQ KITS	1
40	833835	PROBE WATER 3PIN 1.76M	1
41	116130	PUMP 230/50 TWIN OUTLET 1500	2
42	562339	OUTLET TWIN TORNADO PUMP	1 per pump
43	562346	STRAINER TWIN OUTLET TORNADO	
48	122311	DRAIN VALVE ASSY CW-6S 12V MFG	1
49	535401	^NUT 1.5” BSP	1
53	117928	CONTROL ASSY CW-6S	1
57	935898	>PUCK/CAP/UMBREL PRESSURE	1

ILL2982-A

EXPLODED VIEW

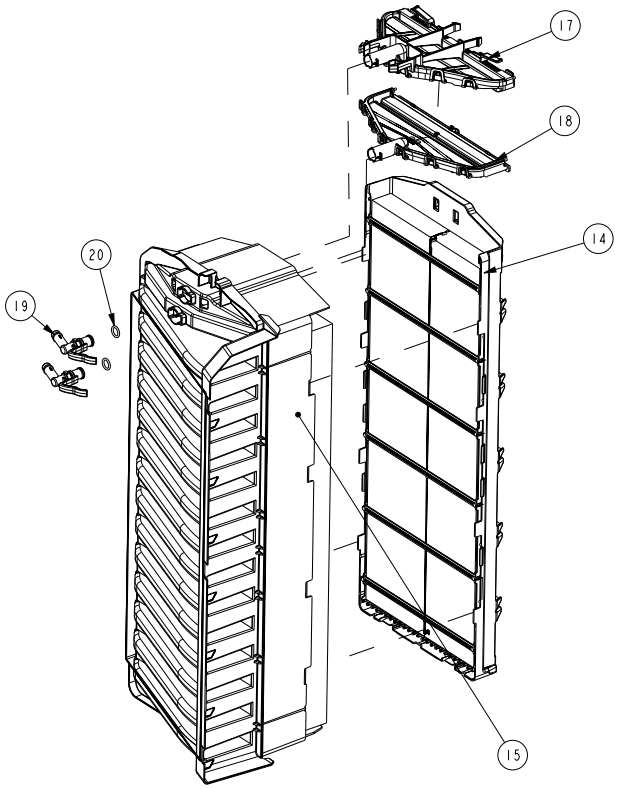

ILL2982-A

INDEX	PART No.	DESCRIPTION	QTY
14	117935	MICROCORE DIRECT ENCAPSULATION	1
15	122151	ENCAPSULATION INDIRECT RIGHT	1
17	122366	SPREADER SUB ASSY DIRECT CW-6S	1
18	122144	SPREADER SUB ASSY INDIRECT	1
19	562124	SPREADER ELBOW CLIP MICROCORE	1
20	863208	O RING BS112	2

COOLER CONTENTS

COOLER INSTALLATION COMPONENTS

Item	Part No.	Illustration	Description	QTY
1	094298	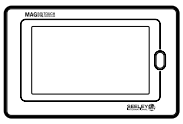	MagIQtouch Controller Kit	1
2	833880	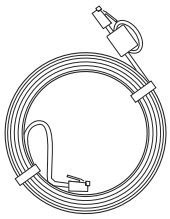	Control Cable 20m (65")	1
3	859747		Instruction - Installation	1
4	859748		Instruction - Operation, Maintenance	1
5	850764	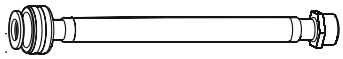	Flexible Water Inlet Hose	1
6	583020	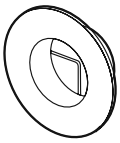	Grommet for Dropper	1
7	639381	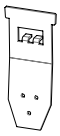	T-Washer	4
8	101713		Adapter Drain Fitting Assembly	1
9	639391	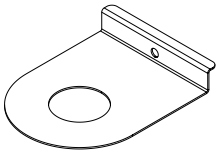	Solenoid Cover	1
10	122328	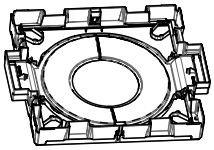	Dropper Transition Assembly	1
11	875392		Dropper TEK Screw Fasteners Screw TEK, Hex, Steel, 12 Gauge, 30-35mm x 14TPI, (20 for dropper + 2 for solenoid cover)	22

INSTALLATION

ON ARRIVAL TO SITE

The CW-6S cooler will be delivered on a dedicated pallet and will be wrapped in plastic film with timber and foam supporting members.

The cooler will be accompanied by a packout kit box containing control items and other components that are required for installation.

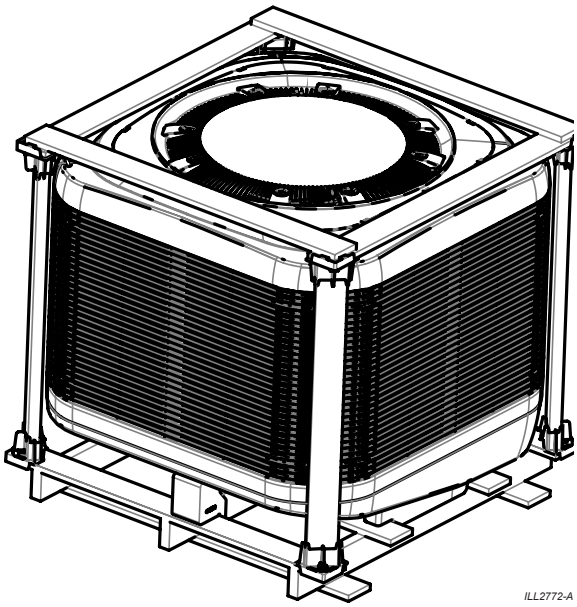

ILL2772-A

To correctly unpackage the cooler, follow the instructions below:

1. Inspect for transport damage prior to unpacking.
2. Remove the plastic film, white foam packing blocks and pallet strapping. Dispose of responsibly.
3. Remove the top horizontal timber support members and vertical timber support members. Dispose of responsibly.
4. Leave the base pallet and foam supporting blocks in position in 4 places, as shown. These are required for lifting.
5. Remove pad frames to access the BMS Module packed inside the cooler.

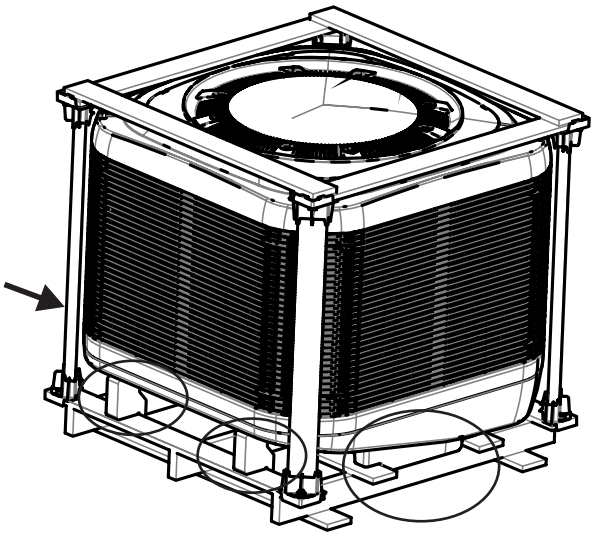

Note: 4th Foam Block position obscured in this view

ILL2773-A

COOLER METHOD OF INSTALLATION

There are two possible methods of installation for the CW-6S cooler:

1. **Installation via crane (preferred)** – cooler is lifted from its pallet on the ground and slung onto the dropper.
2. **Piece by piece assembly** – cooler is disassembled on the ground and reassembled on the dropper.

The ideal method of installation will be specific to each assignment. To determine which method is best suited to your installation, be sure to consider regulations, location, access points, potential obstacles and safety.

Discuss the possible options with the customer.

ASSESSMENT OF ROOF STRUCTURE

THE CW-6S COOLER REQUIRES AN ADEQUATE ROOF STRUCTURE TO BEAR THE LOAD OF ITS OPERATING WEIGHT. IT IS LIKELY THAT MOST RESIDENTIAL STRUCTURES WILL REQUIRE REINFORCEMENT.

Engineering designs of roofs, including the supporting structure and cladding, should take into account whether the work practices necessary to carry out the installation and maintenance of the roof can be carried out safely.

Model	Shipping Weight	Operating Weight
CW-6S	175 kg (386 lb)	240 kg (529 lb)

It is the installers responsibility to verify the integrity of the roof structure as well as determine and implement an adequate load bearing structure to which the dropper and cooler is fixed. The roof structure in question must be in good condition (i.e. no worn members or pre-existing damage) and compliant with one of the structurally engineered roof mounting schemes provided (Refer below).

If these generic schemes are not applicable to the customer installation, it is the installer's responsibility to seek the services of a structural engineer or certified builder to ensure that the installation is adequate and complies with local and national building codes. Installation on inadequate structures will void the warranty and could result in death or serious injury. If the installer has any doubt in regards to the structural integrity or condition of the customer installation, then a structural engineer or building certifier must be consulted.

The following generic structurally engineered roof mounting schemes have been provided (Refer to Appendix A):

1. Pre-manufactured roof truss, interior walls (non-load-bearing):
   a. 600mm nominal truss spacing
   b. 1200mm nominal truss spacing
2. Interior load-bearing walls

INSTALLATION

MOVING THE COOLER

The CW-6S cooler can be moved either by fork-truck or pallet-truck whilst it is resting on its dedicated pallet. Do not drag or lift the cooler unless it is on its dedicated pallet.

If the cooler has been unpackaged as per the instructions in the 'On Arrival to Site' section, then ensure that the foam supporting blocks are in place and transport carefully.

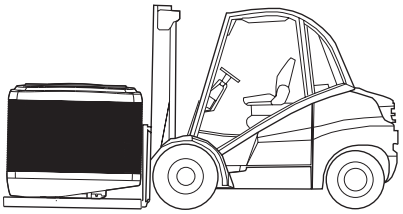

ILL2970-A

ACCESS FOR SERVICING AND MAINTENANCE

The cooler should be installed in a position that allows adequate access for installation, and future maintenance and servicing activities. This should comply with installation guidelines and any local, State and National regulations.

Consider the following for installation location:-

- Which has clear access to and around the cooler
- Which is clear of fixtures in line with below clearances
- Which is clear of fall edges (> 3m away)
- Which is structurally capable of supporting the weight of the cooler and service technicians

Required clearances around the cooler for future maintenance and servicing are shown adjacent.

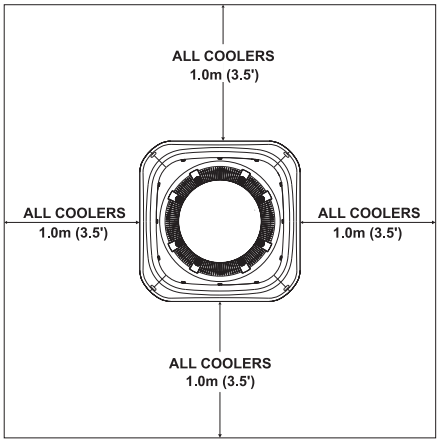

ILL2987-A

Extra service or warranty charges may apply for the cost of any equipment or additional labour involved in accessing the cooler if these guidelines are not met.

COOLER LOCATION

Check proposed cooler location to ensure it is structurally capable of supporting the weight of the cooler. If the roof is structurally inadequate, provide an alternate load bearing structure.

The ideal location for the cooler is in a central position on the roof (away from sleeping areas and where people spend most of their time) so that the duct runs are of approximately the same length. Carefully consider neighbouring residences and noise levels when locating the cooler, if necessary talk to the customer and the neighbour before carrying out the installation.

Always locate the cooler where it will receive adequate fresh air and not in a recess where it may be starved for air or where the air is polluted.

Ensure location is a minimum of:

- 3m (10') from a solid fuel heater flue,
- 1.5m (5') from a gas flue,
- 1.0m (3.5') away from adjacent solar panels or similar roof mounted fixtures,
- 5m (17') from a sewer vent, and
- 600mm (2') from a wall.

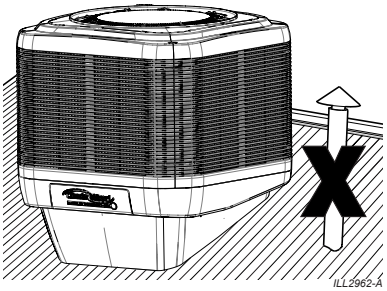

ILL2962-A

- The cooler must be mounted at least 3m (10') (preferably 5m (17')) away from any TV antenna or antenna cables. Make sure the cooler is not between the antenna and the transmission tower that is providing the television signal to the home.

Allow adequate access to and around the cooler for maintenance. Provision must be made for access to electricity, water supplies and drains.

Note! Do you need to discuss the installation of items like safety anchor points with the customer?

INSTALLATION

INSTALL THE HEAT/COOL DUCT SWITCH

OPERATION

The Climate Wizard CW-6S is available as a Stand Alone cooling solution or as a Dual System heating and cooling package (CW-6S Dual System) when combined with a Braemar Ducted Gas heater. If installing a Dual System, the Heat Cool Duct Switch (HCDS) is required to allow the cooler and heater to share the same set of ducts and room outlets.

The Heat/Cool Duct Switch (HCDS) interacts with the MagIQtouch Wall Control, the CW-6S Cooler and the Ducted Gas Heater ducting dampers in the Dual System. The HCDS automatically responds to switch the appliance ducting dampers open and closed according to the Wall Control setting. If Heating is selected, the dampers isolate the Cooler from the duct outlets. If Cooling is selected, the dampers isolate the Heater from the duct outlets.

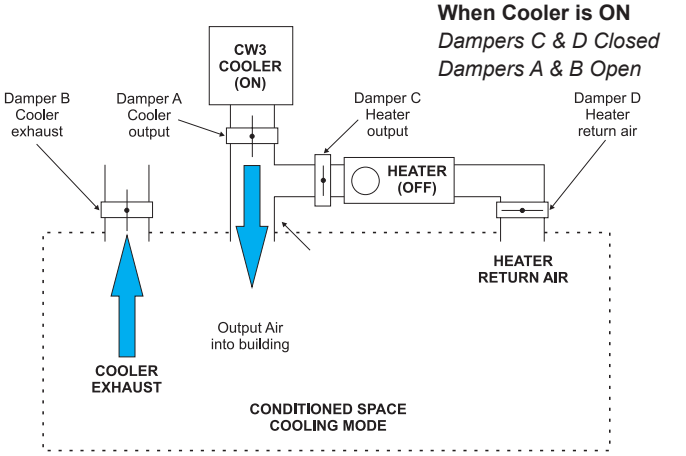

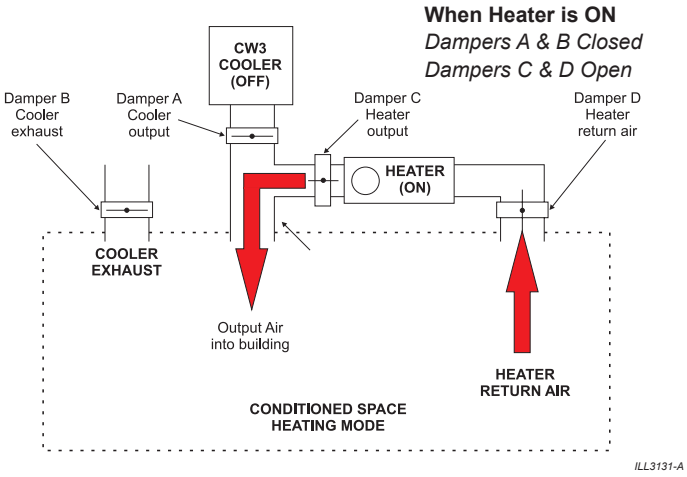

The HCDS can be fitted to any installation using MagIQtouch controls. It has a programmable period that delays the start of the fan motor to allow time for the 24VAC dampers to open and/or for residual heat to dissipate from the ducting.

The Heat/Cool Duct Switch KIT contains;
Control Enclosure Assembly (inc. Power Cable/Plug), 20m Communication lead, Screws Enclosure Mount, Cable Ties.

NOTE: Dampers & damper control cables (24VAC) are not supplied. Use ONLY Belimo LM24A; LM24A-T; or LM24A-90-T damper models.

STEP 1 - ASSEMBLE THE HEAT/COOL SWITCH ENCLOSURE

Open the enclosure and take note of output positions on the circuit board for 24V damper wiring (not supplied).

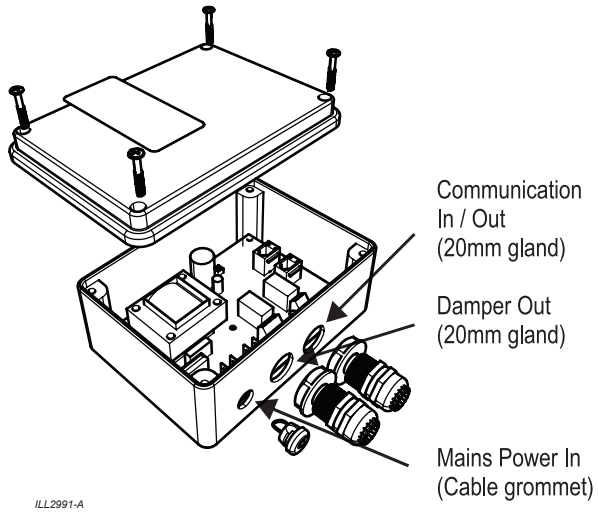

STEP 2 - WIRING CONNECTION

Wire as per schematic diagram.

Mount a mains power supply socket in close proximity to the heater in the roof space as the damper control enclosure requires its own separate 240V/50Hz supply.

IMPORTANT! Do not connect until installation is complete.

Wall Controller cable (20m) must plug into enclosure marked “HEATER”. The 20m Cooler communication cable must plug into the enclosure marked “COOLER”. Both cables are routed through the Communication In/Out cable gland.

Connect damper control cable (not supplied) to the output 24VAC on the circuit board. Ensure the damper cable is restrained using the cable tie provided, then route through the Damper Out cable gland.

Use the supplied screws to attach the damper control inside the roof space either onto the dropper, on a nearby joist or near the heater unit The Heat Cool Duct Switch must be within 20m of the heater unit, but not on top of the unit.

Plug in the Heat/Cool Duct Switch power cable.

INSTALLATION

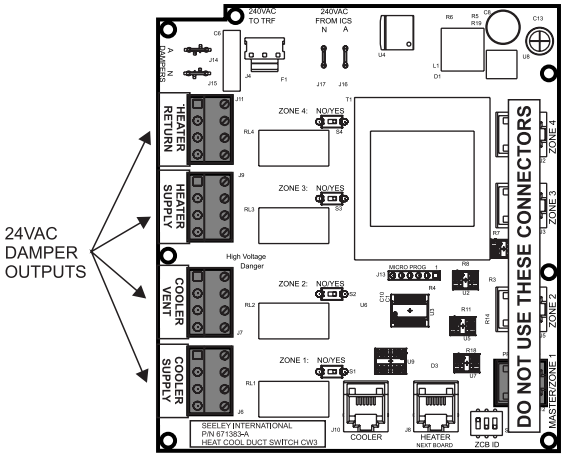

ILL2992-A

STEP 3 - COOLER, HEATER, HEAT COOL DUCT SWITCH AND WALL CONTROL CONNECTION

Connect the 20m communication cables to the cooler control and wall control as per below.

COMBINED COOLER AND HEATER WITH NO ZONES

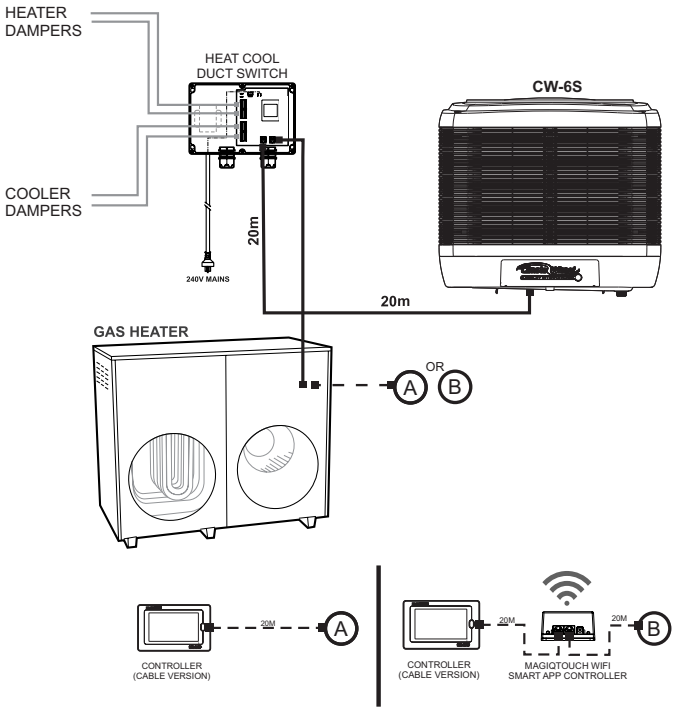

ILL3075-B

Wall Controller Options			
Option	**P/N**	**Description**	**Qty.**
A	**094298**	MagIQtouch Wall Control	1
B	**118369**	MagIQtouch Wi-Fi Smart App Controller & 20m Cable	1

Damper Control output rating: 24VAC 1.6A.
If the supply cord is damaged, it must be replaced by a Seeley service agent or similarly qualified person in order to avoid hazard. Stranded conductors shall not be consolidated by lead-tin soldering where they are subject to contact pressure, i.e on terminal block. Interconnection cable to dampers shall use cable that comply with the requirement of supply cord.
For 24VAC output use H05VV-F, 3 x 1.0mm cable only.

CAUTION: The wall controller CONTROL IN and cooler CONTROL OUT connections are SELV circuits and shall only be connected to the corresponding SELV circuits on the wall controller and heater control.

MAGIQTOUCH WALL CONTROLLER

ILL2785-A

Step 1 - Press 'SETTINGS' menu. If not displayed press 'MORE' to reveal the extra menu items.

ILL1563-A

Step 2 - Select 'COOLER' tab and activate 'DAMPER DELAY MODULE' button. Access code 7378 to activate.

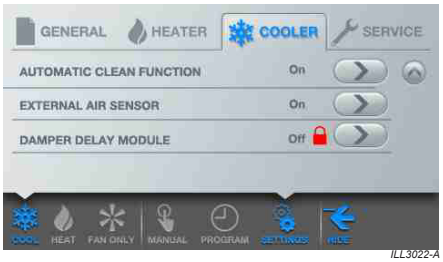

ILL3022-A

Step 3 - Switch Damper Delay function to 'ON' and select time for delay. 'SAVE' and exit when complete.

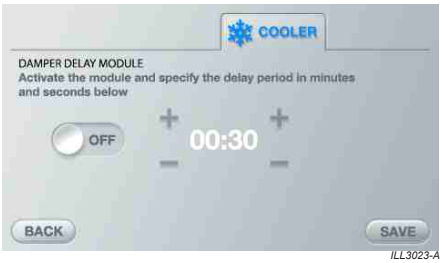

ILL3023-A

INSTALLATION

COMBINED COOLER AND HEATER WITH A COMMON ZONE AND UP TO 4 ZONES

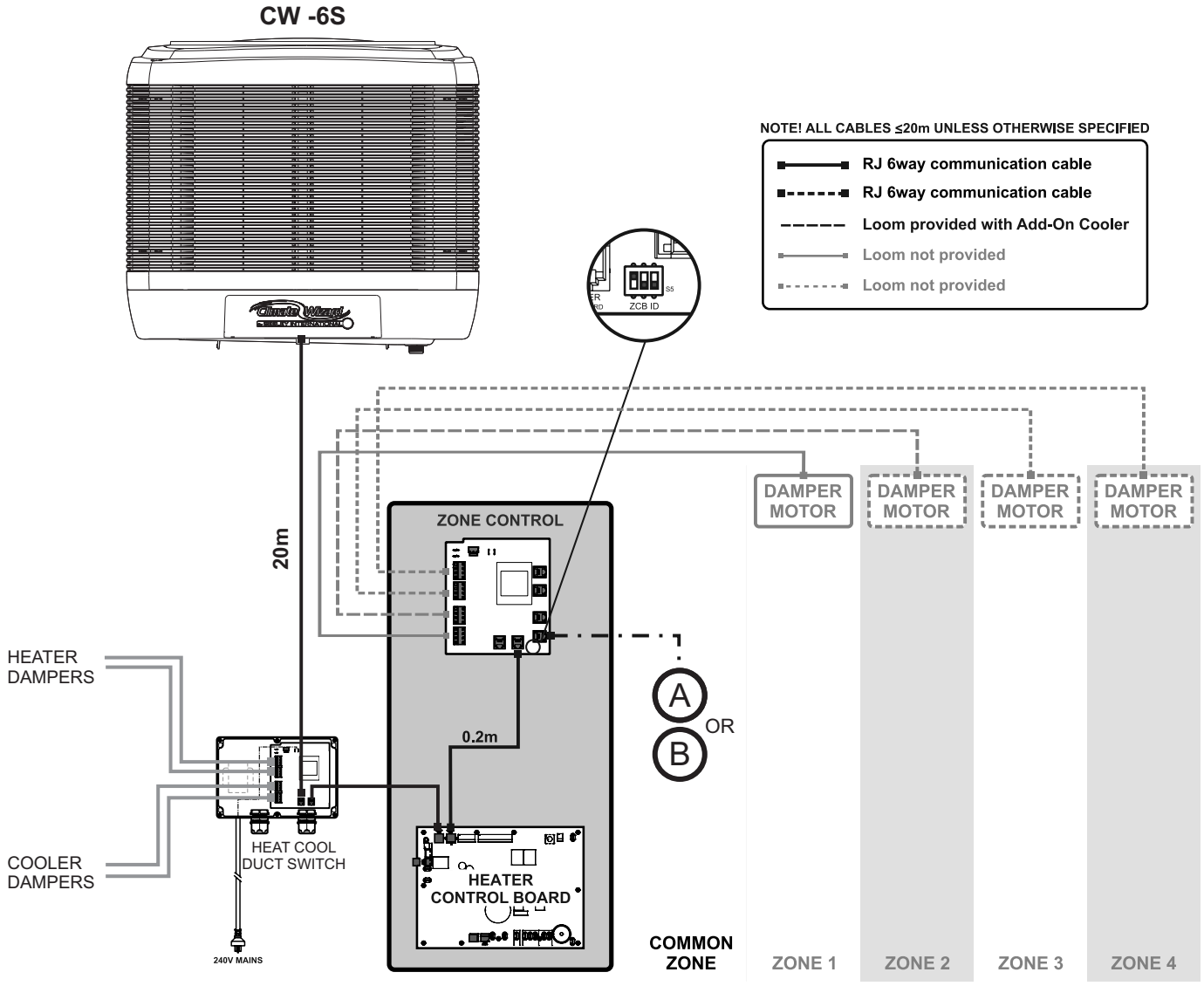

GAS DUCTED HEATER

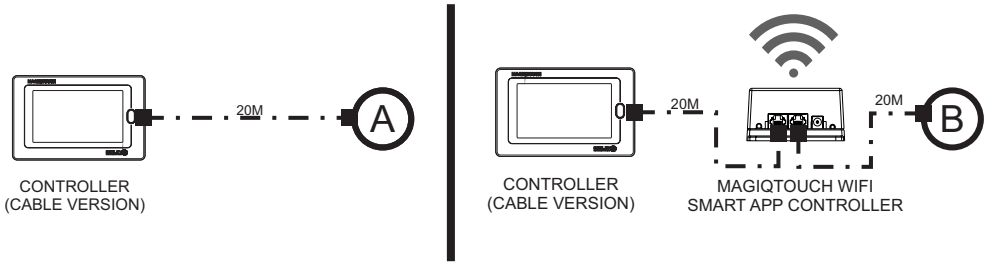

ILL3074-A

Major Appliances:

Appliance	Included With Appliance	Qty.
Gas Ducted Heater	20m Cable	1
Indirect Evaporative CW-6S Cooler	20m Cable	1

Wall Controller Options

Option	P/N	Description	Qty.
A	094298	MagIQtouch Wall Control	1
B	118369	MagIQtouch Wi-Fi Smart App Controller & 20m Cable	1

Additional Kits Required

P/N	Description	Cable Inc.	Qty.
094939	MagIQtouch Zone Control, Board Only (24V)	0.2m	1
094915	MagIQtouch Zone Control, in Enclosure (24V)	20m	2

INSTALLATION

COMBINED COOLER AND HEATER WITH A COMMON ZONE AND UP TO 10 ZONES

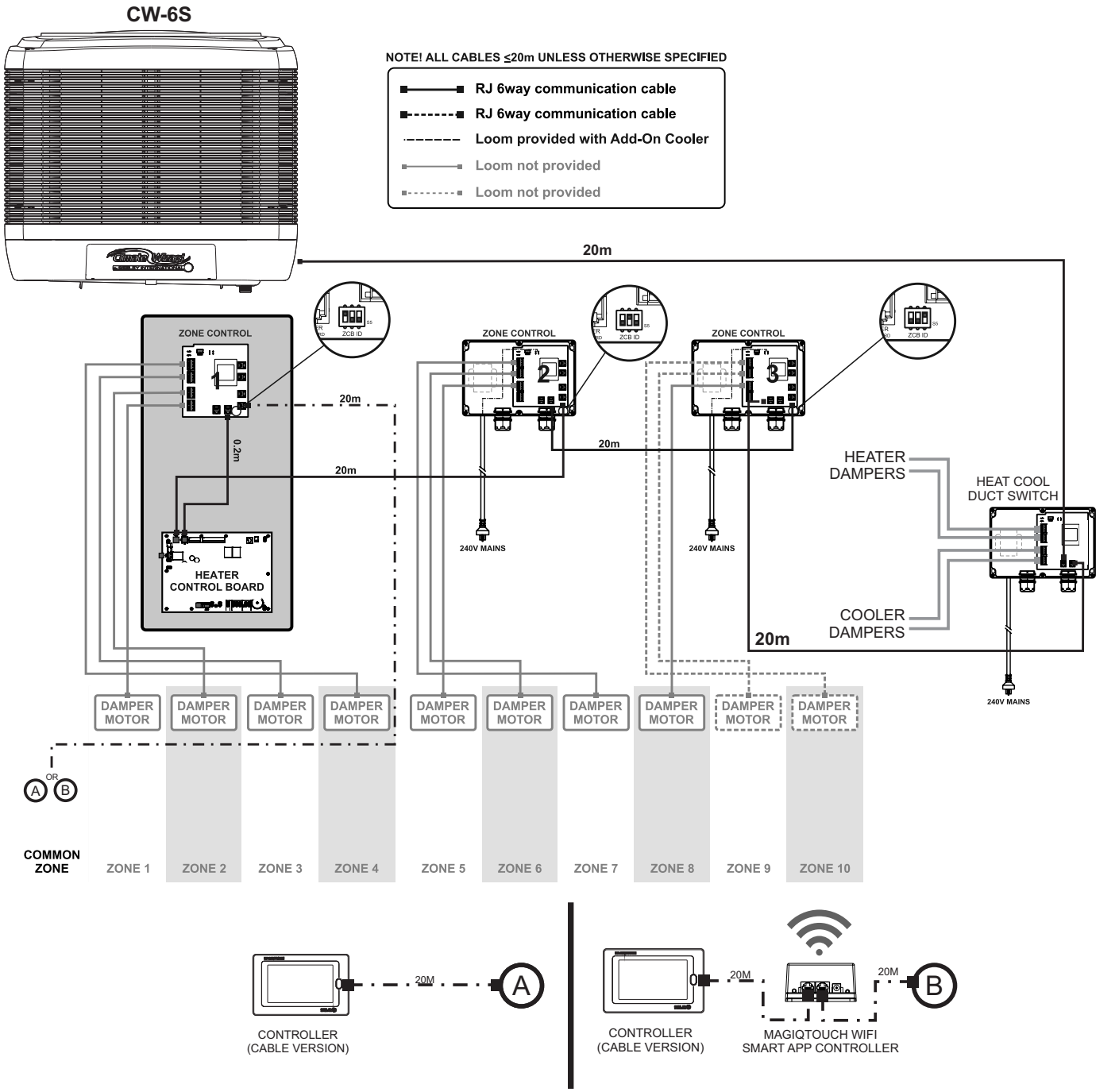

Major Appliances:		
Appliance	**Included With Appliance**	**Qty.**
Gas Ducted Heater	20m Cable	1
Indirect Evaporative CW-6S Cooler	20m Cable	1

Wall Controller Options			
Option	**P/N**	**Description**	**Qty.**
A	**094298**	MagIQtouch Wall Control	1
B	**118369**	MagIQtouch Wi-Fi Smart App Controller & 20m Cable	1

Additional Kits Required			
P/N	**Description**	**Cable Inc.**	**Qty.**
094939	MagIQtouch Zone Control, Board Only (24V)	0.2m	1
094915	MagIQtouch Zone Control, in Enclosure (24V)	20m	2

INSTALLATION

DROPPER DETAILS

Cooler is supported by a 530 x 530mm (20 7/8” x 20 7/8”) dropper with a minimum metal thickness of 1.0mm (20 gauge). The dropper duct must have a raw edge or safe edge at the top. Do not fold in a flange as this may interfere with the transition and/or the Weatherseal

Refer to Appendix B for dropper dimensions and detail.

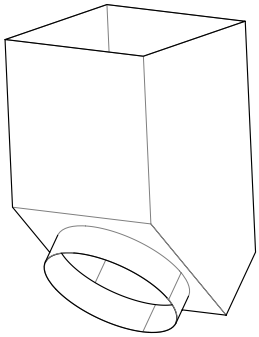

ILL2774-A

PREPARING THE DROPPER AND TRANSITION

The cooler will be accompanied by a separate kit box containing the dropper transition assembly, fittings and all associated fasteners.

Begin by dismantling the dropper transition assembly on the ground. For accessibility purposes, it is best to temporarily remove the Weatherseal as shown.

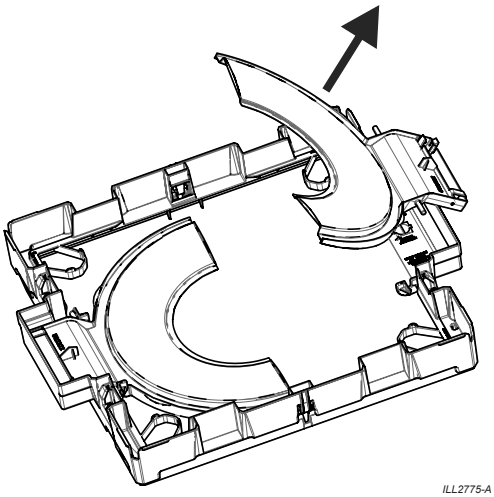

ILL2775-A

Cut a 50mm diameter cable exit hole in the dropper then fit and screw the cable grommet into position. Locate the hole so the cables will not interfere with the operation of the Weatherseal.

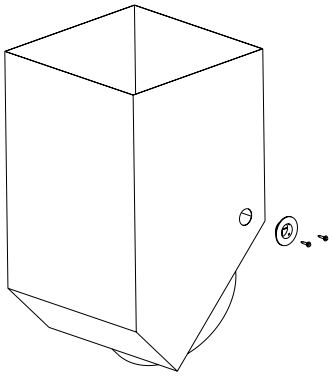

ILL1646-A

Fit the transition onto the dropper as shown. Ensure that it is orientated correctly, as shown by the engraved detail on the transition.

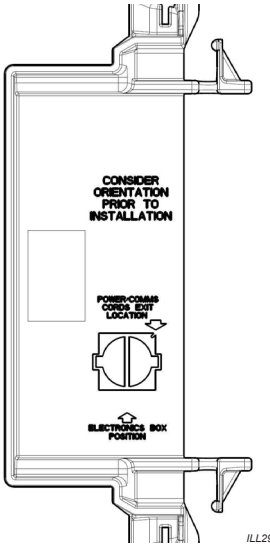

ILL2971-A

Fix the transition to the dropper by drilling 6x of the supplied dropper transition fasteners into the dropper. There are 2x pilot holes on each side and a single hole on the front and rear (centre) of the transition. The following fasteners may be used as a secondary alternative or spare for securing the transition to the dropper:

- Screw TEK, Hex, Steel, 12 Gauge, 30-35mm x 14TPI, Category 3-5 (Depending on local regulations), Neoprene seal.

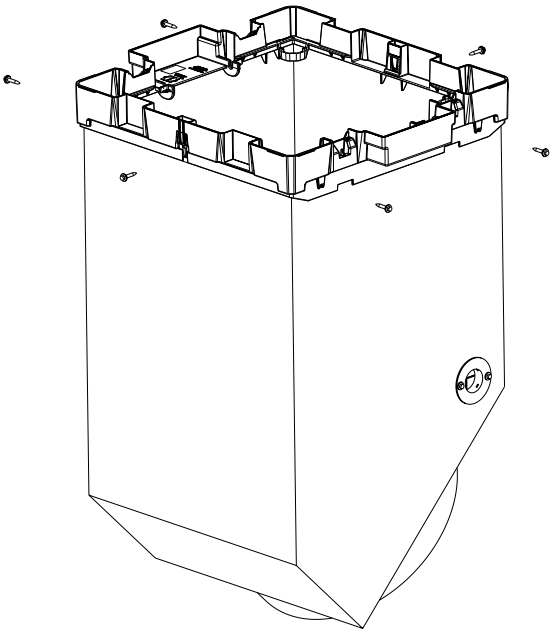

ILL2776-A

Transport the transition and dropper assembly to the roof.

INSTALLATION

MOUNTING THE DROPPER ASSEMBLY

WARNING! The roof must have an adequate load bearing structure that is sufficient to bear the load of the cooler along with any other dead/live loads (such as cladding and personnel etc.) prior to mounting the dropper. Please refer to the 'Assessment of Roof Structure' section. The following instruction assumes an adequate roof structure is in place.

A dropper height template has been provided to accurately set the height of the dropper such that it is ideally positioned for fitment of the sloped tank and accessories pack. The template is a 25mm x 25mm x 3mm piece of steel angle bar with length of 750mm.

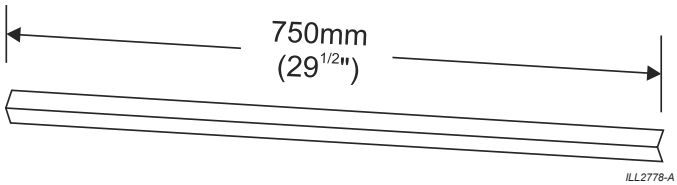

ILL2778-A

The following method of height-setting is only applicable for roof angles between 15 and 30. Roof angles outside this range of angles will need to be manually set for height via another method.

Install back-flashing into the dropper roof opening. Place a thin sheet of rigid material (i.e. flashing, sheet metal, MDF board or similar) onto the rear of the roof opening as shown to stop the height tool from falling into the crevices of the corrugated iron/ tiles and to prevent it making rubbing or scuffing marks on the roof.

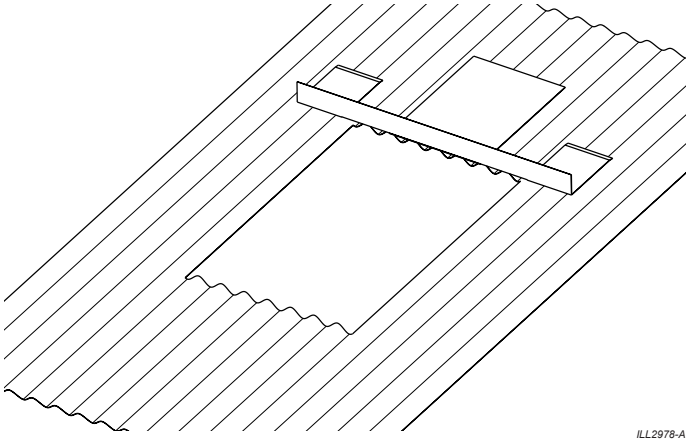

ILL2978-A

Insert the dropper height template into the keyed opening and feed through until it sits flush against the opposite side of the transition as shown. A section of the height template should protrude from the rear of the dropper transition (high roof side).

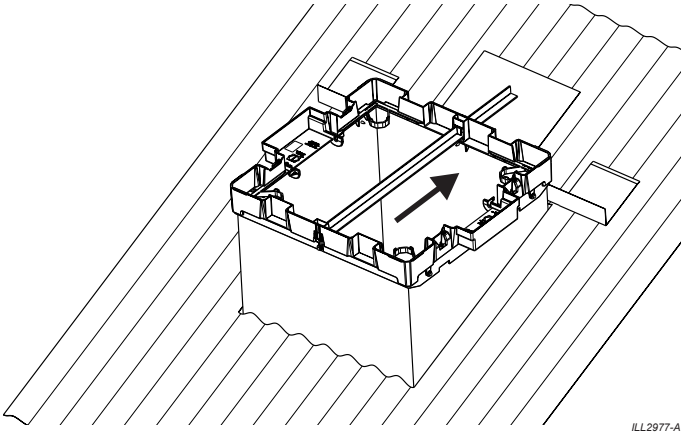

ILL2977-A

Once in place, begin lowering the dropper into the opening in the orientation shown (this may require two personnel). Adjust the position of the dropper such that the height tool rests on the piece of rigid material.

Level the dropper, with a spirit level placed across the top of the transition in both directions.

Once level, secure the dropper to the roof structure with a preliminary fastener (these are not provided - use a regular fastener i.e. a single nail or TEK screw) to assist with holding the dropper in place. Recheck the position of the dropper using the spirit level and the height template. Adjust the preliminary fasteners if necessary.

Once level, begin properly securing the dropper to the roof structure **using roofing screws**. These are not provided.

DO NOT USE THE PROVIDED TEK SCREWS – THESE ARE FOR USE ELSEWHERE.

Insert 5x fasteners per side to be spaced at 100mm intervals in the centre of the timber support members. Refer to Appendix A.

Ensure the top of the dropper is level in both directions.

The installer must ensure the dropper is secured adequately for wind conditions at the site. Additional restraints may be required if the cooler is more than 200mm (8") higher than the roof timbers, or design wind velocity at the site exceeds 43m/s (141fps). In very high wind areas or areas subject to hurricanes/ windstorms, or where the cooler is located more than 8m (26') above the ground, seek advice from a structural engineer.

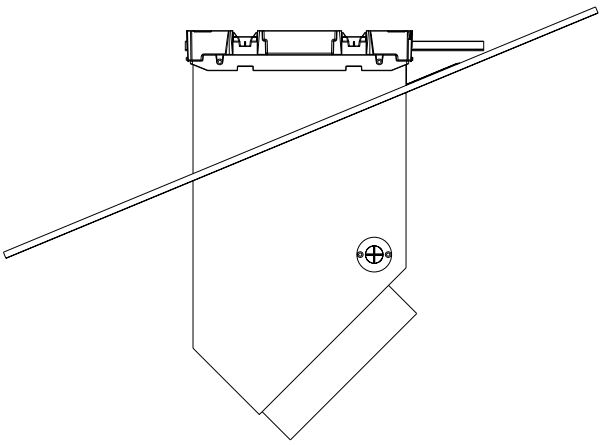

ILL2980-A

Remove the height template by sliding it through the front keyhole of the transition.

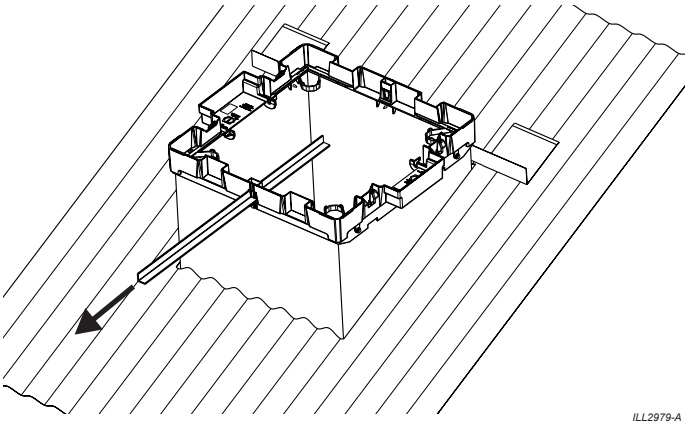

ILL2979-A

INSTALLATION

MOUNTING THE DROPPER ASSEMBLY

Insert the four (4) T-Washers and push them down into the transition piece as shown. The T-Washers should be facing outwards and will be sitting inside the dropper.

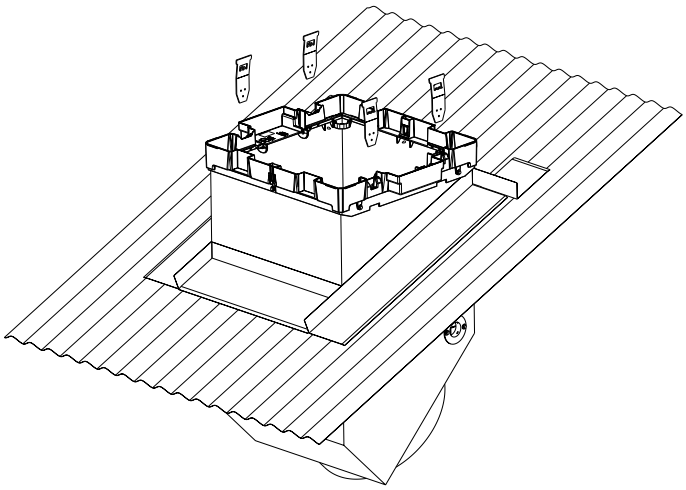

ILL2782-A

IMPORTANT! Each T-Washer has three (3) holes in it. Once in position, **use each of the three holes in the T-Washers to pre-drill three (3) pilot holes outwards through the dropper that are 4mm in diameter. This must be completed before lifting commences.**

DO NOT DRILL ANY OF THE PROVIDED 12g TEK SCREWS INTO THE DROPPER AT THIS STAGE – THESE ARE FOR USE LATER IN THE INSTALLATION.

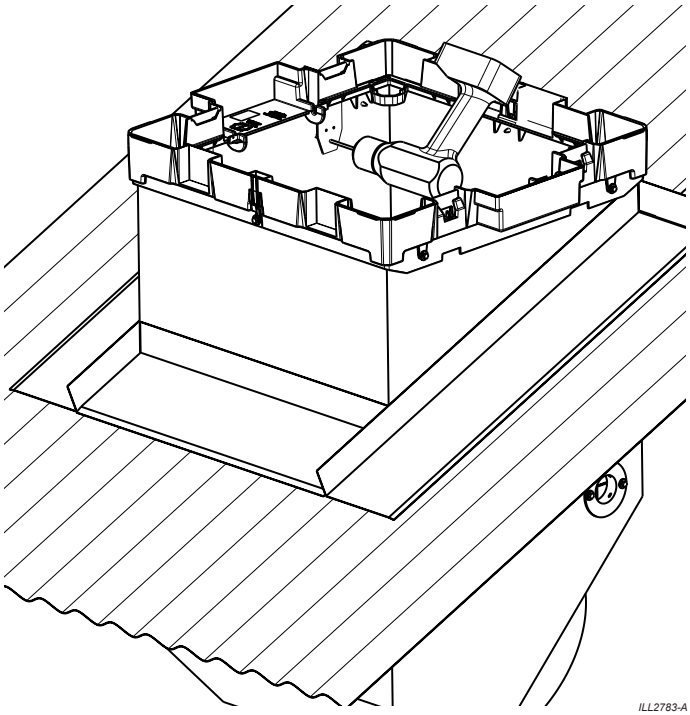

ILL2783-A

FLASHING THE DROPPER

The dropper may now be flashed to the roof. Make sure there is no chance of water entering the roof space.

PRELIMINARY CABLE INSTALLATION

Your installation kit includes a mains power cable and a control cable. It also includes a Heat/Cool Duct Switch module which requires a separate mains socket outlet. This outlet is best located near the socket outlet supplying power to the installed gas heater, as the Heat/Cool Duct Switch needs to be within 20 metres of the heater because of the communications cables.

For Australia Only

The control cable will be routed through the corner recess slot in the transition (as shown below) by the installer.
This cable must be routed through this corner recess prior to the cooler being mounted to the dropper.

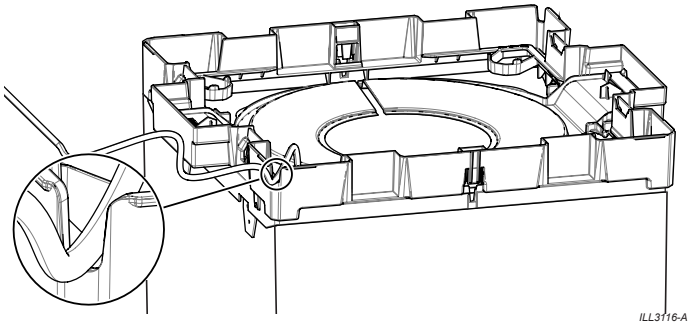

ILL3116-A

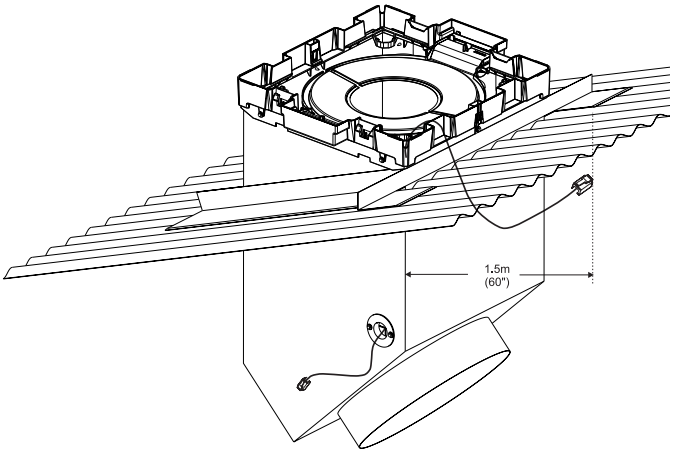

ILL3029-A

Pass the non-taped end of the control cable up into the dropper duct, through the grommet. Pull the cable through and position it in the transition slot where the sticker markers are. Leave excess length of the cables (1.5m or 60” each) hanging out of the roof dropper and not inside the dropper.

The socket end of the mains power cable must also be installed. This is located (and restrained) within the tank of the cooler. Pass the power socket end of the mains cable through the rear access hole (RHS) in the tank and then pull the remainder of unrestrained mains cable through such that it protrudes out of the underside of the tank.

If installing manually, the mains power cable must be installed BEFORE the cooler is secured to the dropper Refer to appendix C (Steps 15-16). If installing by crane, a section of the power cable must be routed through the corner recess slot of the dropper transition whilst the cooler is suspended above the dropper (Refer Step 8 of installation).

To assist this process, bunch the loose power cable up and tape it to an exterior panel on the side of the cooler for easy access during installation. Do this whilst the cooler is on the ground. Refer appendix C, steps 2 to 6.

INSTALLATION

For Rest of the World

Pass the taped end of the wall control cable through the main conduit and leave 1.5m (60”) of cable hanging out of the top of the conduit. A sticker will mark point on the cables. Take the power cable and pass the non-plug end down through the conduit. Be sure to leave at least 1.5m (60”) of power cable length hanging out of the conduit also.

Important! Pass the wall control cable through the conduit first.

Terminate the power cable in a junction box installed nearby. The fixed wiring must be fitted with an isolation switch that breaks the active (hot) and neutral (common) in accordance with local wiring rules. We recommend the junction box be located and installed on the duct.

Do not penetrate the duct near the Weatherseal.

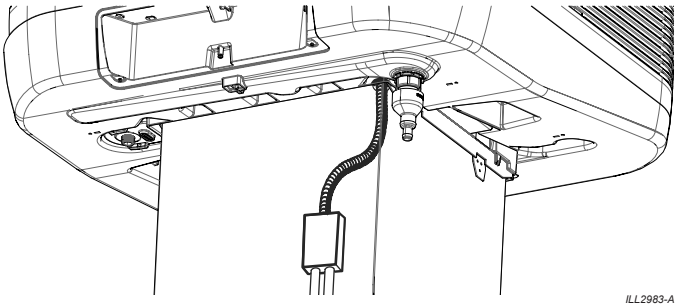

ILL2983-A

Note! The maximum length for the wall control cable to travel alongside the power cable is 10m (33’).

WARNING! Do not let cables, cable ends, or the control box get wet. Position the cables in the dropper so they will be accessible from inside the roof space.

WEATHERSEAL

Reinstall the Weatherseal into the dropper as shown. Ensure they open all the way and do not interfere with the dropper or any screws.

The flaps should move freely through 70º without interference.

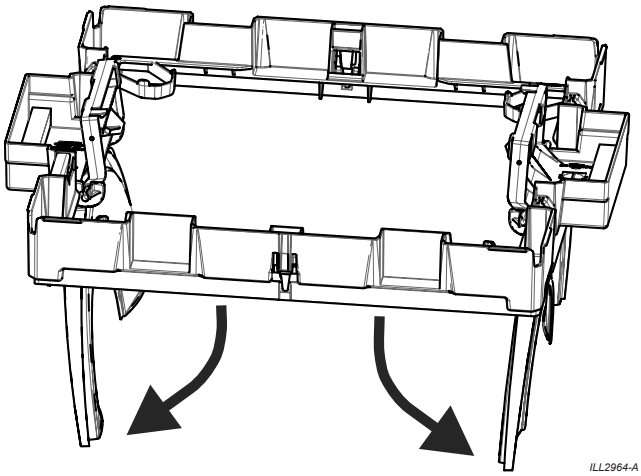

ILL2964-A

Important! There must be no obstructions to the Weatherseal opening fully as it will adversely affect the performance of the cooler.

INSTALLING THE COOLER

The following sections assume that all aforementioned roof structure reinforcement and dropper mounting preparatory work has been completed, transition/dropper holes for the “T” washers have been pre-drilled and communication cable is protruding from the dropper 1.5m (60”).

The ideal method of installation will be specific to each assignment. To determine which method is best suited to your installation, be sure to consider regulations, location, access points, safety and potential obstacles. Discuss with the customer.

LIFTING THE COOLER

The CW-6S cooler may be **lifted by crane via slinging only.**

Slinging points for lifting the cooler have been provided. It is the responsibility of the rigger to determine the appropriate method and equipment for lifting the cooler.

Before the load is lifted:

- Inspect the cooler to make sure it is in good condition (i.e. outer surfaces are undamaged). Ensure all exterior panels and clips are firmly in place. Contact the dealer if any exterior components appear to be structurally damaged.
- Inspect the structural integrity of the foam support blocks to ensure they are in good condition (i.e. not damaged or crushed).
- Ensure the foam support blocks and cooler have not moved from their dedicated positions in transit. To check this, make sure the foam support blocks are firmly inserted upwards into the female openings in the tank.
- Ensure the power cable socket outlet has been passed through the rear access hole and is taped to an exterior panel on the side of the cooler.

To correctly lift the CW-6S cooler:

1. Remove the top section of the shipping crate frame (Ref Pg 8). Remove the 2x rear foam supporting blocks from underneath the cooler. This will allow the cooler to rock back and forth such that the slings can be placed.

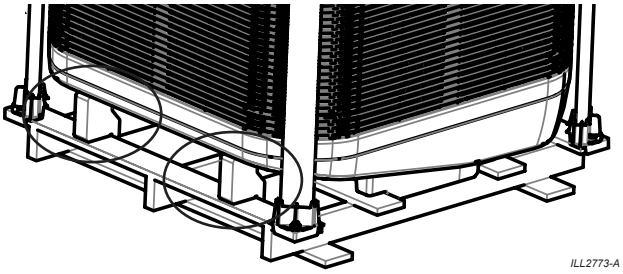

ILL2773-A

2. Ensure the large foam supporting blocks are firmly inserted into the female openings in the underbody of the tank. This secures the foam supports to the tank for lifting and provides retention channels for slings.

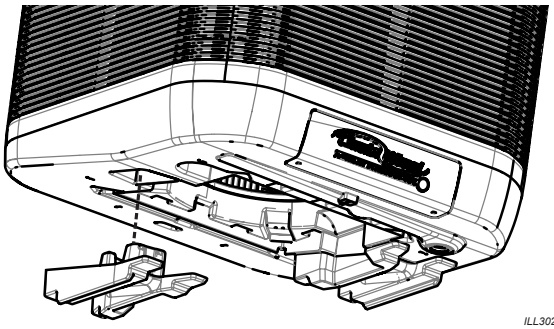

ILL3026-A

INSTALLATION

3. Place the slings underneath the cooler and through the dedicated recess channel in the foam supporting blocks as shown. Rocking, lifting &/or blocking up the front of the cooler will be required to pass slings beneath cooler while it sits on the pallet. Consider using parts of the packaging to aid with this process. Care must be taken not to damage cooler tank. Ensure appropriately rated slings are used. The slings must also comply with Australian (or local) Standards. Suggested sling length is 6m (19' 7"). Once properly slung and fastened, the cooler is ready for lifting.

Suitability of the lifting method is the riggers responsibility.

ILL3027-A

DO NOT LIFT USING ANY CABINET FEATURES, ALTERNATE SLING LOCATIONS OR BY RETRO-FITTING LIFTING LUGS.

The cabinet may be damaged and/or lift safety may be compromised.

DO NOT ATTEMPT TO LIFT THE COOLER WITHOUT THE FOAM SUPPORTING BLOCKS.

The foam supporting blocks are essential for lifting. If they are missing or damaged, contact the dealer and/or resort to the 'piece-by-piece' method of installation.

DO NOT ATTEMPT TO LIFT THE COOLER ON THE PALLET.

It is not possible to install the cooler via crane if the pallet is used to sling the cooler.

ILL2785-A

CRANE INSTALLATION

Important! Two people are required to guide the cooler onto the dropper.

Lifting the Cooler

1. Prepare the cooler for lifting as per the 'Lifting the Cooler' section.
2. Ensure that the transition has been secured to the dropper as per the 'Preparing the Dropper & Transition' section.
3. Ensure that the dropper is mounted as per the 'Mounting the Dropper' section.
4. **IMPORTANT!** Ensure that the control cable has been installed as per the 'Preliminary Cable Installation' section.
5. Carefully lift the cooler to the dropper location.

Marrying the cooler and transition

6. **Important!** Position the cooler above the dropper and stabilize. Carefully lower the cooler very slowly until it sits approximately 100mm (4") above the transition. Stop lowering the cooler at this point.
7. Check the orientation of the cooler to make sure it is in the correct position. As shown, the branding on the front of the cooler should be positioned toward the front of the dropper.

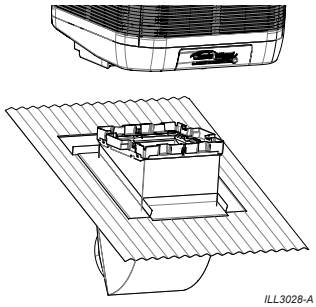
ILL3028-A

8. When the cooler is suspended slightly above the dropper, remove the tape restraining the power cable and allow it to dangle loosely. Using the height template tool, guide the mains power cable into the corner recess slot on the transition and down into the dropper. **CAUTION: Avoid placing hands and body parts underneath the cooler whilst it is suspended.** Once this is complete, check to make sure that the white dropper transition straps are visible (as shown). These straps are flared outwards and should be protruding out from the tank as shown. The (black) foam packaging/sling guides beneath the tank have been designed to guide the (white) transition straps into their positions outside the dropper without fouling on the transition.

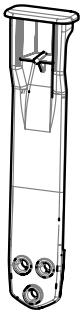
ILL3030-A

9. **Important!** Stabilise the cooler to ensure that it is not rocking around whilst suspended.
10. When the cooler is stable and in position carefully begin lowering the cooler onto the transition. The dropper transition straps should fall outside the edges of the dropper and transition, but may need to be guided onto the outside surface of the transition and the dropper when the cooler is being lowered. Be extremely careful not to damage the transition straps, communication or mains cables during this process.

WARNING! BE EXTREMELY CAREFUL NOT TO TRAP HANDS IN BETWEEN THE COOLER AND TRANSITION. DO NOT USE YOUR HANDS TO GUIDE THE TRANSITION STRAPS.

DO NOT POSITION ANY PART OF YOUR BODY UNDERNEATH THE COOLER WHILE IT IS SUSPENDED BY CRANE.

ILL2786-A

11. Once the cooler has been safely placed on the transition piece, remove the crane slings and dispose of the foam lifting blocks thoughtfully.

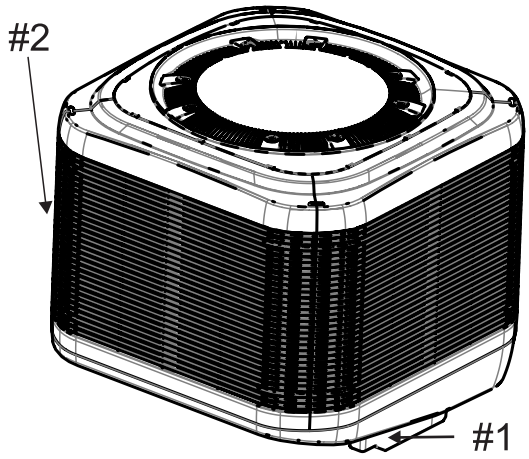

ILL3031-A

CRANE INSTALLATION

Securing to the dropper

12. Ensure cooler is not hung-up on the edge of the transition anywhere. The cooler may need to be adjusted while sitting on dropper to achieve this. Care must be taken in maneuvering cooler not to dislodge unit or damage any parts of cooler. Ensure the communications or mains cables are not trapped or pinched between the dropper and tank. Align the dropper transition straps with the pre-drilled holes in the dropper/T-washers. Some transition straps may need to be pulled down to meet with pilot holes in the dropper. This can be achieved with a small screwdriver inserted into strap holes.
13. Begin securing the cooler to the dropper using the dropper transition fasteners provided. A total of 12x screws are required. Only use the screws provided. If an alternative screw is used, ensure it is the same length and specification (as follows):

    Screw TEK, Hex, Steel, 12 Gauge, 30-35mm x 14TPI, Category 3-5 (Depending on local regulations), No seal.

Once the transition straps have been secured to the dropper, the major cooler installation is complete.

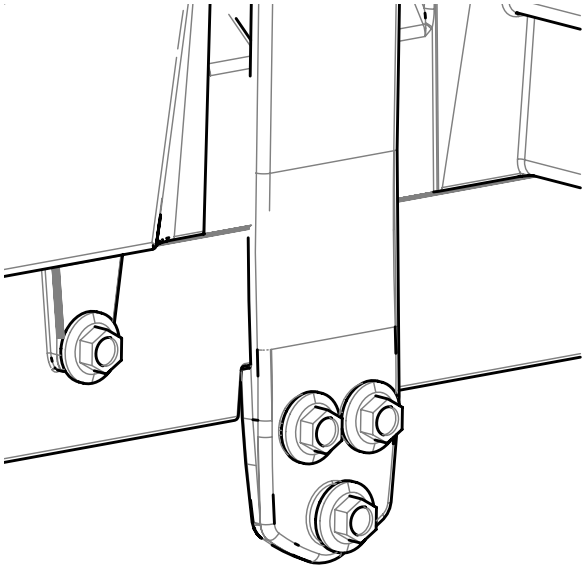

ILL2787-A

IMPORTANT! If the pilot holes have not been drilled as per the instruction on Page 16, abort the lift and ensure this is completed now, before proceeding any further with the installation.

ELECTRICAL REQUIREMENTS

Installation of the cooler must conform to local electrical rules, regulations and standards.

Important! It is a requirement of Seeley International that all coolers be connected to a dedicated circuit to the distribution board, with a separate circuit breaker and incorporate a separate isolation switch in accordance with the local wiring rules.

A 10A socket outlet within one metre of the dropper's cable exit hole is required.

The following specifications for the cooler electrical supply are required: **220 - 240V / 50 or 60Hz Single Phase. (See nameplate for exact data in cooler)**

For CW-6S models:
The electronics module is fitted with a replaceable 15A anti-surge fuse and an isolation switch that is toggled manually. **WARNING!** Replacing the fuse exposes the operator to high voltage components. this operation may only be conducted by a qualified electrician. To replace the fuse: turn off the main isolator to the cooler, turn off the electronics isolation switch, remove the electronics cover and replace the fuse located to the left of the isolation switch.

WARNING! If the supply cord is damaged, it must be replaced by the manufacturer, its service agent or similarly qualified persons in order to avoid a hazard.

CONTROL MODULE WIRING DIAGRAM

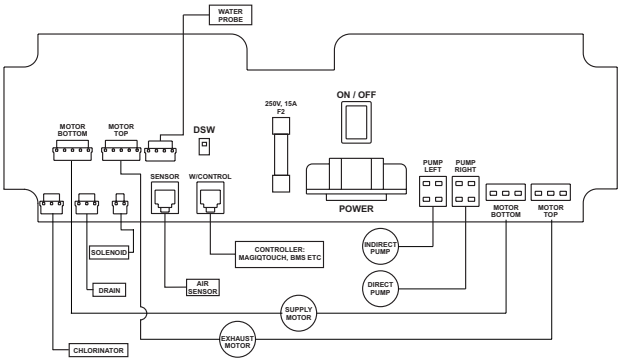

ILL2681-B

FIELD WIRING DIAGRAM

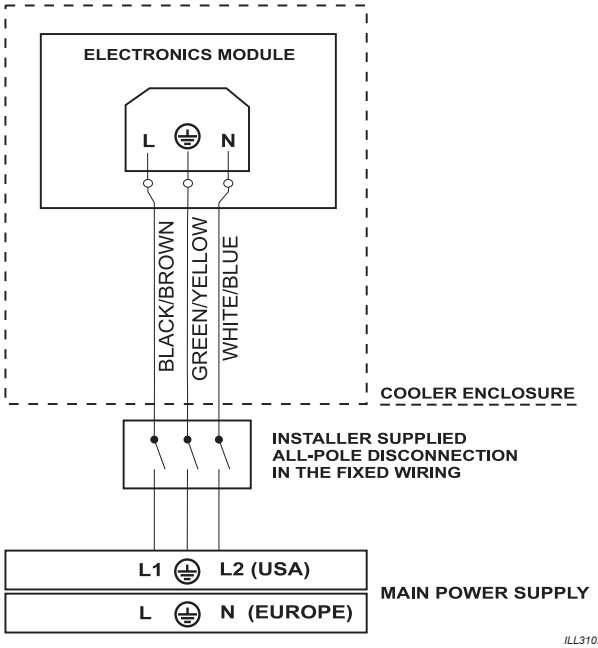

ILL3102-A

WATER REQUIREMENTS

Installation of the cooler water supply must conform to local plumbing rules, regulations and standards.

The following specifications for the cooler water supply are required:

Water Connection	**½" BSP**
Min Water Pressure	**100kPa (15psi)**
Max Water Pressure	**800kPa (115psi)**
Min Water Flow	**13 liters/min (3.4 gallons/min)**
Max Water Flow	**20 liters/min (5.3 gallons/min)**
Max Water Temperature	**40°C (104°F)**

Important! If the water pressure exceeds maximum specification then a pressure reducing valve is required and must be supplied and fitted by the installer.

A permanent water supply is required to be connected to the cooler. The water connection point is located on the underside of the cooler, left hand side.

You must install a manual 1/4 turn ball type shut off valve (do not use a stop cock) in the water supply line adjacent to the cooler, subject to local plumbing regulations. This allows the water supply to be isolated whenever work needs to be done on the cooler.

Water connection is via a ½" BSP male to 3/4" BSP female braided hose (supplied). The 3/4" end connects straight to the inlet solenoid. Use the ½" BSP male inlet end of hose to connect to the mains supply.

Always ensure that the water pipe connection does not place sideways strain onto the float valve.

Important! In areas subject to freezing, the water supply line to the cooler requires a drain down facility at the lowest point in the water supply pipe.

Important! Flush the water pipe to remove any swarf before final fitting. Swarf can lodge in the solenoid and float valve, preventing them from functioning correctly.

INSTALLING THE DRAIN VALVE

Water drained from the cooler must be carried away to a suitable discharge point in accordance with local regulations.

Important! Never drain water from the cooler directly on to the roof.

The drain valve is not factory fitted to the cooler. This must be completed on site.

Assemble the drain valve (1) as shown:

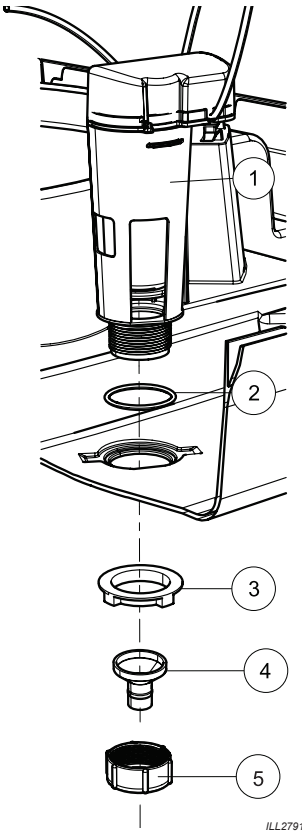

Make sure the “O”-ring (2) is fitted before placing the drain valve into the hole. Screw the nut (3) up tightly by hand underneath to secure the drain valve. Locate the funnel (4) up against the bottom of the drain valve thread and secure with the second, larger nut (5).Make sure that you use the correct drain adaptor.

Make sure the drain water discharge flows freely away from the cooler.

Important! Do not over-tighten plastic fittings.

CONNECTION TO MAINS WATER

A permanent water supply is required to be connected to the cooler. The water connection point is on the underside of the cooler.

The cooler is factory fitted with an inlet solenoid. A new detachable hose set is also supplied in the accessory kit. It is a requirement to fit the new detachable hose set supplied. Any old hose sets should not be re-used.

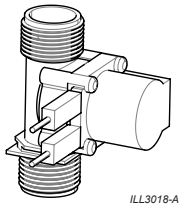

Secure the Solenoid Cover Plate in place against the cooler tank by using 2x TEK screws supplied. Fit the flexible hose and washer assy to the inlet of the solenoid, checking that the solenoid strainer is in place.

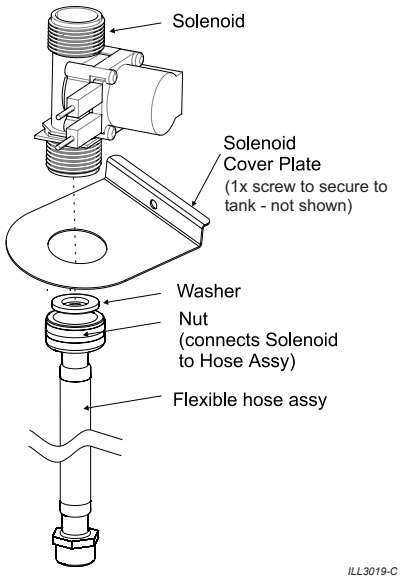

Use the 1/2” BSP male inlet end of the supplied braided hose to connect to the mains supply.

You must install a manual 1/4 turn ball type shut off valve (do not use a stop cock) in the water supply line adjacent to the cooler, subject to local plumbing regulations. This allows the water supply to be isolated whenever work needs to be done on the cooler.

Always ensure that the water pipe connection does not place sideways strain onto the inlet solenoid.

Important! In areas subject to freezing, the water supply line to the cooler requires a drain down facility at the lowest point in the water supply pipe.

Important! Flush the water pipe to remove any swarf before final fitting. Swarf can lodge in the solenoid and float valve, preventing them from functioning correctly.

WATER HAMMER

It is the responsibility of the installer to fit an appropriate water hammer arresting device external to the cooler if required.

You must install a manual 1/4 turn ball type shut off valve (do not use a stop cock) in the water supply line adjacent to the cooler,

OR

Always install a shut-off valve (do not use a non-return type valve) close by the air cooler.

MAINS CABLE CONNECTION

MAINS AND COMMUNICATION CABLE PATH

This step leads on from the ‘Preliminary Cable Installation’ section, refer to “PRELIMINARY CABLE INSTALLATION” on page 15. The power socket end of the mains cable should be passing through the corner recess slot in the dropper transition and hanging loose on the INSIDE of the dropper. **Ensure it is not being pinched or crushed.**

1. The communications cable should be hanging loose on the outside of the dropper.

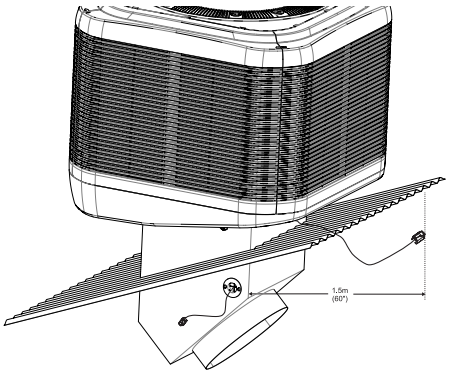

ILL3029-B

2. Feed the control cable through the rear access hole (RHS) from the underside of the tank.

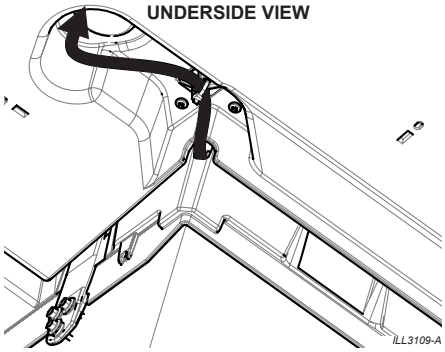

ILL3109-A

3. The control cable needs to be routed though the cable tray on the inner wall of the tank, and then fed through to the control module.
   Important! Ensure the mains cable is not submerged or touching the water in the tank at any point along the cable length. Make use of the resealable cable restraints. Cable tie to existing looms if necessary.

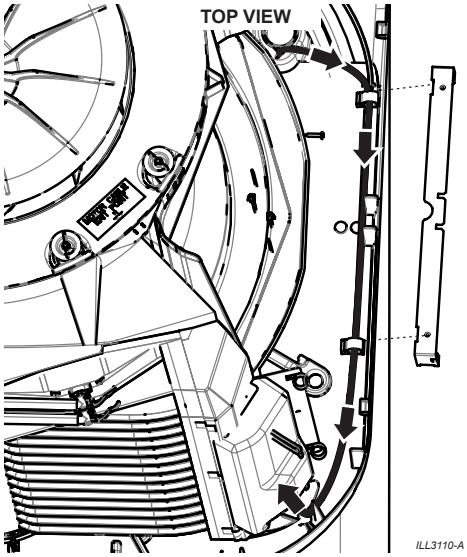

ILL3110-A

4. Remove the Control Module cover. Connect the communications cable to the socket labelled “Wall Control” Replace the cover.

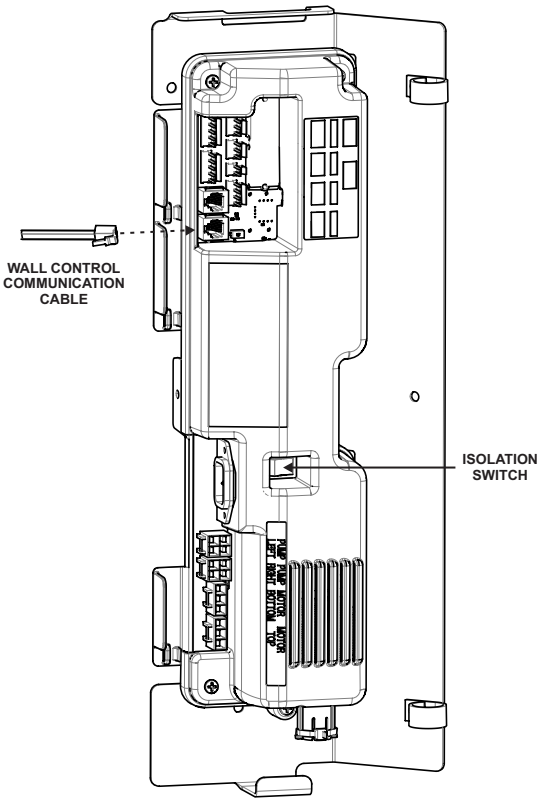

ILL3111-B
ILL3111-C

5. Clip the loose cables into the restraint on the rear tank hole to lock them into place and then insert the plug provided from inside the tank.

   This will seal the hole in the tank.

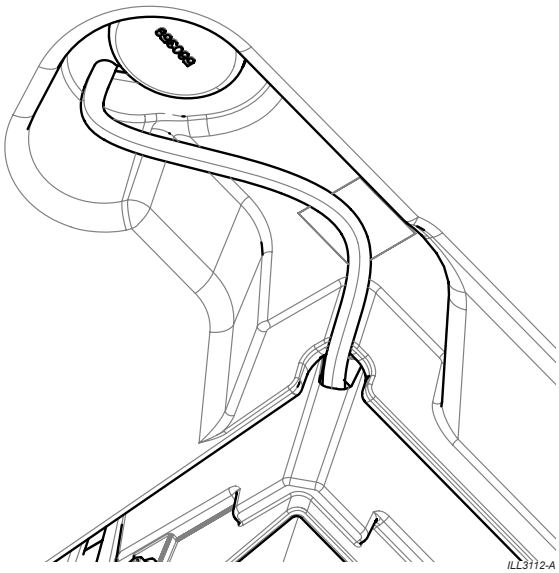

ILL3112-A

6. Push the remainder of the loose cables back down into the dropper. Leave some slack on the cables so they sit comfortably.

WALL CONTROL INSTALLATION

MAGIQTOUCH CONTROLLER

Refer to Installation Manual MagIQtouch Controller, Item 1D included in Installation Components.

ILL1582-C

CONTROL SYSTEM

Climate Wizard coolers are supplied from the factory with a MagIQcool Wall Control, a MS1 BMS Control and a 20m (65') control cable. This makes it possible for the cooler to be controlled independently and automatically from the zone to which it is delivering cool air.

The MagIQcool Wall Control incorporates a thermostat that regulates fan speed to try and maintain indoor temperature within ±1°C (± 3°F) of the set temperature.

LOCATING THE WALL CONTROL

Locating the Wall Control

The Wall Control should be placed approximately 1.5 metres above the floor, in the most used room in the home. This will give the optimum temperature sensing and operating position for the user.

Placement is critical for correct functioning of the thermostat (incorporated in the Wall Control). The following points must be taken into consideration:

- Avoid direct sunlight exposure.
- Avoid mounting on external walls.
- Avoid mounting the wall control near heat sources such as stoves and televisions.
- Do not locate in the direct airflow of the duct outlets.
- Do not locate in strong drafts or in dead spots such as cupboards/drawers.
- Always fill in the cable entry hole. Hot air coming through the wall may interfere with the temperature measurement.

CAUTION: Make sure there are no electrical cables, gas or water pipes (or similar), behind where you intend to drill.

Running the Control Cable to the Wall Control

Using the loop on the end, draw the cable through the wall cavity to the hole made at the wall bracket. Carefully remove the tape from the cable loops and check that the plug has not been damaged. Connect the cable to the wall control and mount the wall control onto its bracket.

Important! Take care not to damage the cable or plug during this process. Always seal the cable entry hole.

MOUNTING THE MAGIQTOUCH CONTROLLER

Remove the mounting bracket from the rear of the MagIQtouch Controller.

Step 1

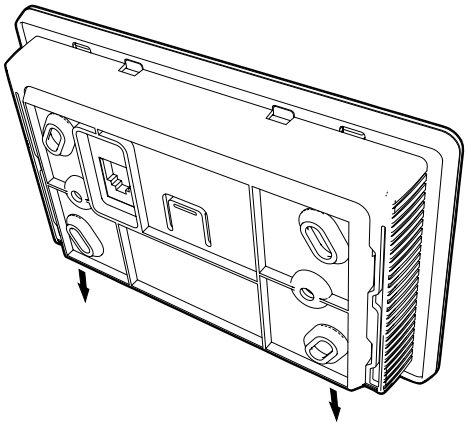

ILL1584-A

Step 2

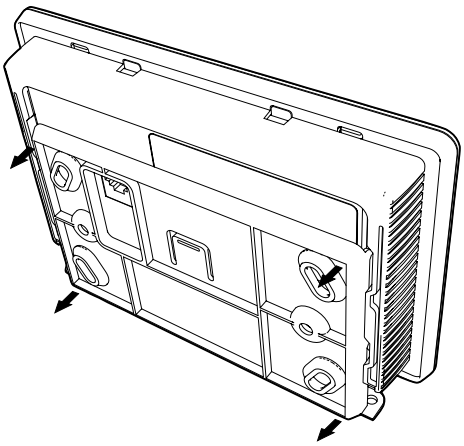

ILL1585-A

Step 3

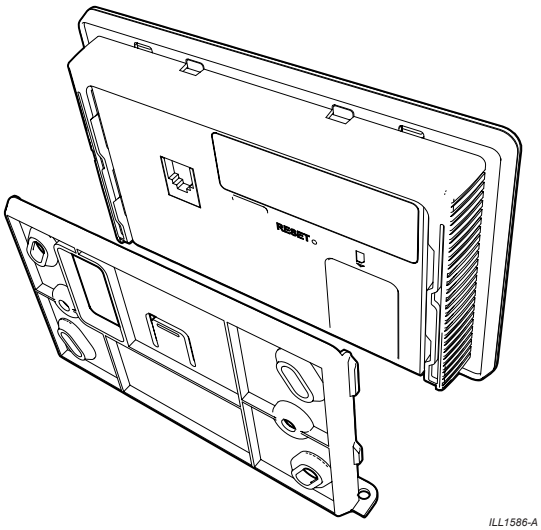

ILL1586-A

WALL CONTROL INSTALLATION

Using the bracket as a template, mark the centre points for the screw and cable access holes.

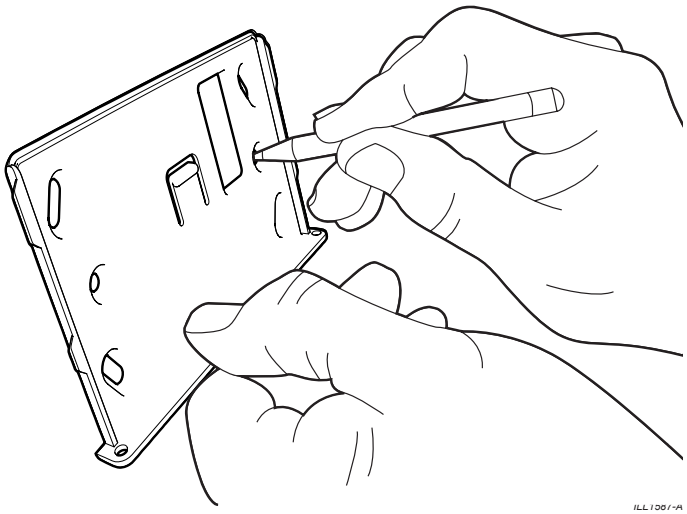

ILL1587-A

Important! The cable hole should be positioned centrally within the rectangular window in the mounting bracket.

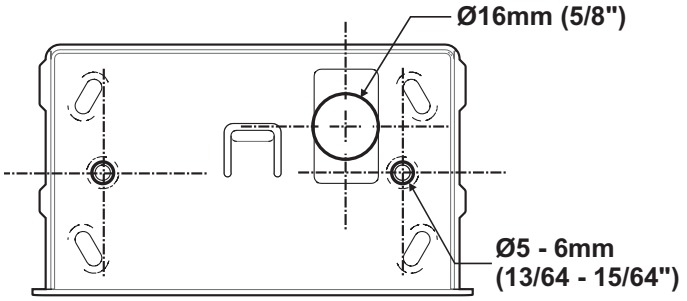

ILL1597-B

Drill a 16mm (5/8”) hole for cable access, and two smaller holes for the wall plugs provided 5mm (13/64”) holes for plasterboard walls or 6mm (15/64”) holes for brick walls).

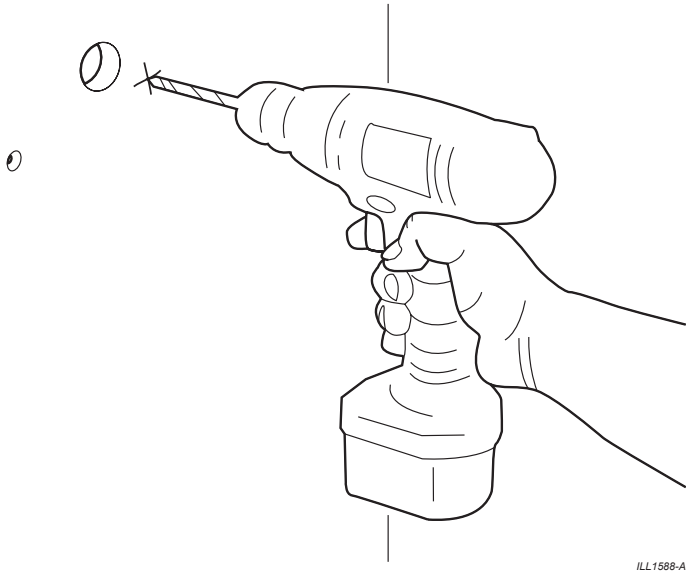

ILL1588-A

Insert wall plugs into holes. Align and screw the bracket into position using the supplied screws.

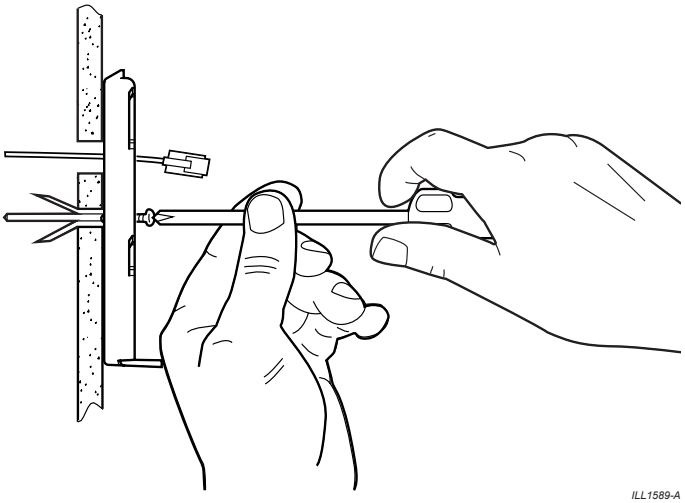

ILL1589-A

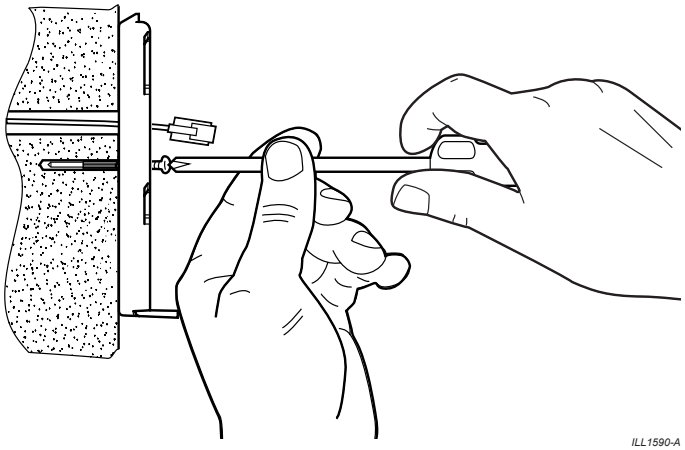

ILL1590-A

Alternatively, a standard stud mounting bracket (used for wall plates) can be used with plasterboard walls.

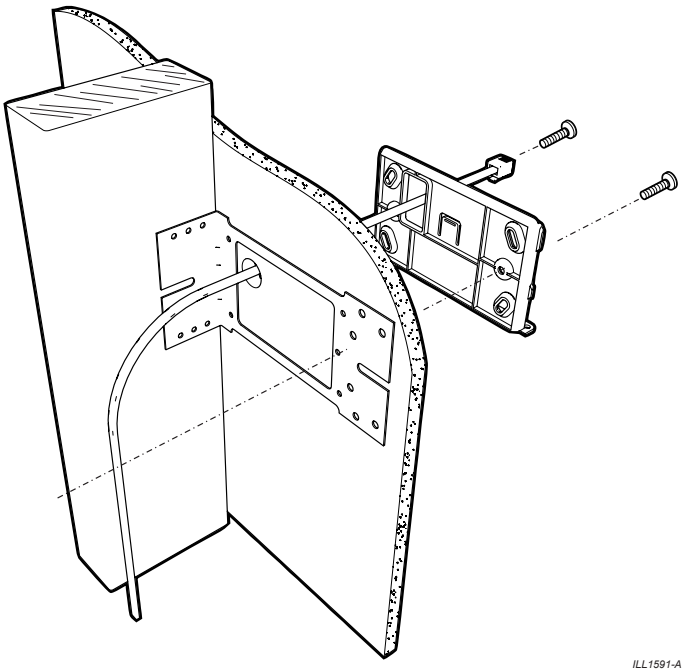

ILL1591-A

WALL CONTROL INSTALLATION

Draw the cable through the wall cavity to the hole made at the wall bracket. Connect the cable to the wall control and mount the wall control onto its bracket.

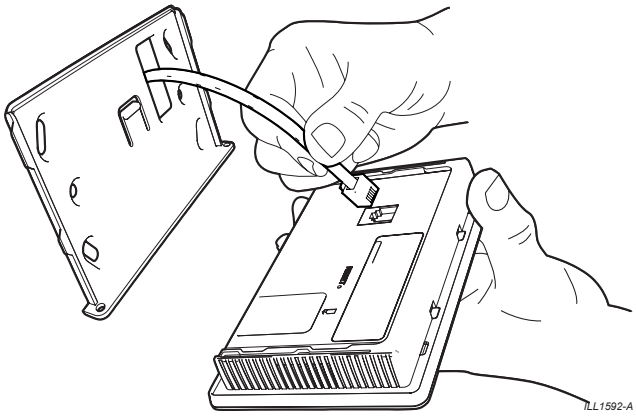

Important! Take care not to damage the cable or plug during this process.

Important! Drafts within the wall cavity can impact the temperature reading of the wall control. We recommend that the cable access hole be sealed, but in such a way that the cable can still retreat into the wall cavity.

Slide and align the wall control over the protruding bracket tabs. Pull the wall control down so the bracket tabs engage and locate with the keyway slots on the rear.

Step 1

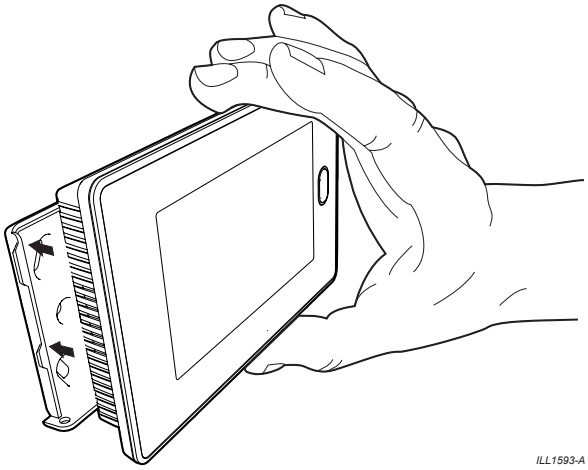

Step 2

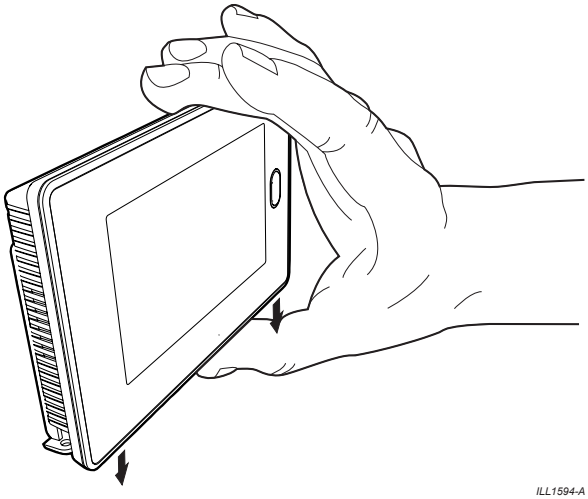

Ensuring the MagIQtouch Controller is properly connected power up the heater/cooler.

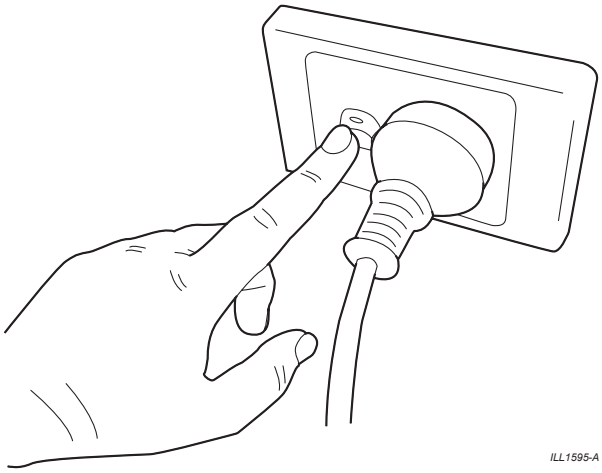

To activate the MagIQtouch Controller screen, press the button to the right.

CONTROL SCHEMES

CONNECTING THE MAGIQTOUCH / MAGIQCOOL CONTROLLER®

Refer to the installation manual provided with the MagIQtouch Controller for instructions on installing the controller. The wall control cable plugs into the electronics module - (A) (refer diagram adjacent). Coolers are supplied with a 20m (66') control cable. Longer cable lengths are available from Seeley.

Important! The maximum cable length allowed from the MagIQtouch Controller to the first cooler is 20 metres (66'). For any additional coolers added into the system with a link module the maximum allowed length is 40 metres (131'). Therefore, failure of the product or components to operate correctly due to modification to supplied cables, or the use of non-approved cables will NOT be accepted under the Manufacturer's Warranty.

We have this cable available through our Sales order office and spare parts outlets in the following lengths:

Part No.	Length	Details
833880	20m	MagIQtouch Controller Cable (No Ferrite)
823553	20m	MagIQtouch Controller Cable EXQ/EXS (With Ferrite)
862873	1.5m	MagIQtouch Controller Cable (No Ferrite)
861265	3m	MagIQtouch Controller Cable (No Ferrite)
864396	30m	MagIQtouch Controller Cable EXQ/EXS (With Ferrite)
864402	40m	MagIQtouch Controller Cable EXQ/EXS (With Ferrite)

MAGIQTOUCH CONTROLLER® OPERATION

Diagnosis and cooler operating information can be viewed from the MagIQtouch Controller. Faults are displayed on the screen as they occur.

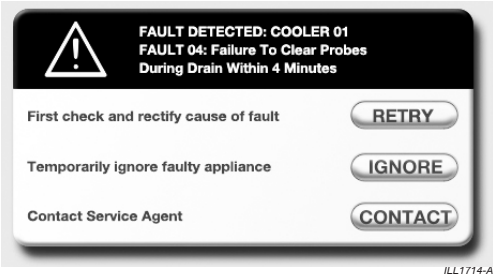

ILL1714-A

Cooler operating information is available from the 'Service Operating Screen' under the COOLER tab of the SETTINGS menu.

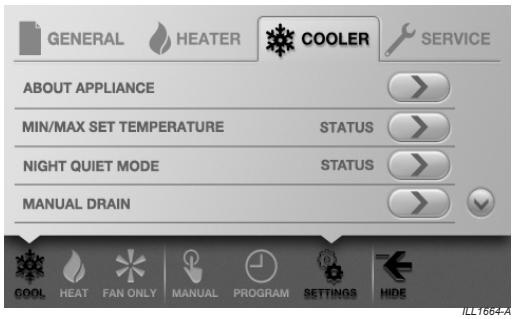

ILL1664-A

For individual, direct control installations, Climate Wizard CW-6S coolers are supplied from the factory with:

a) MagIQtouch Control Kit and 20m (65') control cable, and as an option

b) MagIQtouch MS1 BMS Industrial Controller

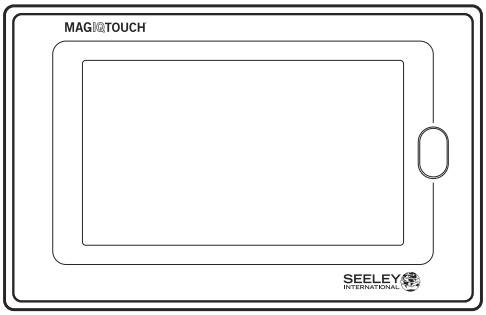

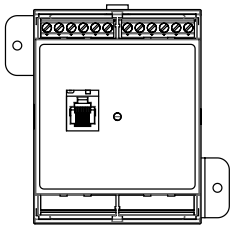

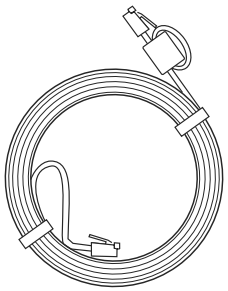

OPTION - MS1 BMS INDUSTRIAL CONTROL

ILL2792-A

The MagIQtouch Controller and the M1 BMS Industrial Controller are both compatible for use with the Climate Wizard CW-6S cooler.

These make it possible for the cooler to be controlled independently and automatically from the zone to which it is delivering cool air. The MagIQtouch incorporates a thermostat that regulates fan speed to maintain indoor temperature within +0.5°C (+ 1°F) of the set temperature. Climate Wizard coolers are also supplied with input/output connectors via a MagIQtouch MS1 BMS Interface module to enable the cooler to be controlled from an external location, using a modbus BMS system.

Whichever control option is being used, the inbuilt Climate Wizard water management and fault monitoring features are always functional. The Climate Wizard control scheme incorporates some parameters which can be altered to other settings if the default settings are not suitable.

BUILDING MANAGEMENT SYSTEM (BMS) INTERFACE (OPTIONAL)

Refer to the Installation & Operation Manual for MagIQtouch MS1 BMS Industrial Controller, included with the cooler.

This can be set up to control the Climate Wizard from EXTERNAL devices, such as PLCs and Building Management Systems.

Note! Even if a BMS is used, it is suggested that technicians obtain a MagIQtouch Wall Controller as a tool for use during servicing. The MagIQtouch Controller provides additional user and technician functions.

FAULT CODES INDICATED BY LED's ON THE COOLER ELECTRONICS MODULE

The CW3 cooler has 2 LED's visible on the control PCBA. One is Tri-Colour and can glow Green, Red or Amber.
The other is Red only.

TRI-COLOUR LED			
LED	**Wall Control Fault Code**	**Fault Description**	**Suggested Remedy**
2 Green Flash then 2 seconds off	**-**	**NORMAL OPERATION**	**-**
1 Red Flash then 2 seconds off	**Fault Code #1**	**COMMUNICATION FAILURE** Wall Control: No valid message for 60 seconds	Check communication cable connections. Replace Wall Control. Replace Communication Cable.
2 Red Flash then 2 seconds off	**Fault Code #2**	**FAILURE TO DETECT WATER AT LOW PROBE** No water at low probe 20 minutes after solenoid valve opening.	Check water supply on. Check solenoid valve open. Check drain valve closed. Check water management probe position relative to drain valve overflow. Clean water management probe.
3 Red Flash then 2 seconds off	**Fault Code #3**	**FAILURE TO DETECT WATER AT HIGH PROBE** No water at high probe 10 minutes after water detected at low probe.	Check solenoid valve open. Check water management probe position relative to drain valve overflow. Clean water management probe. Check water supply pressure sufficient to maintain tank capacity.
4 Red Flash then 2 seconds off	**Fault Code #4**	**FAILURE TO CLEAR LOW PROBE DURING DRAIN** Water still detected at low probe 5 minutes after drain opened.	Check drain valve open. Check drain pipework not blocked. Check solenoid valve closed. Clean water management probe.
5 Red Flash then 2 seconds off	**Fault Code #5**	**WATER DETECTED AT HIGH PROBE BUT NOT LOW PROBE.**	Clean water management probe.
6 Red Flash then 2 seconds off	**Fault Code #6**	**FAILURE TO CLEAR HIGH PROBE.** Water still detected at high probe after Pump Test sequence.	Check solenoid valve not stuck open. Check all pumps operating when required Clean pumps. Check pump hoses not blocked. Check excessive rain not entering cooler. Clean water management probe.
7 Red Flash then 2 seconds off	**Fault Code #7**	**SUPPLY MOTOR ERROR.**	Check Motor Power Cable connections. Check Motor Communications Cable connections
-	**Fault Code #8**	**WARM START** Mains input voltage is under 93Vac but not low enough to reset the PCB. Fault Code recorded when voltage returns to useable level.	Consult with Building Manager.
1 Green/Red Flash then 2 seconds off		**CHLORINATOR PERFORMANCE DEGRADED** Chlorinator operating current is less than set point.	Clean Chlorinator Check flushing hose correctly attached. Prepare to replace Chlorinator at next service.
2 Green/Red Flash then 2 seconds off		**CHLORINATOR PERFORMANCE SERIOUSLY DEGRADED** Chlorinator operating current is less than 50% of set point.	Replace Chlorinator now to avoid fault in near future.
3 Green/Red Flash then 2 seconds off + 10 Red Flash	**Fault Code #10**	**CHLORINATOR REACHED END OF LIFE**	Replace Chlorinator now.
4 Green/Red Flash then 2 seconds off		**CHLORINATOR SHORT CIRCUIT WARNING** Chlorinator current >> target.	Clean Chlorinator Check flushing hose correctly attached. Check no debris between the Chlorinator Plates.
5 Green/Red Flash then 2 seconds off + 10 Red Flash	**Fault Code #10**	**CHLORINATOR SHORT CIRCUIT FAULT** Chlorinator current >> target again within 15 mins of reservoir drain and re-fill.	Check no debris between the Chlorinator Plates. Replace Chlorinator now.
13 Red Flash	**Fault Code #13**	**EXHAUST MOTOR ERROR.**	Check Motor Power Cable connections. Check Motor Communications Cable connections

RED COLOURED LED: This LED indicates the status of the conductivity measurement circuit and the status of the Salinity Control Method

RED LED	
LED	**Fault Description**
On Solid	No Water at Low Probe or Conductivity <9µS/cm
1 Red Flash	Water Manager and Conductivity < 1500µS/cm
2 Red Flash	Water Manager and Conductivity < MAX (Parameter A5).
3 Red Flash	Count 8 re-fills to High Probe (Parameter A1)
4 Red Flash	24 Hour Clean Drain Mode Running

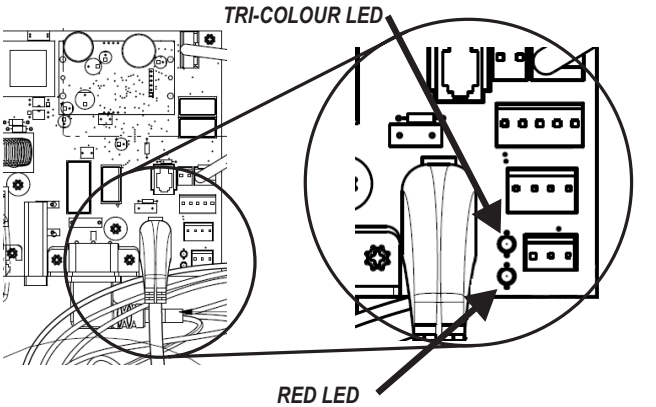

COMMISSIONING COMPLETION CHECKLIST

ROOF REINFORCEMENT

- □ GUIDELINES - Have supplied guidelines been followed?. Has other engineering reinforcement been conducted?

DROPPER INSTALLATION

- □ LEVEL.
- □ SECURE.
- □ FLASHING.

COOLER

- □ SECURE - The cooler is secure and level on the dropper using all fixings supplied.
- □ SEALED - The dropper and all penetrations are correctly flashed and sealed.

WEATHERSEAL

- □ OPERATION - The Weatherseal operates correctly and can open and close without interference.

PLUMBING

- □ FLUSHED - The water pipes were flushed of any foreign materials before connection to the cooler was made.
- □ SOLENOID OPERATION - Verified
- □ FLOW RATE - 13 - 20L/min.
- □ NO EXTERNAL LEAKS - The water is connected with no leaks at fittings.
- □ NO INTERNAL LEAKS - Check the internal water hose is securely fitted to water distribution spreader on the lid and to the pumps. Check the hose circuits are connected correctly. The blue hose circuit must be connected to the RHS pump and the top manifold assembly spreader connection. The grey hose circuit must be connected to the LHS pump and the lower manifold assembly spreader connection.
- □ SECURE - Water pipes are correctly saddled as per plumbing regulations.
- □ OWNER INSTRUCTIONS - The owner has been instructed on how to isolate the water to the system in case of emergency.

PUMPS

- □ PUMP OPERATION - Verified.
- □ WATER LEVEL RESPONSE- The water probe is controlling the water level correctly.

DRAIN VALVE

- □ INSTALLED - The drain valve is installed correctly, as detailed in this installation manual.
- □ DISCHARGE - The drain water does not discharge onto the roof surface.
- □ TESTED - Drain the tank manually. Check the drain fittings and pipes, making sure there are no leaks, restrictions (kinks) or blockages.

MAGIQTOUCH CONTROLLER

- □ LOCATION - Appropriately positioned.
- □ OPERATION - Time/Date/Year set.

HEAT/COOL DUCT SWITCH

- □ OPERATION - Verified.

POWER

- □ REGULATIONS - The power supply adheres to all local and national regulations and is wired back to the distribution board on its own separate circuit.
- □ CHECK CABLES - Cables have been correctly connected to the control boxes:
  - □ Power supply
  - □ Motor cable(s)
  - □ Control cable
  - □ Pressure Sensor Hose(s)
  - □ Drain valve
  - □ Solenoid cable
  - □ Pump cable
  - □ Probe cable
- □ OWNER INSTRUCTIONS - The owner has been instructed how they can electrically isolate the unit at the meter box in case of an emergency.

DUCTWORK

- □ DESIGN - Adequately sized and positioned, balanced run lengths. Air directed appropriately.
- □ INSTALLED - Hung, lead-ins to outlets, no kinks or tight bends. Fitted correctly.
- □ FULLY EXTENDED - All ducts are hung correctly and there are no squashed or bunched up segments.
- □ NO CHOKING - All ducts are free of kinks or restrictions.
- □ STRAIGHT - Curves and bends are reduced, duct runs are as straight as possible.
- □ NO LEAKS - All ducts are hung correctly and there are no air leaks.
- □ CONTROLLER SEALED - All wall holes behind the controller have been sealed.
- □ QUIET - Check that the cooler runs quietly and with an even distribution of air to all outlets.
- □ AIRBALANCE – The air balance for all outlets has been adjusted to the customer's satisfaction.

WETTING THE CORES

- □ CORES FLUSHED – To prevent hot air from blowing out of the supply ducts it is important to allow time to pre-wet the cores by flushing them with water on start-up. Operate in COOL mode, lowest speed for 1 minute, then drain the tank.

FINAL TEST

- □ Once you are satisfied that the cooler is installed and commissioned correctly, run the cooler and ensure that everything is working as it should.
- □ Check for unusual or excessive sound output at various fan speeds.
- □ Check for excessive vibration and/or rattle sounds.
- □ Check for unusual odours (musty, mouldy or burning)

CUSTOMER HANDOVER

- □ Principles of Ducted Indirect Evaporative Cooling explained.
- □ How far the windows need to be opened.
- □ How to turn the cooler on.
- □ How to operate the controller.
- □ How to drain the cooler.
- □ How to turn the power and water off.
- □ Maintenance requirements.
- □ The customer has been given the Owner's Manual which includes Warranty details.

CLEAN-UP

- □ All the installation rubbish has been removed and, if applicable, any property damage repaired. Your aim should be to have the customer not even be aware that you have been on site.

FINAL CHECK

- □ With all side panels in place and the unit running for a short period in cooling mode, ensure all pads have even water saturation and there are no visible water leaks

ADJUSTING COOLER SETTINGS

Within the SETTINGS menu of the MagIQtouch Controller is the COOLER sub-heading. Here various settings of the cooler can be adjusted.

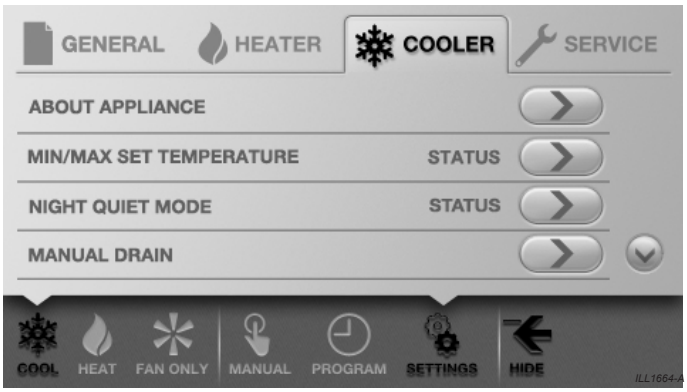

About Appliance

Displays information such as model number, serial number and software version for all coolers connected to the controller.

Night Quiet Mode

Restricts fan speed to a specified level during a specified night period.

Manual Drain

Turns cooler off and drains the tank.

Pad Flush

Turns cooler off and runs pump for a specified amount of time.

Auto Restart

By turning this option to ‘ON’, the cooler will automatically restart after a power failure.

Drain and Dry

Cooler will drain and fan will run for 1 hour every day at a specified time.

Water Manager

Select the preferred water management method:

- Salinity Measurement - replaces water when salinity level reaches set point.
- Timed Drain - drains the tank after 8 tank fill cycles or every 65 minutes (system dependant).
- No Drain Control - salinity control external to electronics eg. continuous bleed.
- No Water Thermostatic - allows thermostatic control in VENT mode. No water present. Cooling performance is limited.

Weatherseal Open Speed

The cooler fan will turn on at the specified weatherseal opening speed for the first 10 seconds each time it starts up. It will then return to the set fan speed.

Pre-wet

When COOL mode is activated, the pump will run for 90 seconds before the fan is switched on.

Salinity Level

Sets the salinity level at which the tank will drain in “SALINITY MEASUREMENT” mode.

Tank Drain Delay

Sets the time delay before the drain valve opens after the pump in the cooler is turned off.

Autostart

Automatically restarts the cooler in the last operating mode after a power outage.

TROUBLE SHOOTING

Symptom	Cause	Action
Inadequate cooling	Under-sized cooler.	Replace with larger cooler.
	Under-sized ducts.	Replace with larger ducts.
	Clogged or dirty cooling cores.	Replace core.
	Dirty inlet air filter.	Replace or clean filter.
	Dry cores or lack of water while cooler is operating.	Check water distribution system for possible obstruction in hoses. Check pump.
	Insufficient air discharge openings or inadequate exhaust from building, causing high humidity and discomfort.	Make sure there is adequate provision for exhausting stale air from building (open windows and doors).
	Excessive resistance from poorly located exhaust air ducting.	Ensure exhaust air duct is clear of any obstruction.
	Excessive ambient humidity (see also item above re inadequate exhaust).	On days during summer when ambient humidity is high the cooler will not reduce the temperature as much as on drier days. There is no remedy.
Noisy cooler	Fan out of balance.	Clean the fan. Check Fan condition - no broken blades, missing segments or obvious damage.
	Air distribution system creating too much back pressure, or changes of direction too sudden, or diffusers too small.	Have contractor re-evaluate his design; use bends instead of elbows; change grille sizes.
	Attenuator directing noise in wrong direction.	Attach attenuator to direct sound in a different direction.
Pump fails to operate	Circulation pump motor failure.	Replace circulation pump.
Fan fails to start.	Main power circuit breaker tripped or fuse blown.	Check cause of overload. Reset circuit breaker or replace fuse. Adjust motor amp setting if necessary.
	Fan motor burned out.	Replace motor.
	Low system voltage.	Consult with power supply authority.
	Check fault condition via the wall control unit or the tri-colour LED on cooler electronics module.	Rectify fault as indicated and restart the cooler.
	Wall Control failed.	Replace wall control.
	If the wall or remote control is in AUTO or AUTO TIMER mode and no fan bars are displayed the fan will not start.	Switch to MANUAL mode to check the fan operation.
Pump runs but no water circulation or Pump runs but pads lack water	Insufficient water in reservoir.	Check probe cable plugged in fully, clean probes.
	Water hoses blocked.	Check and clean out blockage.
	Pump cavitation plate blocked.	Clean pump cavitation plate.
Continuous overflow of water.	Water Management probes adjustment not correct.	Check probe cable plugged in fully, clean probes.
Water being blown into the building	Auto Drain Valve malfunctioning.	Check and remedy function.
	Supply drain plenum blocked.	Un-block supply plenum drain.
	Loose water hose connections.	Tighten connections.
	Water hose broken.	Replace cracked or broken hoses.
Unpleasant odour	Cooler located near source of unpleasant odour.	Remove source of odour or relocate cooler.
	Algae in tank water.	Drain pan, clean thoroughly with strong cleansing agent, refill, change pads. Clean or replace chlorinators.
	Pads remain wet after shut down.	Run fan on "vent" for 3 hours after cooling cycle to dry pads out.
	Heavy core deposits.	Replace cores.
Cooler cycles ON and OFF	Fault in the cooler.	Contact your Service Agent.
BMS Control not functioning	Fault in the building BMS or the MagIQtouch MS1 BMS controller	Refer to the building BMS system manual and/or the MagIQtouch MS1 BMS Installation and Operation manual supplied with the cooler, as appropriate.

APPENDICES

APPENDIX – A GENERIC STRUCTURALLY ENGINEERED ROOF MOUNTING SCHEMES:

GENERIC AIR CONDITIONING ROOF MOUNT

STRUCTURAL DWG INDEX

S01 - GENERAL NOTES 1
S02 - GENERAL NOTES 2
S03 - TIMBER TRUSS - 600mm SPACING
S04 - TIMBER TRUSS - 1200mm SPACING
S05 - STEEL TRUSS - 600mm SPACING
S06 - STEEL TRUSS - 1200mm SPACING
S07 - CONVENTIONAL ROOF FRAMING

GENERAL NOTES

G1 THESE DRAWINGS SHALL BE READ IN CONJUNCTION WITH ALL ENGINEER'S SOIL REPORT, ARCHITECTURAL AND OTHER CONSULTANTS DRAWINGS AND SPECIFICATIONS AND WRITTEN INSTRUCTIONS AS MAY BE ISSUED DURING THE COURSE OF THE CONTRACT.

G2 THESE DRAWINGS SHALL NOT BE USED FOR CONSTRUCTION UNTIL ISSUED AS "FOR CONSTRUCTION" BY THIS OFFICE.

G3 THE CONTRACTOR SHALL GIVE AT LEAST 1 WORKING DAY NOTICE FOR ALL ENGINEERING INSPECTIONS.

G4 ALL DIMENSIONS, LEVELS ETC. SHALL BE CONFIRMED FROM THE ARCHITECT'S DRAWINGS AND / OR CHECKED FROM THE JOB.

G5 IF ANY DISCREPANCY OCCURS ON THE ENGINEER'S DRAWINGS OR BETWEEN DRAWINGS AND THE SPECIFICATION, THE DISCREPANCY MUST BE REFERRED TO THE ENGINEER BEFORE PROCEEDING WITH THE WORK.

G6 ALL MATERIALS AND WORKMANSHIP SHALL BE IN ACCORDANCE WITH THE REQUIREMENTS OF THE CURRENT AUSTRALIAN STANDARDS CODES AND THE BY-LAWS AND ORDINANCES OF THE RELEVANT BUILDING AUTHORITY EXCEPT WHERE VARIED BY THE PROJECT SPECIFICATION.

G7 ALL DIMENSIONS SHOWN SHALL BE VERIFIED ON SITE. ENGINEER'S DRAWINGS MUST NOT BE SCALED.

G8 DURING CONSTRUCTION THE STRUCTURE SHALL BE MAINTAINED IN A STABLE CONDITION AND NO PART SHALL BE OVERSTRESSED.

G9 THE STRUCTURE HAS BEEN DESIGNED FOR THE FOLLOWING EARTHQUAKE PARAMETERS:

IMPORTANCE LEVEL	= DOMESTIC
PROBABILITY FACTOR (Kp)	= 1.0
HAZARD FACTOR (Z)	= 0.1

TIMBER NOTES

T1 ALL TIMBER WORK TO BE IN ACCORDANCE WITH AS 1720.1 AND 1684.2

T2 DURING CONSTRUCTION IT IS THE RESPONSIBILITY OF THE CONTRACTOR TO ENSURE THE TIMBER IS PROTECTED FROM THE WEATHER AND TIMBER STRENGTH IS NOT IMPAIRED IN ANY WAY.

T3 ALL TIMBER AT JOINTS SHALL BE FREE OF DEFECTS.

T4 ALL WORKMANSHIP AND MATERIALS SHALL BE IN ACCORDANCE WITH AS1720 AND AS1684.

T5 ABOVE GROUND EXTERNAL HARDWOOD TIMBER AND SOFTWOOD TIMBER SHALL BE TREATED TO LEVEL "H3" IN ACCORDANCE WITH AS1604 U.N.O.

T6 CONCEALED SOFTWOOD TIMBER SHALL BE TREATED TO LEVEL "H2-F" IN ACCORDANCE WITH AS1604 FOR TERMITE PROTECTION.

T7 EXTERNAL TIMBER SHALL BE KILN DRIED TO ACHIEVE A MOISTURE CONTENT NOT EXCEEDING 15%.

T8 HARDWOOD TIMBER SHALL BE MINIMUM F11 STRESS GRAD U.N.O SOFTWOOD TIMBER SHALL BE MGP10 U.N.O.

T9 ALL CUT SURFACES OF TREATED MEMBERS SHALL BE RE-TREATED ON SITE TO ACHIEVE ORIGINAL HAZARD CLASS, IN ACCORDANCE WITH AS1604.

T10 TIMBER EXPOSED TO VIEW SHALL BE DRESSED (PLANED ALL ROUND).

T11 EXTERNAL TIMBER IN BUSH FIRE ZONES MUST BE SEASONED HARDWOOD AS DEFINED IN AS1720.2, WITH A MINIMUM DENSITY OF 650Kg/m AT12% MOISTURE CONTENT AND COMPLY WITH THE SOUTH AUSTRALIAN HOUSING CODE.

T12 THE USE OF CCA TREATED TIMBER IN A SCHOOL ENVIRONMENT MAY BE RESTRICTED BY SOUTH AUSTRALIAN GOVERNMENT OR OTHER OHS&W POLICIES. THE CONTRACTOR IS RESPONSIBLE FOR COMPLIANCE WITH THESE POLICIES.

T13 PROPRIETARY TIMBER CONNECTORS SHALL BE INSTALLED IN ACCORDANCE WITH THE MANUFACTURER'S WRITTEN INSTRUCTIONS.

T14 ALL FASTENERS (SCREWS, BOLTS & BRACKETS) SHALL BE HOT DIPPED GALVANISED (NOT ZINC PLATED). FIXED IN ACCORDANCE WITH AS1720.1.

T15 BOLTED CONNECTIONS IN UNSEASONED TIMBER SHALL BE RE-TIGHTENED PRIOR TO THE FIXING OF CLADDING.

T16 ALL TIMBER SIZES, DETAILS, CONNECTIONS, TIE DOWNS AND BRACING SHALL BE IN ACCORDANCE WITH AS1684, NATIONAL TIMBER FRAMING CODE AND MANUFACTURER'S SPECIFICATIONS.

T17 THE BUILDING IS TO BE TERMITE TREATED TO THE REQUIREMENTS AND IN ACCORDANCE WITH AS3660 AND TO THE SPECIFICATIONS.

T18 ALL TYPE 17 SCREWS TO BE 12g 'BUGLE' SCREWS OR SIMILAR APPROVED (U.N.O.) LENGTH TO SUIT.

DESIGN CRITERIA & KEY ASSUMPTIONS

D1 EXISTING TRUSSES ARE ASSUMED TO BE AS PER TYPICAL LAYOUT SHOWN. OTHER SIZE TRUSSES ARE OUTSIDE OF THE SCOPE OF THIS GENERIC DESIGN.

D2 SPAN = 10.0m OR LESS. ANY SPANS OVER 10m ARE OUTSIDE GENERIC DESIGN BOUNDARIES AND A QUALIFIED ENGINEER SHOULD BE CONSULTED.

D3 PITCHES OF ROOF TO BE 15°, 22.5° AND 25°. ALTERNATE PITCHES BETWEEN 15° AND 25° ARE ADEQUATE. ANY PITCHES LESS THAN 15° OR GREATER THAN 25° ARE OUTSIDE GENERIC DESIGN BOUNDARIES AND A QUALIFIED ENGINEER SHOULD BE CONSULTED.

D4 IT IS RECOMMENDED THAT SEELEY INTERNATIONAL AIR CONDITIONING UNIT IS INSTALLED CLOSEST TO TRUSS TOP CHORD SUPPORTS AS POSSIBLE. I.E. ABOVE TRUSS DIAGONAL WEB.

D5 GENERIC SUPPORT FRAMES ARE DESIGNED FOR WIND CATEGORIES N1, N2 AND N3. REFER TO DETAILS FOR THE DIFFERENT WIND CATEGORIES. ANY WIND CATEGORIES OTHER THAN THE ABOVE ARE OUTSIDE GENERIC DESIGN BOUNDARIES AND A QUALIFIED ENGINEER SHOULD BE CONSULTED.

D6 EXISTING TRUSSES ARE ASSUMED TO BE IN GOOD CONDITION WITH NO SIGN OF DETERIORATION. PREFABRICATED TRUSSES EARLIER THAN 1997 WILL REQUIRE CONFIRMATION OF SUITABILITY IN ACCORDANCE WITH REGULATION 74 OF THE DEVELOPMENT REGULATION 2008.

D7 ADDITIONAL DEFLECTION OF TRUSSES SHOULD BE EXPECTED, HOWEVER THIS MAY BE MINIMAL AND ACCEPTABLE.

D8 TRUSS SPACING @ 600 CTRS IS ASSUMED TO SUPPORT A TILE ROOF. TRUSS SPACING @ 1200 CTRS IS ASSUMED TO SUPPORT A SHEET ROOF

D9 CUTTING OF ANY TRUSS MEMBERS IS NOT ALLOWED

D10 IF ANY DOUBT IN THE INSTALLATION OF DESIGN, PLEASE LIAISE WITH ENGINEER

D11 IF TRUSS LENGTH EXCEEDS 10m BUT HAS SUPPORTS REDUCING THE SPAN TO 10m OR LESS, GENERIC DESIGN IS STILL APPLICABLE.

D12 FROM MLEI ANALYSIS TIMBER TRUSSES SPACED AT 1200 CTS IN N3 WIND ZONE REQUIRE 90x35 MGP12 TOP CHORDS.

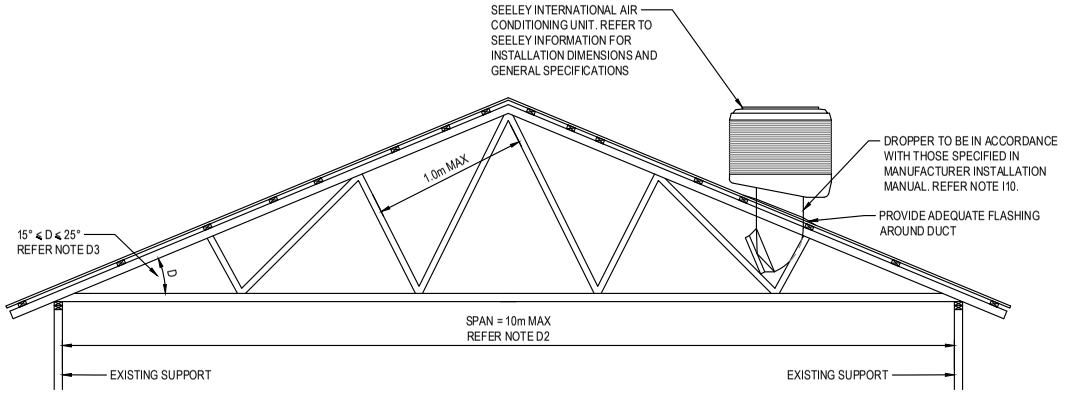

TYPICAL TRUSS LAYOUT

NOT TO SCALE

REVISION			
ISSUE	DATE	DESCRIPTION	INITIAL
C6	28.2.19	ISSUED FOR CERTIFICATION	HN
C7	28.3.19	ISSUED FOR CERTIFICATION	HN
C8	05.04.19	ISSUED FOR CERTIFICATION	TN

ISSUED FOR CERTIFICATION
NOT FOR CONSTRUCTION

mlei Consulting Engineers
TALENTED | APPROACHABLE | RESPONSIVE | PIONEERING
452 Pulteney Street, Adelaide SA 5000
Telephone (08) 8231 2832
Facsimile (08) 8311 1742
www.mlei.com.au

PROJECT: GENERIC AIR CONDITIONING ROOF MOUNT

CLIENT: SEELEY INTERNATIONAL

DRAWING TITLE: GENERAL NOTES 1

DO NOT SCALE FROM THIS DRAWING

DRAFTER	ENGINEER	MANAGER
PG	JT	TH

DATE	PROJECT NUMBER	DRAWING SCALE
Apr-19	2017-6648	NTS

DRAWING NUMBER	SHEET SIZE	REV
S01	A3	C8

APPENDICES

APPENDIX – A GENERIC STRUCTURALLY ENGINEERED ROOF MOUNTING SCHEMES:

SAFETY IN DESIGN NOTES

SID1 MLEI CONSULTING ENGINEERS HAVE CONDUCTED A PRELIMINARY SAFETY IN DESIGN REVIEW OF THE DESIGN ON THESE DRAWINGS. IT IS SUMMARIZED IN THE NOTES BELOW. THE REVIEW IS BASED GENERALLY ON THE PROCEDURE OUTLINED IN THE SAFE WORK AUSTRALIA PUBLICATION "SAFE DESIGN OF STRUCTURE CODE OF PRACTICE".

SID2 THE DESIGN HAS NOT BEEN REVIEWED WITH CONTRACTOR/BUILDER AT THE TIME OF ISSUE FOR TENDER OR CONSTRUCTION. CONSTRUCTION METHODS VARY BETWEEN CONTRACTORS, SO IT IS NOT POSSIBLE FOR MLEI CONSULTING ENGINEERS TO PERFORM AN EXHAUSTIVE SAFETY IN DESIGN OR SAFETY IN CONSTRUCTION REVIEW. ONCE APPOINTED, THE CONTRACTOR IS REQUIRED TO UNDERTAKE A THOROUGH REVIEW OF THE DESIGN WITH THEIR SUBCONTRACTORS TO IDENTIFY SAFETY RISKS DURING CONSTRUCTION AND DURING THE LIFE OF THE BUILDING.

SID3 THE SAFETY RISK MITIGATION ITEMS BELOW ARE BASED ON MLEI'S DESIGN OFFICE EXPERIENCE AND DO NOT NECESSARILY ACCOUNT FOR ALL CONSTRUCTION, OPERATION, MAINTENANCE AND DEMOLITION SAFETY RISKS BASED ON INFORMATION WHEN THIS DRAWING WAS MADE IN ITS CAPACITY AS DESIGNER ONLY. MLEI HAS TRIED TO IDENTIFY SAFETY RISKS PERTAINING TO CONSTRUCTION, OPERATION, MAINTENANCE AND DEMOLITION PHASES OF THE ASSET. INCLUSION (OR NOT) OF ANY ITEM DOES NOT REDUCE OR LIMIT OBLIGATIONS OF CONSTRUCTOR, USER, MAINTAINER AND DEMOLISHER TO UNDERTAKE APPROPRIATE RISK MANAGEMENT ACTIVITIES TO REDUCE RISK AND IS NOT AN ADMISSION BY MLEI THAT INCLUSION OF ANY ITEM IS THE DESIGNER'S RESPONSIBILITY.

SID4 CONSTRUCT BUILDING ELEMENTS THAT CONTRIBUTE TO SAFETY SUCH AS HAND RAILS AND TOE BOARDS, FALL ARREST SYSTEMS, etc. AS EARLY AS POSSIBLE.

SID5 PROVIDE SAFETY BARRIERS AT EDGES OF OPENINGS AND ELEVATED AREAS.

SID6 REVIEW ADEQUACY OF WORKING SPACE AVAILABLE FOR CONSTRUCTION ACTIVITIES. ENSURE SEPERATION OF PLANT AND PERSONNEL ON SITE, INCLUDING MOVEMENTS OF BOTH.

SID7 LOCATE LIFTING SLEW AND LAY DOWN AREAS AWAY FROM REGULAR CONSTRUCTION TRAFFIC.

SID8 ENSURE ISOLATION SAFE SYSTEMS OF WORK OR PROTECTIVE MEASURES ARE INSTALLED BEFORE WORKING NEAR LIVE ELECTRICAL INFRASTRUCTURE. PROVIDE PROTECTION OF ELECTRICAL OVERHEAD WIRING SYSTEMS DURING CONSTRUCTION.

SID9 PROVIDE ACCESS AND EGRESS TO EXCAVATIONS APPROPRIATE IN CASE AND INUNDATION, COLLAPSE OF ENGULFMENT.

SID10 LOCATE STOCKPILES AND HEAVY EQUIPMENT INCLUDING CRANES AWAY FROM BURIED SERVICES AND BUILDING BOUNDARIES WHERE ADJACENT BASEMENTS ARE PRESENT.

SID11 SEEK ADVICE FROM SUITABLY QUALIFIED GEOTECHNICAL OR STRUCTURAL ENGINEER PRIOR TO OPERATION OF HEAVY SURFACE PLANT AND EQUIPMENT OR STOCKPILING MATERIAL NEAR OPEN EXCAVATIONS OR EXISTING RETAINING STRUCTURES.

SID12 DO NOT STOCKPILE MATERIALS BEHIND OR EXCAVATE IN FRONT OF EXISTING RETAINING WALLS UNTIL WALL STABILITY HAS BEEN REVIEWED BY SUITABLY QUALIFIED STRUCTURAL ENGINEER.

SID13 HAVE LOAD CAPACITY OF STRUCTURES VERIFIED BY SUITABLY QUALIFIED STRUCTURAL ENGINEER BEFORE LOADING OF STRONG MATERIALS ON EXISTING OR PARTIALLY COMPLETED STRUCTURAL ELEMENTS.

SID14 SEEK ADVICE FROM SUITABLY QUALIFIED STRUCTURAL ENGINEER IF PLANNING CRANE LIFTS OR HOIST INSTALLATION OF PARTIALLY ERECTED OR SUSPENDED STRUCTURES.

SID15 HAVE SUITABLY QUALIFIED STRUCTURAL ENGINEER UNDERTAKE STRUCTURAL CHECK OF EXISTING CONCRETE, MASONRY AND STUD WALLS WHERE FIXINGS OR EQUIPMENT IS TO BE ATTACHED.

SID16 INSTRUCT SERVICES CONTRACTORS UNDER NO CIRCUMSTANCES CAN STRUCTURAL MEMBERS BE CUT, NOTCHED OR DRILLED TO ACCOMMODATE NEW SERVICES.

SID17 DO NOT CUT OR UNBOLT ANY STRUCTURAL MEMBERS WITHOUT SEEKING REVIEW BY SUITABLY QUALIFIED STRUCTURAL ENGINEER.

SID18 PROVIDE BUCKLING STABILITY TO LONG SPAN BEAMS, TRUSSES etc DURING ERECTION. IF UNSURE CHECK WITH SUITABLY QUALIFIED STRUCTURAL ENGINEER PRIOR TO LIFTING AND INSTALLATION.

SID19 MINIMIZE SITE BASED TREATMENTS (eg WELDING, CUTTING, SPRAY PAINTING, GRIT BLASTING, etc.). PROVIDE ADEQUATE PROTECTION, SCREENING AND VENTILATION TO MINIMIZE HAZARDS TO PERSONNEL IF SITE BASED TREATMENT IS UNAVOIDABLE.

SID20 TRY TO AVOID WORKING IN CONFINED SPACES. IF CONFINED SPACES WORK CAN'T BE AVOIDED, PROVIDE A SAFE WORK METHOD STATEMENT ADDRESSING MITIGATION OF RISKS. PROVIDE ADEQUATE SIGNAGE TO TEMPORARY AND PERMANENT CONFINED SPACES TO AS2865.

SID21 AVOID HOT WORKS ON SITE, PARTICULARLY IN TIMBER FRAMED STRUCTURES. HOT WORKS TO COMPLY WITH CLIENT PROCEDURES FOR APPLICATION "HOT WORKS PERMITS".

SID22 DETERMINE APPROPRIATE METHOD OF PAINT REMOVAL AND DISPOSAL BEFORE STRIPPING PAINT, PARTICULARLY ON HISTORIC STRUCTURES COATINGS CONTAINING COAL TAR EPOXIES, BITUMENS AND ASPHALTS, ZINC CHROMATE AND LEAD PRESENT A HEALTH RISK. PROVIDE SCREENING TO PUBLIC AND ENVIRONMENT FOR PAINT REMOVAL AND CLEANING OPERATIONS. USE ENVIRONMENTALLY APPROPRIATE RESTORATION METHODS DURING MAINTENANCE AND REPAIR WORK.

SID23 MAKE WORK AREAS SAFE WHERE STRUCTURAL ELEMENTS ARE DAMAGED, CRACKED OR HAVE SUFFERED SIGNIFICANT SECTION LOSS BEFORE ALLOWING GENERAL CONSTRUCTION OR REPAIR ACCESS.

SID24 REPORT SIGNIFICANT SECTION LOSS OR CORROSION FLAKING BEFORE STARTING PAINTING OR REPAIRS. CONSULT SUITABLY QUALIFIED STRUCTURAL ENGINEER IF SECTION LOSS OR EXTENSIVE CORROSION FLAKING PRESENT BEFORE PROCEEDING WITH WORK.

SID25 DEVELOP AND IMPLEMENT RISK MITIGATION STRATEGIES BEFORE ALLOWING ACCESS OVER SUSPENDED CLADDING FINISHES THAT MAY BECOME BRITTLE OVER TIME.

SID26 REPORT LOOSE OR MISSING BOLTS etc. IN CONNECTIONS ENCOUNTERED DURING DAY TO DAY OPERATIONS.

SID27 REMOVE MATERIAL FROM STORAGE STRUCTURES BEFORE UNDERTAKING MAINTENANCE WORKS.

SID28 THIS DRAWING IS OWNED BY, AND REMAINS THE PROPERTY OF MLEI CONSULTING ENGINEERS . REPRODUCTION OR USE OF THIS DRAWING WITHOUT PERMISSION IS ILLEGAL.THE CLIENT IS LICENSED TO USE THIS DRAWING FOR THE WORKS SPECIFICATION THIS SITE.

RECOMMENDED INSTRUCTIONS TO INSTALLER

I1 EXISTING TRUSSES & ROOF FRAMING TO BE INSPECTED THOROUGHLY BEFORE BEGINNING ANY WORKS.

I2 NOTE ANY NOTICEABLE DEFLECTION OR DETERIORATION OF EXISTING TRUSS OR ROOF MEMBERS.

I3 ONCE EXISTING FRAMING HAS BEEN DEEMED IN ADEQUATE CONDITION AND IS WITHIN THE REQUIREMENTS OF THIS GENERIC DESIGN, INSTALLATION MAY BEGIN.

I4 INSTALL AIR CONDITIONING UNIT AND ADDITIONAL STRUCTURE AS PER DESIGN.

I5 ANY PROPRIETARY PRODUCTS ARE TO BE INSTALLED STRICTLY IN ACCORDANCE WITH MANUFACTURER'S SPECIFICATION.

I6 REFER TO SAFETY IN DESIGN NOTES FOR POTENTIAL RISKS AND MITIGATION TECHNIQUES

I7 IF INSTALLATION REQUIRES A WORKING PLATFORM, CONSULT ENGINEER AS NECESSARY.

I8 INSTALL ALL STRENGTHENING MEMBERS AND TRIMMERS BEFORE THE AIR CONDITIONING UNIT.

I9 ONCE INSTALLATION IS COMPLETE, ENSURE WORK SITE IS LEFT AS IT WAS FOUND.

I10 DROPPER TO BE IN ACCORDANCE WITH THOSE SPECIFIED IN MANUFACTURER INSTALLATION MANUAL - NOT DESIGNED/VERIFIED BY MLEI.

REVISION

ISSUE	DATE	DESCRIPTION	INITIAL
C6	27.2.19	ISSUED FOR CERTIFICATION	HN
C7	28.3.19	ISSUED FOR CERTIFICATION	HN
C8	05.04.19	ISSUED FOR CERTIFICATION	TN

ISSUED FOR CERTIFICATION
NOT FOR CONSTRUCTION

mlei Consulting Engineers
TALENTED | APPROACHABLE | RESPONSIVE | PIONEERING
452 Pulteney Street, Adelaide SA 5000
Telephone (08) 8231 2832
Facsimile (08) 8311 1742
www.mlei.com.au

PROJECT
GENERIC AIR CONDITIONING ROOF MOUNT

CLIENT
SEELEY INTERNATIONAL

DRAWING TITLE
GENERAL NOTES 2

DO NOT SCALE FROM THIS DRAWING

DRAFTER	ENGINEER	MANAGER
PG	JT	TH

DATE	PROJECT NUMBER	DRAWING SCALE
Apr-19	2017-6648	NTS

DRAWING NUMBER	SHEET SIZE	REV
S02	A3	C8

APPENDICES

APPENDIX – A GENERIC STRUCTURALLY ENGINEERED ROOF MOUNTING SCHEMES:

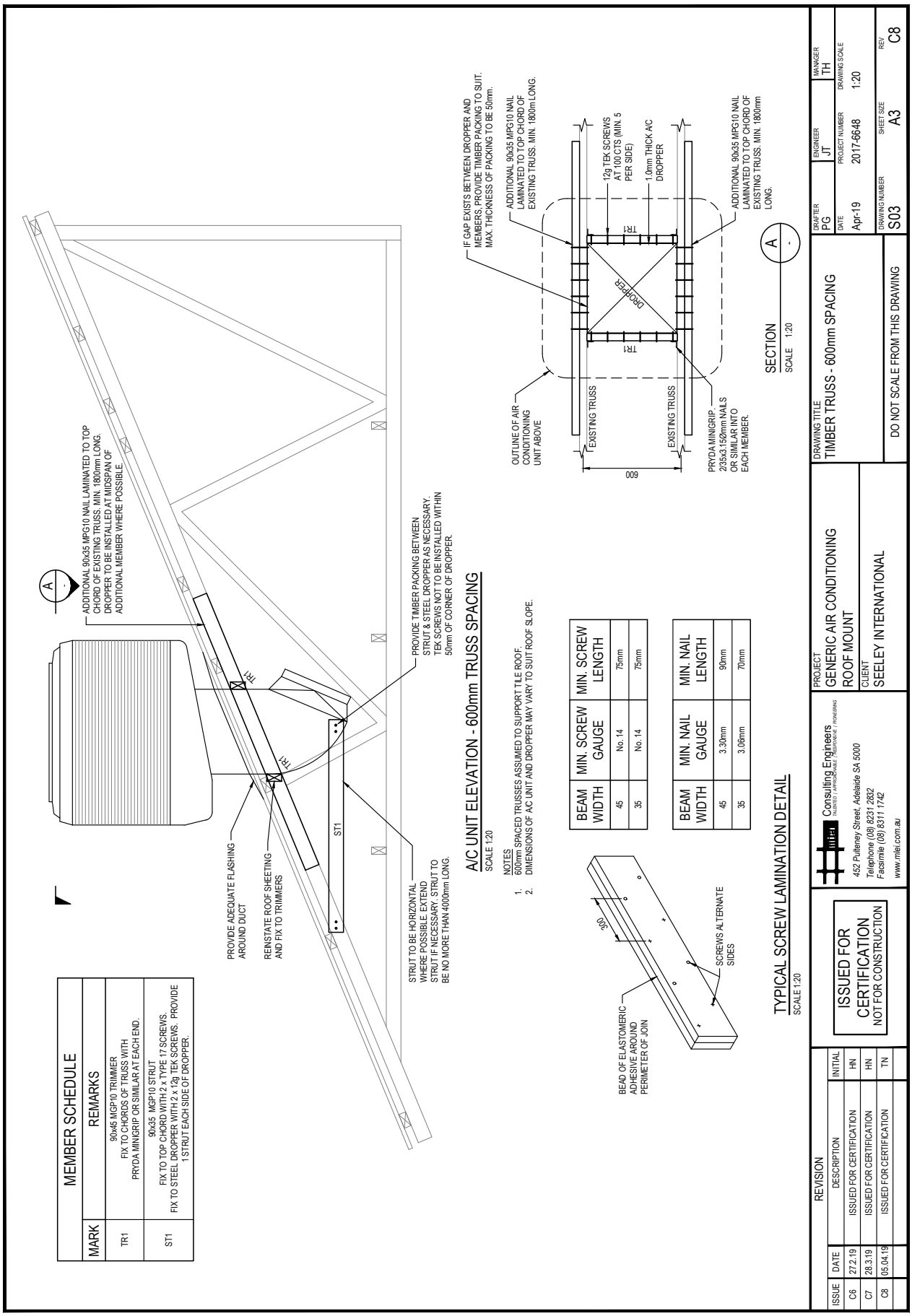

APPENDICES

APPENDIX – A GENERIC STRUCTURALLY ENGINEERED ROOF MOUNTING SCHEMES:

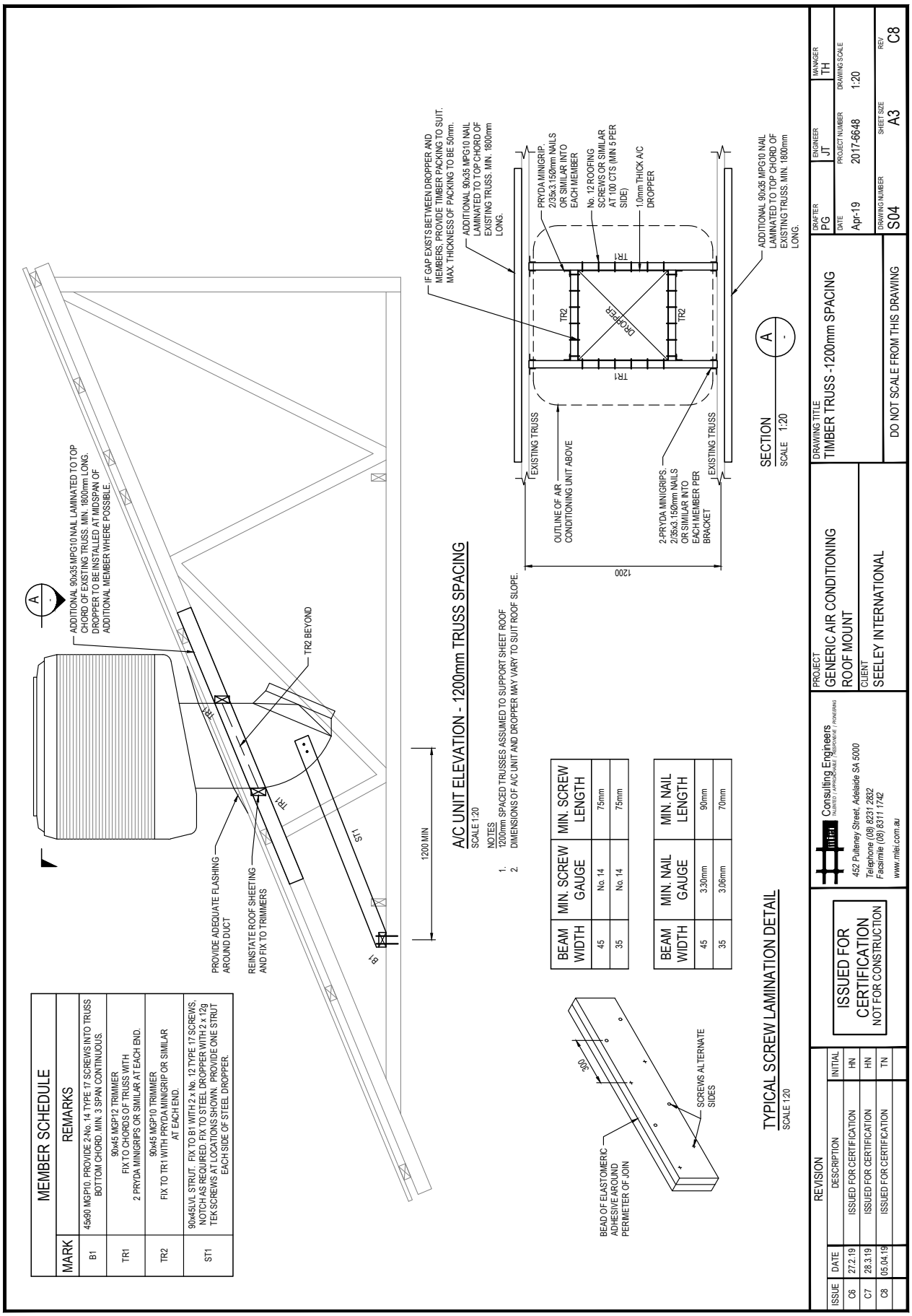

APPENDICES

APPENDIX – A GENERIC STRUCTURALLY ENGINEERED ROOF MOUNTING SCHEMES:

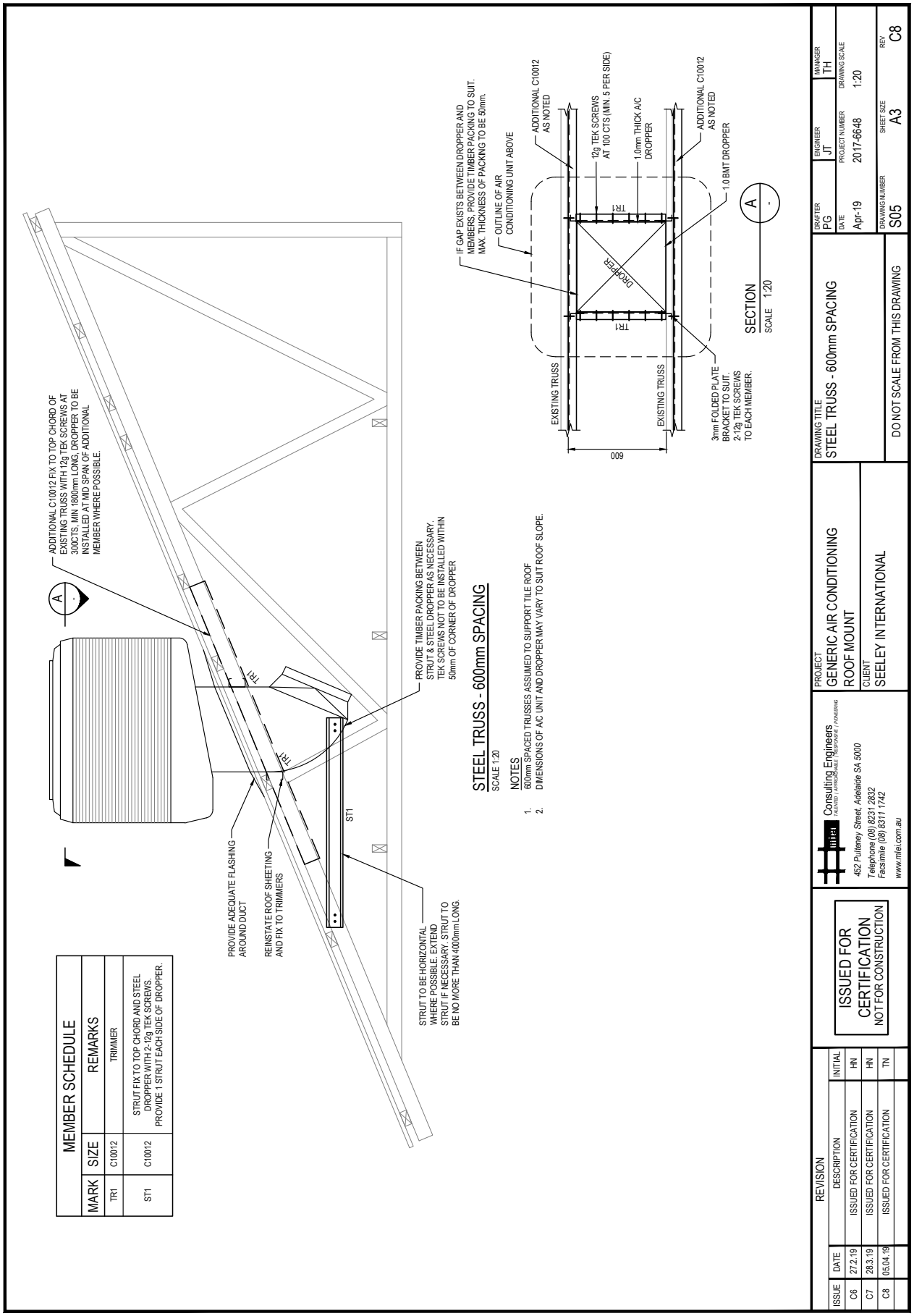

APPENDICES

APPENDIX – A GENERIC STRUCTURALLY ENGINEERED ROOF MOUNTING SCHEMES:

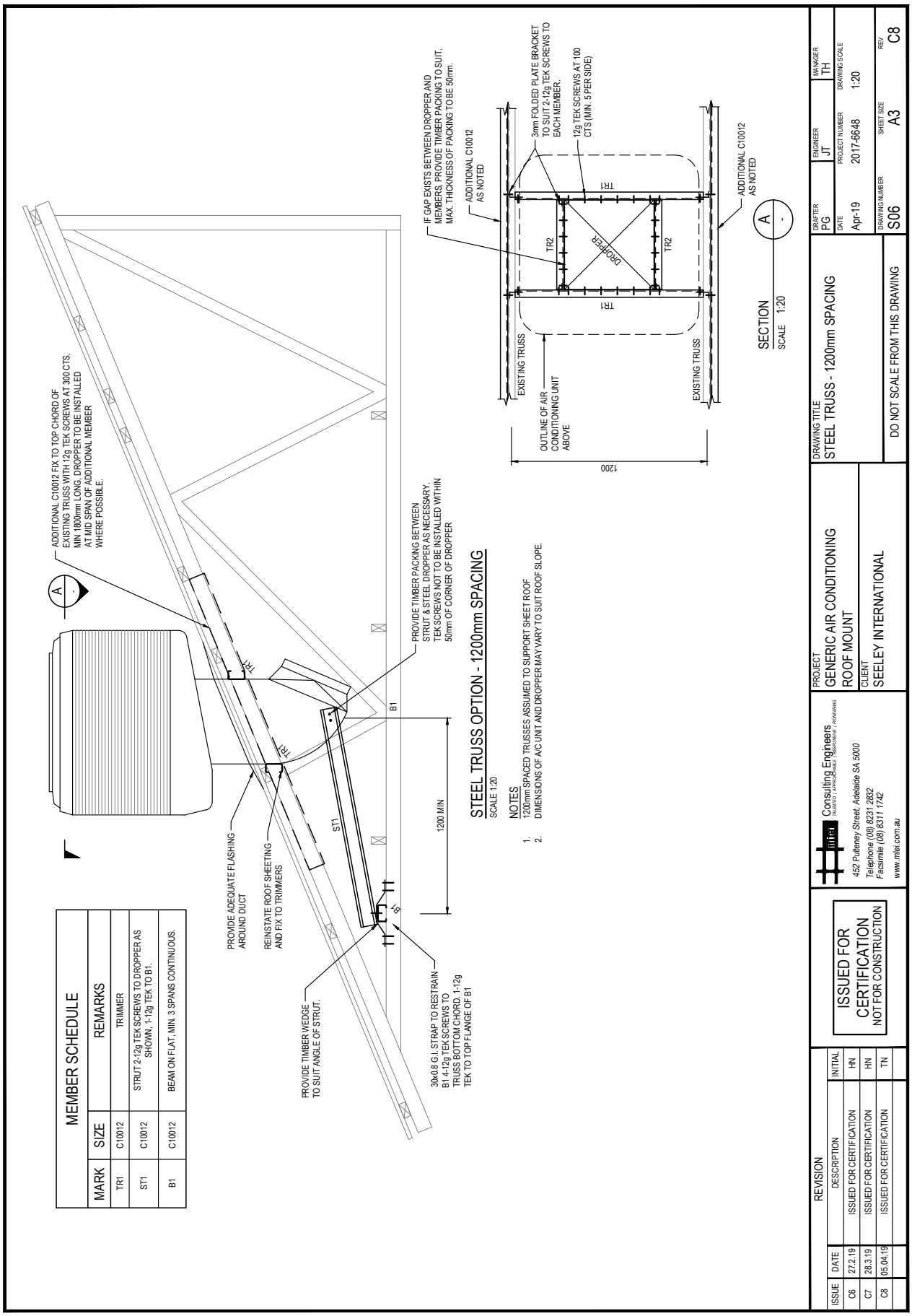

APPENDICES

APPENDIX – A GENERIC STRUCTURALLY ENGINEERED ROOF MOUNTING SCHEMES:

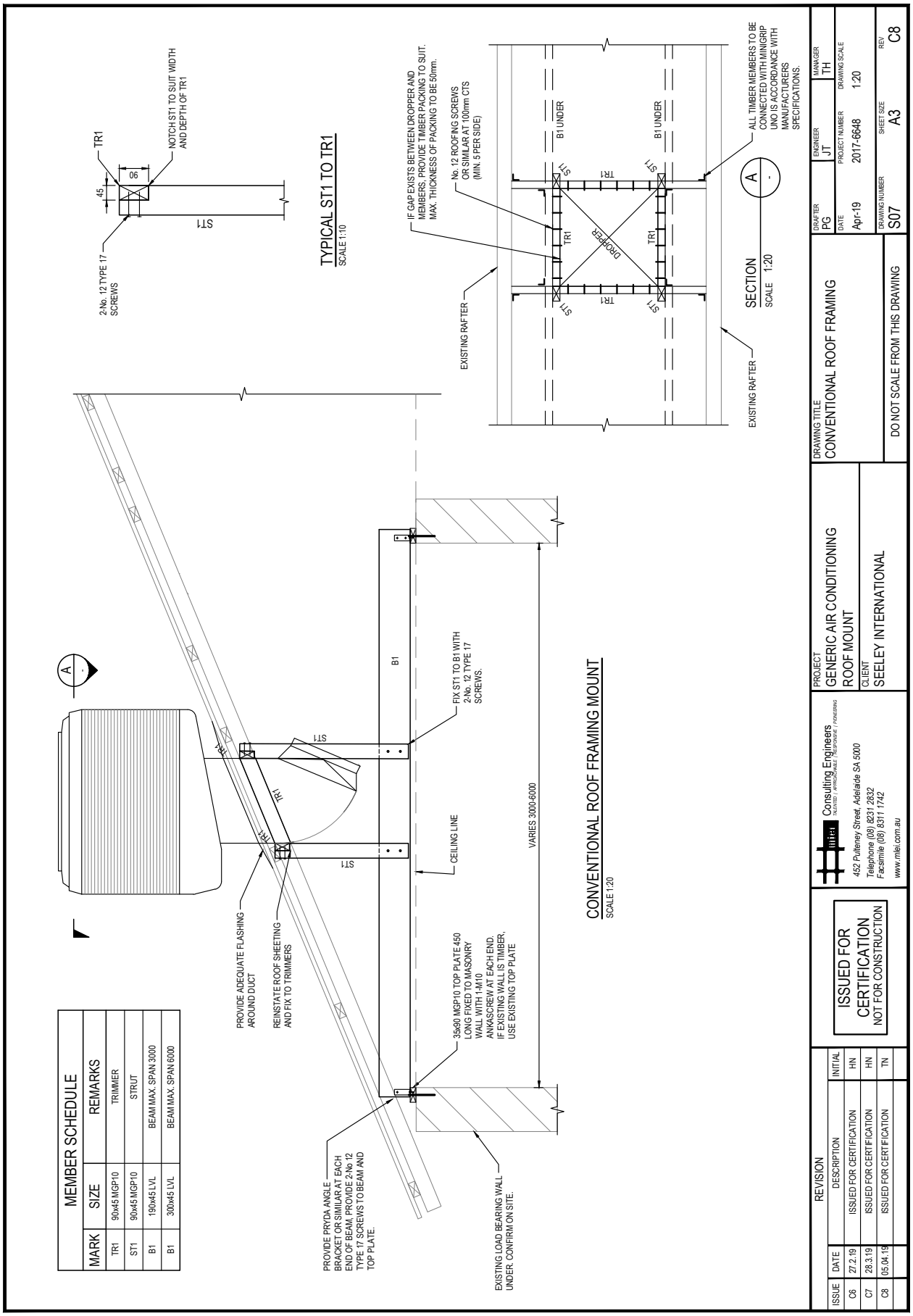

APPENDICES

APPENDIX – B 'PIECE BY PIECE' INSTALLATION

The 'piece by piece' installation method should be employed as a secondary option when installation by crane is too difficult or not feasible.

Important! If using this method, it is imperative that the disassembly and reassembly instructions are followed carefully. If the cooler is not correctly reassembled, the customer may experience a performance penalty in terms of cooling capacity and cooling effectiveness. It is the installer's responsibility to ensure that the cooler is reassembled correctly according to the following instructions. During disassembly/reassembly, be vigilant and ensure all fasteners and small components are stored in containers for safe keeping.

Initial disassembly on the ground:

1. Remove the plastic packaging film from the cooler, along with the vertical wooden support members for transport. Dispose of each responsibly.
2. Remove all 8 side panel clips, all 4 top clips and all 4 side panel assemblies. This will require a flat head screw driver. Store the clips in a container.

ILL2788-A

3. Remove the lid grille by loosening all 8 of the encapsulated wing nut lid screws and then lifting the lid upwards. The lid screws are encapsulated and should not separate from the lid if untightened uniformly.

ILL2788-A

4A. Unclip the spreader hoses and then pull and release the top manifold retention straps.

ILL3032-A

ILL3033-A

4B. Release the bottom manifold retention straps.

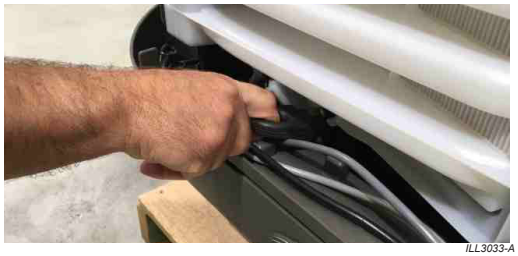

ILL3033-A

4C. The manifold assembly can now be pulled directly outwards.

ILL3034-A

4D. Cooler with manifolds removed.

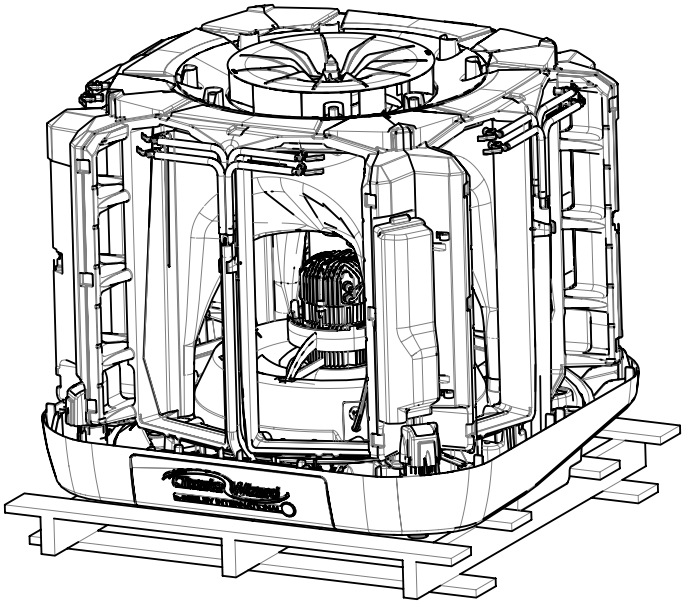

ILL3130-A

APPENDICES

APPENDIX – B ‘PIECE BY PIECE’ INSTALLATION

Removing the Top Motor/Fan Assembly:

5A. The cooler electronics enclosure is located between the front and RHS side panels.

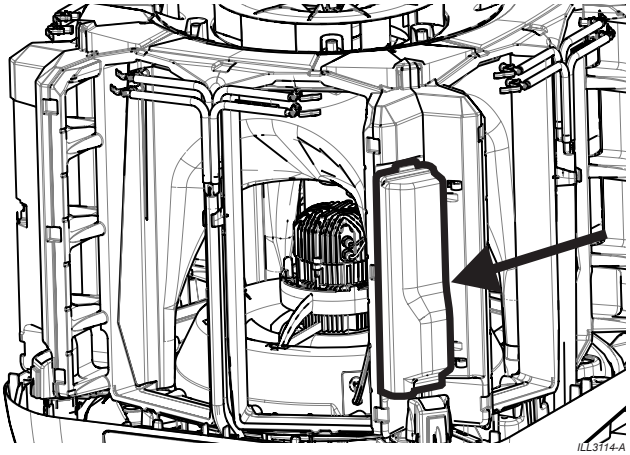

ILL3114-A

Disconnect the exhaust motor communications and power and remove all cables from the cable holders (holding the exhaust motor and pump cables).

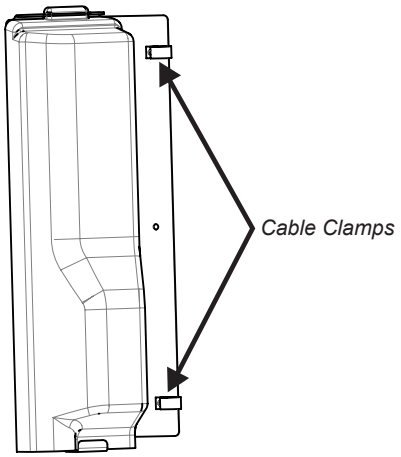

ILL3117-A

Remove the electronics enclosure splash cover.

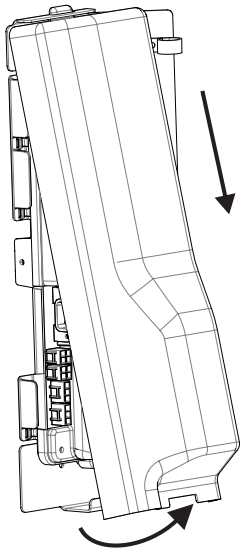

Unclip the bottom tab.

Swing the cover out from the bottom, then pull the cover down to disengage the top tab from the mount bracket slot.

ILL3132-A

5B. Disconnect the cables labelled ‘Top Motor’ and ‘Top Motor Signal’ from the control board **ONLY.**

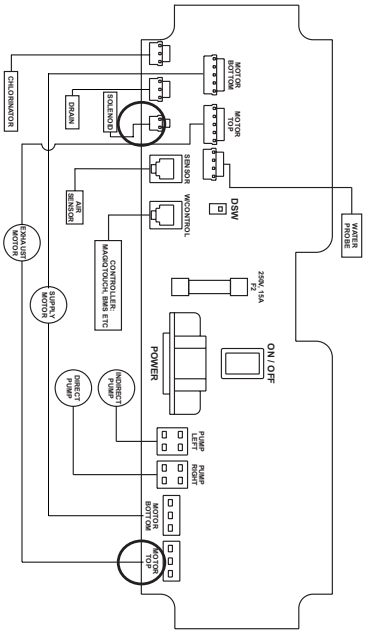

ILL2681-B

5C. Remove any cable ties above the enclosure to free the 2 cables to the top exhaust motor then free these cables. Remove the single centre screw holding the electronics enclosure to the mount plate.

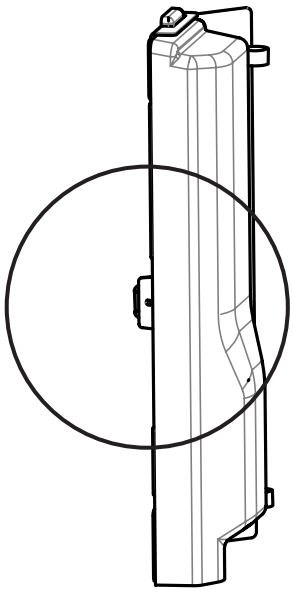

ILL3118-A

Leave any remaining wires and hoses connected within the electronics enclosure. Rest the electronics enclosure on the tank in a drained and dry position.

APPENDICES

APPENDIX – B ‘PIECE BY PIECE’ INSTALLATION

6. If you have successfully freed the top motor cables, you will be able to lift the top motor/fan assembly out from the top of the cooler by lifting it up vertically.

ILL2797-A

Important! This assembly weighs approx. 22kg. Use the appropriate mechanical aids and lifting technique to avoid injury. Set this assembly aside.

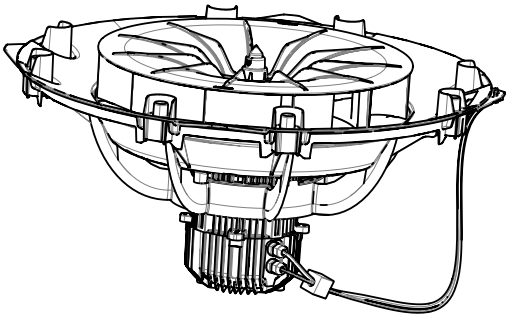

ILL3120-A

Cooler with Exhaust Venturi assembly removed.

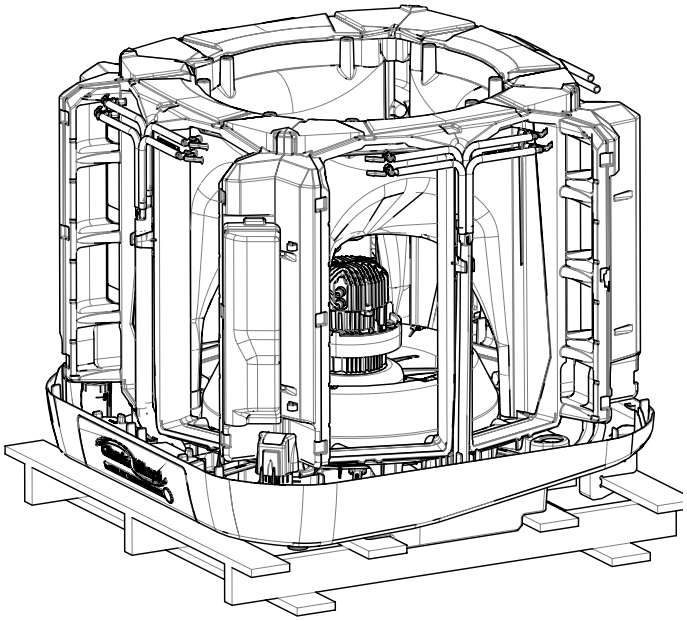

ILL3115-A

Removing the plenum assembly:

7. Reach in to the supply chamber of the cooler and cut the cable tie that is loosely constraining the cables to the inner plenum.

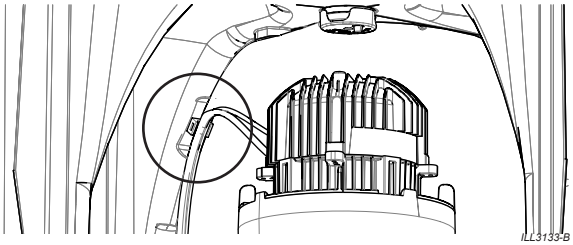

ILL3133-B

8. Remove the vertical hose pillars from the hose restraints on all 4 sides and let them hang freely.

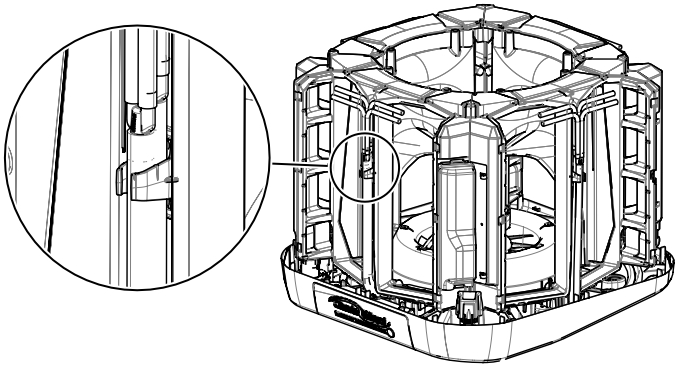

ILL3121-A

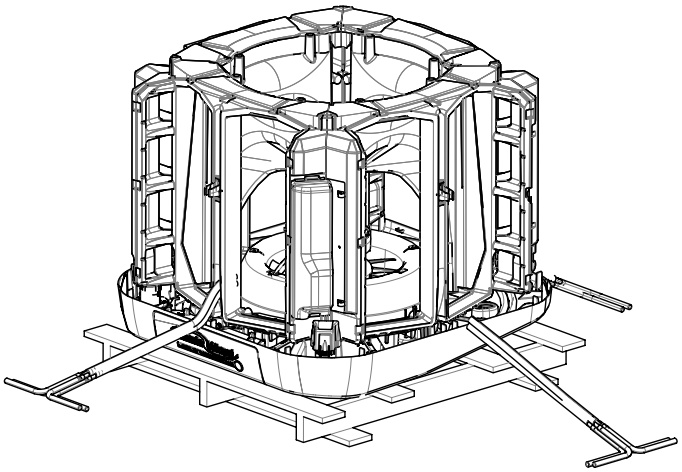

ILL3122-A

APPENDICES

APPENDIX – B ‘PIECE BY PIECE’ INSTALLATION

9. There is an opening at the bottom of the foam plenums which will allow hand access to the clips which are holding the inner plenum to the supply venturi assembly. These need to be unclipped on all 4 sides to free the plenum assembly. Reach in and pull the clip backwards towards you then carefully pop the plenum up. Repeat this on all four corners until the plenum pops up freely.

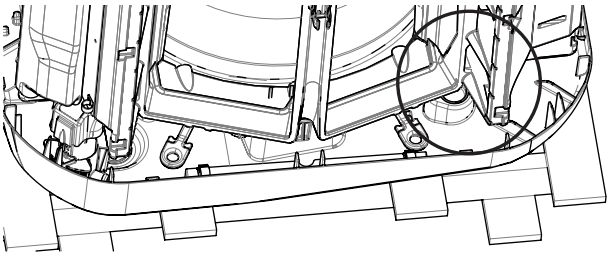

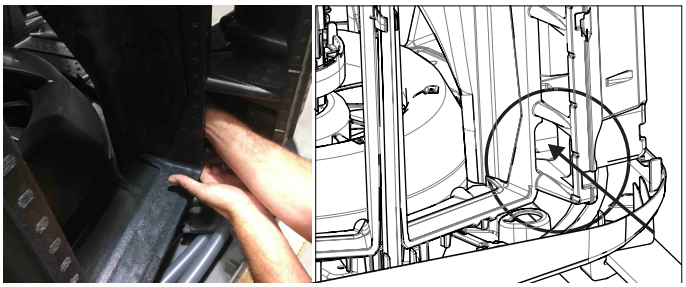

ILL3123-A

Lift the assembly up and set aside. Do not disassemble the foam from the inner plenum.

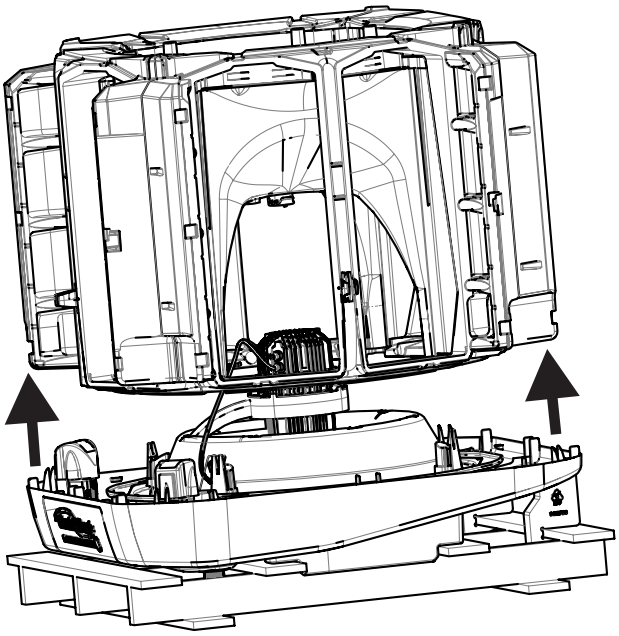

ILL3124-A

10. Reposition the vertical hose pillars so that they are resting inside of the tank where they are out of the way.

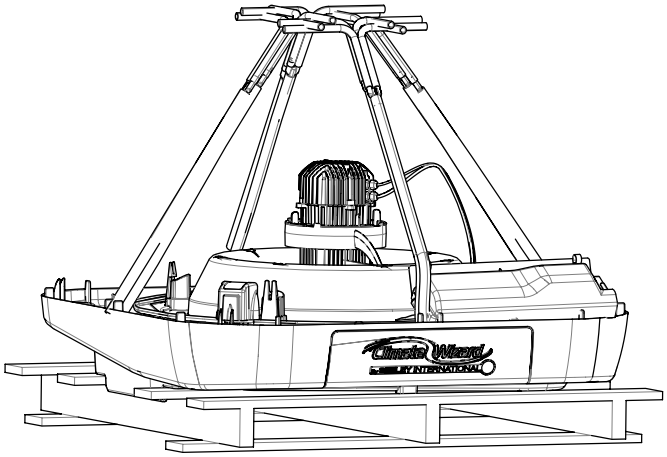

ILL2801-B

COOLER READY TO LIFT. DO NOT BREAK DOWN ANY FURTHER.

Transporting the cooler to the roof:

Caution! Do not take risks when raising the cooler to the roof for installation. Use safety equipment, appropriate procedures and always have assistance. It is recommended that at least 2 people transport the cooler components onto the roof. Ensure the cooler is in the specified state of disassembly before transporting.

ILL3332-A

APPENDICES

APPENDIX – B ‘PIECE BY PIECE’ INSTALLATION

11. Begin by securing the hoses, mains and communication cables in the tank with some duct tape to prevent the hose circuits becoming tangled and dislodged whilst lifting.
12. Attach ropes or slings through the central tank hole. Do not drop the cooler. Always handle the cooler with care. If you intend to pull the cooler onto the roof using a ladder as a slide, then guide the cooler on the underside of the tank. **Important!** This assembly is bulky and weighs approx. 35kg.
13. With a minimum of two persons, transport the bottom half of the cooler to the roof.

Important! It is best to leave all other components and assemblies on the ground until they are required in order to avoid injury and to prevent damage to the components.

Mounting cooler to the dropper:

14. Once on the roof, carefully position the tank onto the transition. Ensure the communication cable has been routed down through the dropper for later connection.

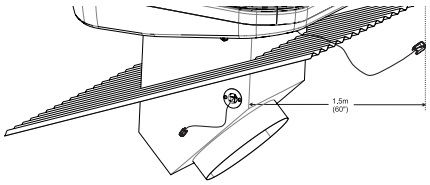

ILL3029-B

When installed correctly, the branding on the front of the cooler should be positioned toward the front of the dropper such that it can be directly seen from the ground (as shown). The tank should also match the profile of the roof. That is, the base of the tank should fall in the same direction as the roof, from a side view.

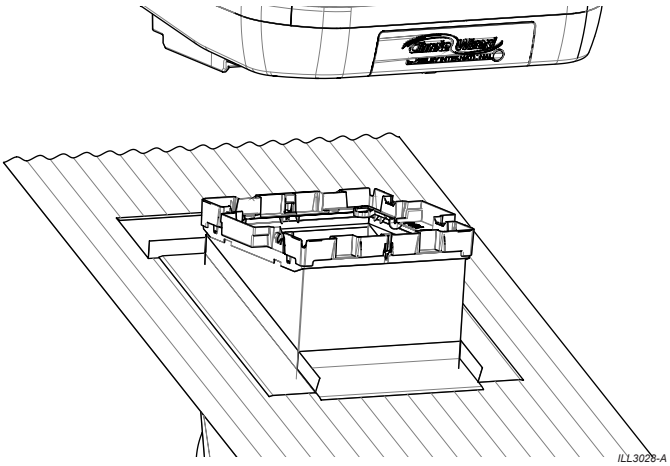

ILL3028-A

15. When placing the tank on the transition, the dropper transition straps should clear the edges of the dropper transition and need to be guided onto the outside surface of the transition and the dropper when the cooler is being lowered. Be extremely careful not to damage the transition straps during this process.

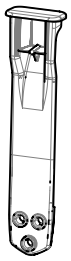

ILL3030-A

Transition Straps

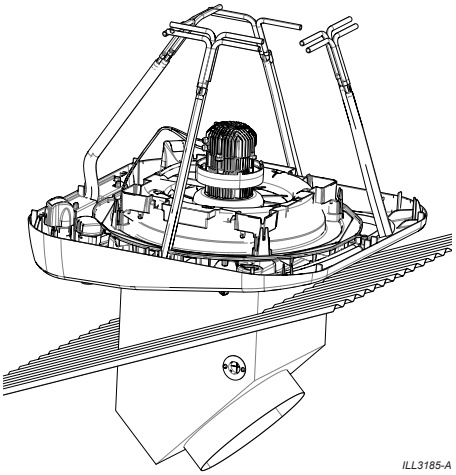

ILL3185-A

Fit the mains power cable once the tank assembly is positioned on the transition/dropper assembly. The socket end of the mains power cable must also be installed. This is located (and restrained) within the tank of the cooler. Pass the power socket end of the mains cable through the rear access hole (RHS) in the tank and then pull the remainder of unrestrained mains cable through such that it protrudes out of the underside of the tank.
To fit, lift the rear corner of the tank and guide the mains cable through the corner recess slot in the transition. Ensure the cable is not pinched or trapped between the tank and transition/dropper assembly. Once this is complete, lower the cooler and recheck to ensure the cables are not being pinched or crushed.

16. Once the tank is on the transition, check to make sure that the dropper transitions straps are at full extension. The straps should be protruding out from the tank as shown. To ensure they are fully extended, use a small screwdriver to pull them downwards.

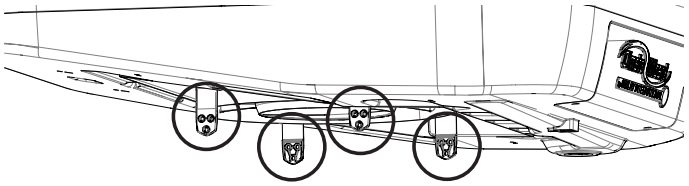

ILL3125-A

17. Align the dropper transition straps with the pre-drilled holes in the dropper/T-washers. A small screwdriver may be required again to bring the holes into alignment.
18. Begin securing the tank to the dropper using the TEK screws provided. There are twelve (12) screws in total. Only use the screws provided. If an alternative screw is used, ensure it is of the same specification (Screw TEK, Hex, Steel, 12 Gauge, 30-35mm x 14TPI, Category 3-5 (Depending on local regulations), No seal).

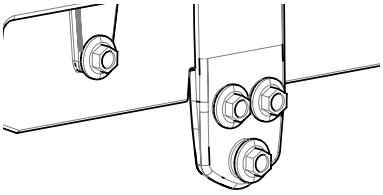

ILL2787-A

19. Once the transition straps have been secured to the dropper, the tank assembly installation is complete.

APPENDICES

APPENDIX – B ‘PIECE BY PIECE’ INSTALLATION

Reassembly of the Cooler

Important! Carefully follow steps 21 to 42 in order to correctly reassemble the cooler.

20. Install the drain valve. Refer “INSTALLING THE DRAIN VALVE” on page 20

21. Transport the plenum assembly to the roof and then connect it to the supply venturi assembly on the dropper. There are 4 female clips on the legs of the plenum assembly which engage with the 4 male clips on the supply venturi. The male clip closest to the drain valve is keyed and will only engage when the plenum assembly is orientated correctly. **Important!** Be sure to be careful with the clips! Make sure they are properly aligned before attempting to engage. Do not force the clips! Excessive force may cause them to break.

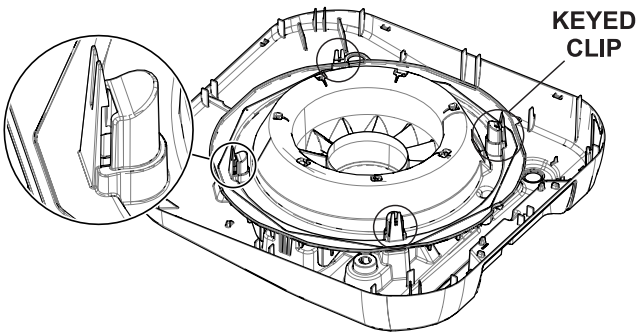

ILL3126-A

22. **Important! Check to make sure that the foam plenums are firmly and correctly fitted to the plenum inner as this forms a sealing face.**

    Reinstall electronics enclosure in its original position and secure with the clips and screw.

23. Transport the top motor/fan assembly to the roof. **Important!** This assembly is bulky and weighs 22kg. Use the appropriate mechanical aids and lifting technique to avoid injury.

    The assembly is keyed to ensure the motor cable exits to the correct orientation in the cooler.

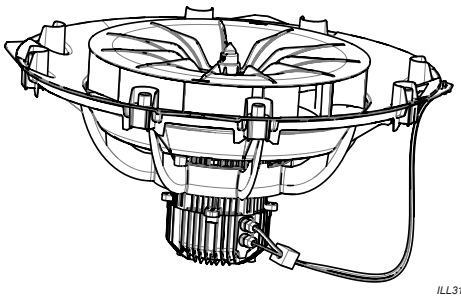

ILL3120-A

24. Install top motor/fan assembly to the top of the plenum in reverse order of that specified in step 5. Ensure cables are oriented towards the electronics enclosure location and re-secure cables using cable ties. Lift the top fan assembly up and locate the assembly onto the plenum spigots.

25. Be sure to direct the motor cables through the gap in the foam plenum. Ensure the top motor/fan assembly forms a good seal with the foam and that the cables are sitting in their dedicated slots.

ILL2810-A

26. There should be no gap between the foam and top fan assembly.

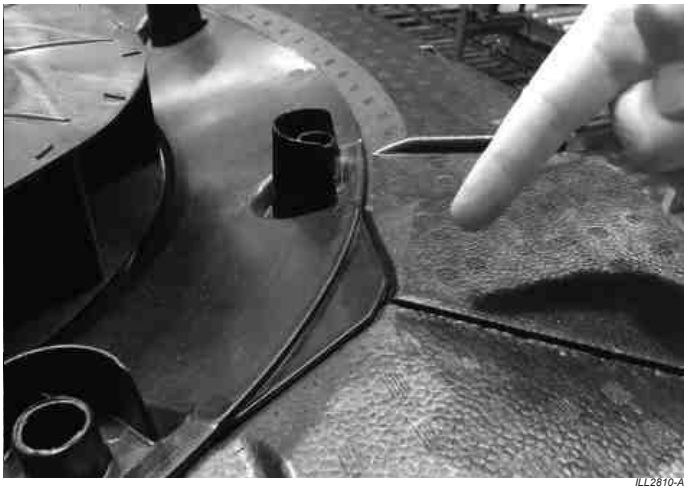

ILL2810-A

27. Switch isolator on the electronics enclosure to the “ON” position when ready. Clip the electronics cover back in place.

28. When cooler operation has been verified, carefully transport side panels with filters to cooler location and attach them to cooler in reverse of disassembly process. Re-fit clips to secure side panels

APPENDICES

APPENDIX – B ‘PIECE BY PIECE’ INSTALLATION

29. Route the top motor cables down to the electronics enclosure via the cable restraint built into the foam plenum that is closest to the drain valve (i.e. the right hand side foam plenum when facing the front of the cooler). Reconnect the cables according to the corresponding labels. Refer to the wiring diagram shown in Step 5, “Removing the Top Motor/Fan Assembly:” on page 38.

30. Reinstall all 8 manifold retention straps onto the top motor/fan assembly. Slide the ring end over the spigot. Stretch the strap so that the head of the strap pulls back against the manifold to retain it.

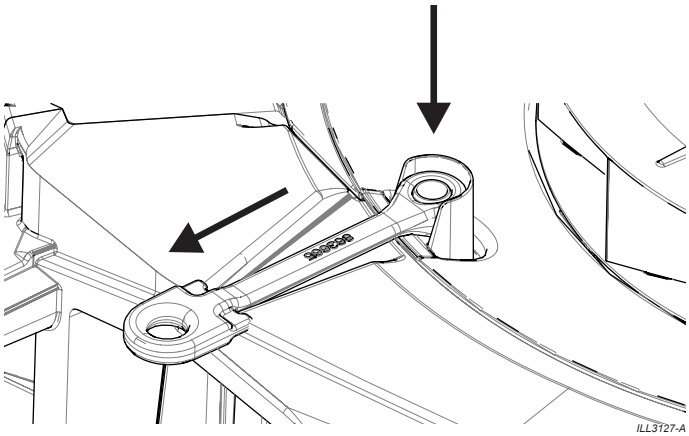

31. Loosely constrain the cables in the plenum area to the cable tie mount on the plenum. **Important! Do not overtighten. Do not choke the pressure sensor hoses.**

32. Adjust the cable routing runs and neaten up the cable runs in the tank. Re-fit cable ties to constrain the cables such that they are suspended above the water.

33. Refit the electronics cable cover and screw to the plenum.

    Refer to “Removing the Top Motor/Fan Assembly:” on page 38

34. Transport all 8 manifold assemblies to the roof and fit to the cooler. To do this, carefully slide the manifolds into the plenum outer ensuring a tight fit with no gaps between the interfacing surfaces. All manifold assemblies should mate firmly with the plenum outer to form a good sealing face. Handle the manifolds with care. Excessive force may damage the foam and/or manifold assembly.

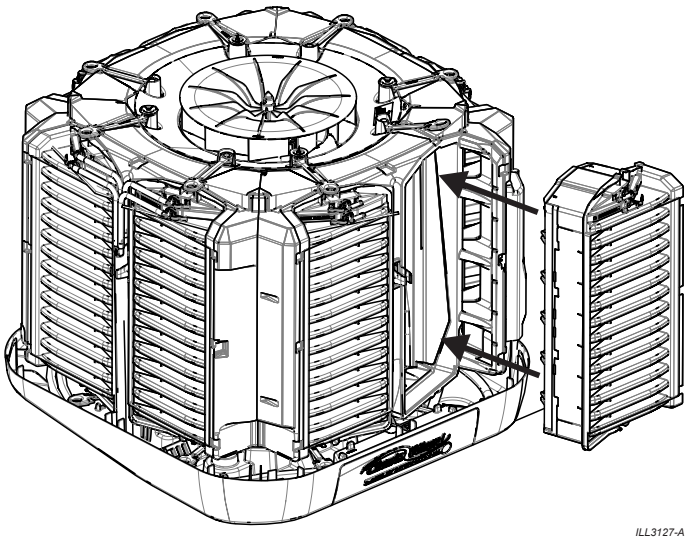

35. Secure the manifold assemblies by pulling and locking the lower and upper manifold retention straps into the dedicated slots on the manifolds.

36. Reconnect the vertical hose pillars to the hose restraint clips on the foam plenums.

APPENDIX – B 'PIECE BY PIECE' INSTALLATION

37. Plumb and connect all hoses to the manifold assemblies as shown. Inner hoses (grey) are to be connected to the upper manifold connection point. Outer hoses (blue) are to be connected to the lower manifold connection point. **Important! It is imperative that the water distribution hoses are connected correctly.**

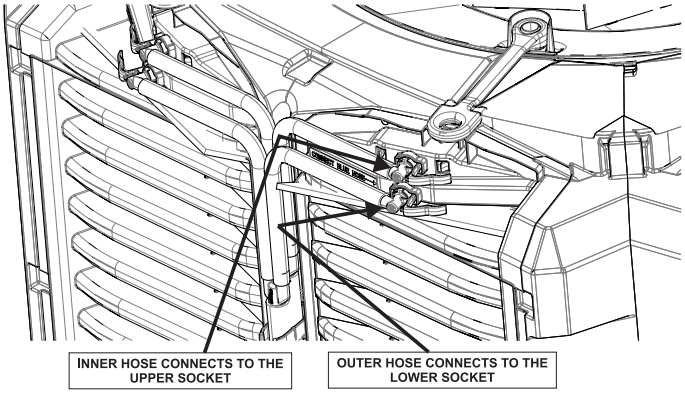

ILL2816-A

38. Transport the lid to the roof and reinstall. Tighten all 8 lid screws uniformly and adequately.

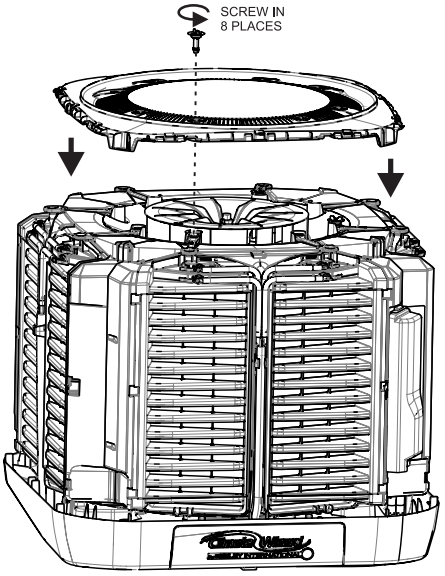

ILL2817-A

39. Transport the side panel assemblies to the roof. To reinstall all 4 side panel assemblies, rest the bottom lip of the side panel on the tank guide ribs and engage the clips on an angle as shown. Mate the top edge of the side panel with the lid and press fit along the top surface. The panel will lock into place with the lid. For installation of successive side panels, ensure side ribs are neatly interfacing. These can be pressed in with moderate force.

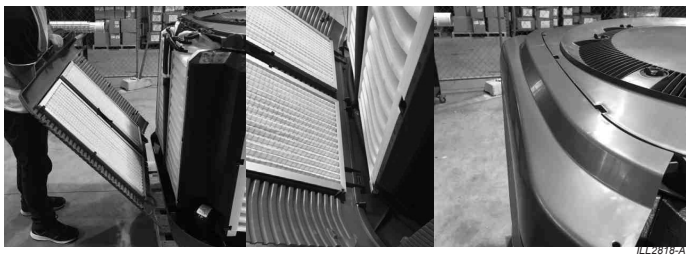

ILL2818-A

40. Once all 4 side panels are fitted, refit all 8 side clips and all 4 top clips.

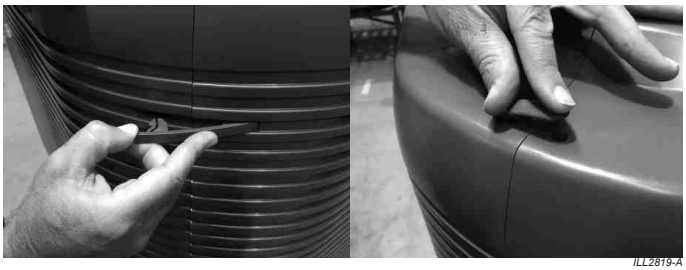

ILL2819-A

PRELIMINARY CABLE INSTALLATION

Your installation kit includes a control cable. It also includes a Heat/Cool Duct Switch module which requires a separate mains socket outlet. This outlet is best located near the socket outlet supplying power to the installed gas heater, as the Heat/Cool Duct Switch needs to be within 20 metres of the heater because of the communications cables.

For Australia Only

The control cable will be routed through the corner recess slot in the transition (as shown below) by the installer. **This cable must be routed through this corner recess prior to the cooler being mounted to the dropper.**

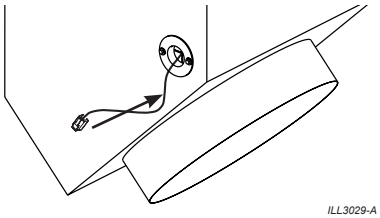

ILL3029-A

UTILITY CONNECTIONS - MAINS CABLE INSTALLATION

This step leads on from the 'Preliminary Cable Installation' section, refer to "PRELIMINARY CABLE INSTALLATION" on page 15. refer "MAINS AND COMMUNICATION CABLE PATH" on page 21

ELECTRICAL REQUIREMENTS

Refer to information provided: "ELECTRICAL REQUIREMENTS" on page 19.

WATER REQUIREMENTS

Refer to information provided: "WATER REQUIREMENTS" on page 19.

INSTALLING THE DRAIN VALVE

Refer to information provided: "INSTALLING THE DRAIN VALVE" on page 20.

CONNECTION TO MAINS WATER

Refer to information provided: "CONNECTION TO MAINS WATER" on page 20.

NOTES

Service - All regions: Please contact your local distributor.

seeleyinternational.com

MANUFACTURED BY: SEELEY INTERNATIONAL PTY LTD
112 O'SULLIVAN BEACH RD, LONSDALE SA, 5160. AUSTRALIA

IMPORTED BY: SEELEY INTERNATIONAL (EUROPE) LTD
UNIT 11 BYRON BUSINESS CENTRE DUKE STREET HUCKNALL,
NOTTINGHAM, NG15 7HP UNITED KINGDOM

SEELEY INTERNATIONAL (AMERICAS) LTD
1002 S 56TH AVENUE, SUITE # 101
PHOENIX, ARIZONA 85043, USA

SEELEY INTERNATIONAL (AFRICA) PTY LTD
6 WITTON ROAD, FOUNDERSVIEW SOUTH,
MODDERFONTEIN 1609, GAUTENG, SOUTH AFRICA

It is the policy of Seeley International to introduce continuous product improvement.
Accordingly, specifications are subject to change without notice.
Please consult with your dealer to confirm the specifications of the model selected.