This Owner's Manual is provided and hosted by Appliance Factory Parts.

Appliance Factory Parts
Experts in BBQ, Humidifier, & Appliance Parts
1-800-955-7075

Monessen Hearth AVFL42NIP-RB Owner's Manual

Shop genuine replacement parts for Monessen Hearth AVFL42NIP-RB

Find Your Monessen Hearth Fireplace Parts - Select From 701 Models

-------- Manual continues below --------

Beginning Manufacturing Date: April 2021
Ending Manufacturing Date: Active

42” Artisan Vent Free Linear Fireplace

AVFL42NIP-BU
AVFL42PIP-BU

AVFL42NIP-RB
AVFL42PIP-RB

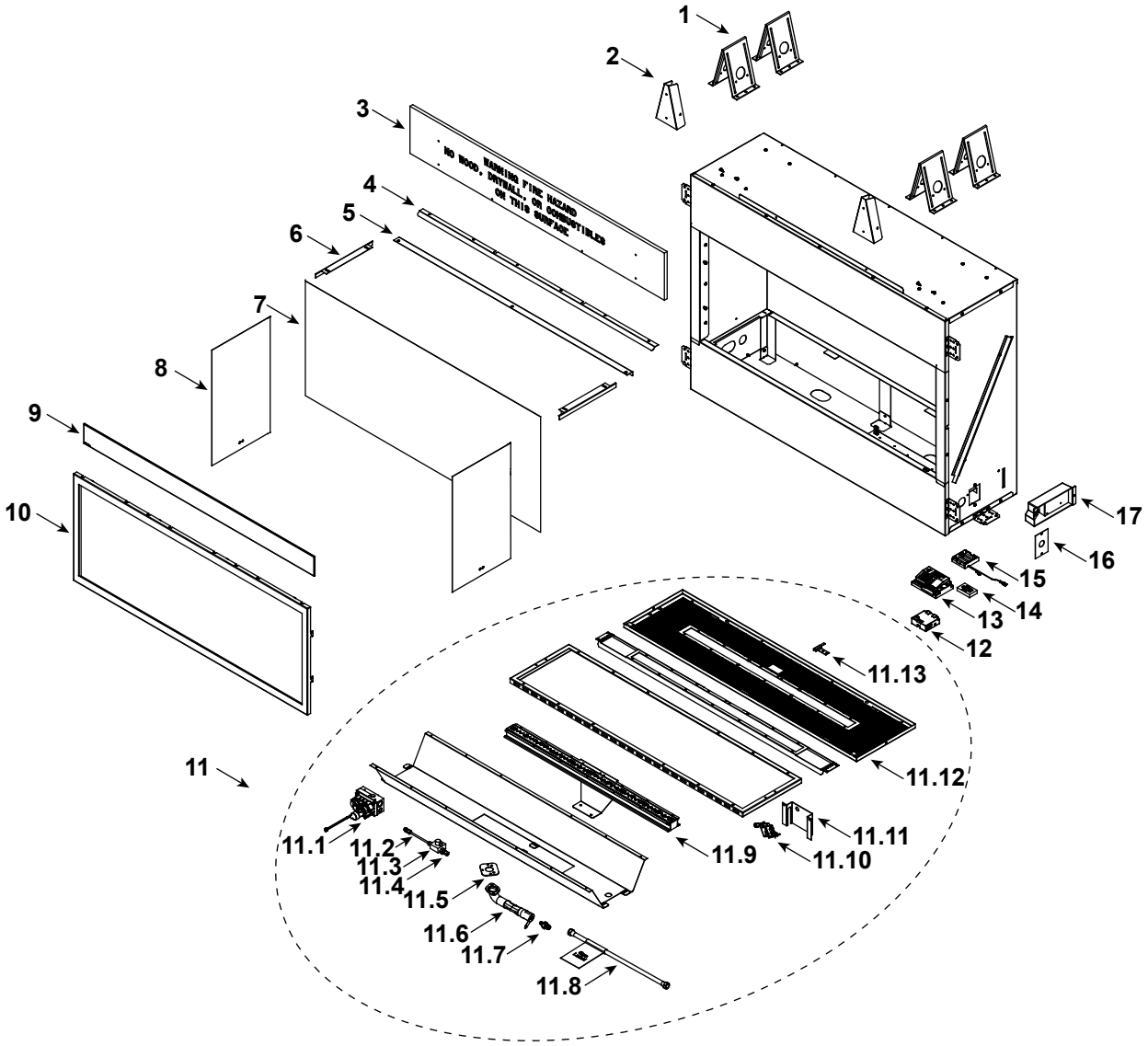

Part number list on following page.

05/21

Beginning Manufacturing Date: April 2021
Ending Manufacturing Date: Active

IMPORTANT: THIS IS DATED INFORMATION. Parts must be ordered from a dealer or distributor. **Hearth and Home Technologies does not sell directly to consumers.** Provide model number and serial number when requesting service parts from your dealer or distributor.

ITEM	DESCRIPTION	COMMENTS	PART NUMBER	Stocked at Depot
1	Top Standoff	Qty 4 req	11864I	
2	Bracket	Qty 2 req	SRV4099-198	
3	Non-combustibe Board		SRV4115-325	
4	Hood		SRV4115-135	
5	Panel Bracket (Back)		SRV4115-195	
6	Panel Bracket (Sides)	Qty 2 req	SRV4099-196	
7	Back Panel		SRV4115-170	Y
8	Side Panel	Qty 2 req	SRV4115-171	Y
9	Deflection Glass		SRV4115-301	Y
10	Frame & Screen Assembly		SRV4115-029	Y
	Flex Line w/Shutoff		SRV69D0030	Y
11	Complete Service Engine	AVFL42NIP-RB	SRV4115-015	
		AVFL42PIP-RB	SRV4115-016	
		AVFL42NIP-BU	SRV4120-015	
		AVFL42PIP-BU	SRV4120-016	
11.1	Valve Assembly	NG	SRV4604-300	Y
		Propane	SRV4604-301	Y
11.2	Tube, 3/16 Pilot		SRV20304115	Y
11.3	Pilot Regulator		SRV14D0469	Y
11.4	Fitting, 3/16 Tube x 1/8 NPT	Qty 2 req	SRV20H0109	Y
11.5	Venturi Gasket		SRV45D0032	Y
11.6	Venturi Assembly	NG	SRV4099-034	Y
		Propane	SRV4099-033	Y
11.7	Orifice Flare .0960 (#41) NG	AVFL42NIP-RB	SRV4018-353	Y
	Orifice Flare .0595 (#53) Propane	AVFL42PIP-RB	SRV4018-352	Y
	Orifice Flare .1110 (#34 NG	AVFL42NIP-BU	SRV4018-390	Y
	Orifice Flare .0700 (#50) Propane	AVFL42PIP-BU	SRV4018-375	Y
11.8	Flex Gas Line, 16”		SRV4121-006	
11.9	Burner Assembly		SRV4115-021	Y
11.1	Pilot Assembly	NG	SRV26D2529	Y
		Propane	SRV14D0476	Y
11.11	Pilot Shield		SRV4099-141	
11.12	Screen Cover		SRV4115-109	
11.13	Pilot Carry Over		SRV4099-143	
	Remote RC300-MON-VFL		SRV4018-149	

Additional service part numbers appear on following page.

Beginning Manufacturing Date: April 2021
Ending Manufacturing Date: Active

IMPORTANT: THIS IS DATED INFORMATION. Parts must be ordered from a dealer or distributor. **Hearth and Home Technologies does not sell directly to consumers.** Provide model number and serial number when requesting service parts from your dealer or distributor.

ITEM	DESCRIPTION	COMMENTS	PART NUMBER	Stocked at Depot
12	Thermocouple Module		SRV4018-064	Y
	Wiring Harness, Thermocouple Module		SRV20301890	Y
13	Module, IPI 30 Black		2166-338	Y
14	ODS Adapter Box		SRV4604-302	Y
	Wiring Harness, ODS Box to Adapter Box		SRV4604-304	Y
	Wiring Harness, 8K-1 Adapter Box		SRV4604-305	Y
15	Battery Pack		SRV2166-323	Y
	Transformer, 6 Volt Wall		SRV2326-131	Y
	Harness, IFT 6 Pin Wiring		SRV2326-132	Y
16	Cover Plate		SRV4604-103	Y
17	Junction Box		SRV4021-013	Y

#18 IPI Wall Kit

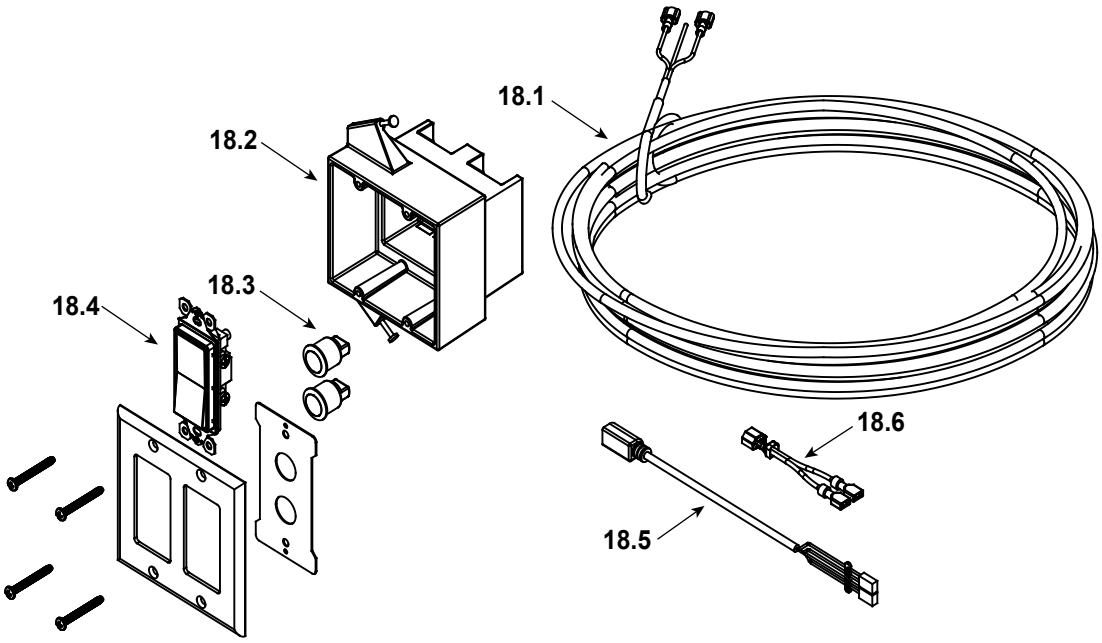

18	IPI Wall Kit		SRV4099-023	
18.1	Thermostat Wire		SRV2118-170	Y
18.2	Outlet Box		SRV4021-117	Y
18.3	LED Panel Switch	Qty 2 req	20308586K	
18.4	Wall Switch		20304686K	
18.5	Input Cable		20308587K	
18.6	Jumper Wire		SRV2187-198	Y