This Owner's Manual is provided and hosted by Appliance Factory Parts.

Appliance Factory Parts
Experts in BBQ, Humidifier, & Appliance Parts
1-800-955-7075

MAJESTIC CFL-18LP-C Owner's Manual

Shop genuine replacement parts for MAJESTIC CFL-18LP-C

Find Your MAJESTIC Fireplace Parts - Select From 585 Models

-------- Manual continues below --------

HEARTH & HOME technologies®

Owner's Manual

Installation and Operation

MODELS:

NATURAL GAS	PROPANE
CFL-18NG-C	CFL-18LP-C
CFL-24NG-C	CFL-24LP-C
CFL-30NG-C	CFL-30LP-C
CFL-24NG-IPI	CFL-24LP-IPI

GAS-FIRED

c UL us LISTED

DO NOT DISCARD

CAUTION

DO NOT DISCARD THIS MANUAL

- Important operating and maintenance instructions included.
- Read, understand and follow these instructions for safe installation and operation.
- Leave this manual with party responsible for use and operation.

⚠ WARNING: If the information in these instructions is not followed exactly, a fire or explosion may result causing property damage, personal injury, or death.

- Do not store or use gasoline or other flammable vapors and liquids in the vicinity of this or any other appliance.
- **What to do if you smell gas**
  - Do not try to light any appliance.
  - Do not touch any electrical switch. Do not use any phone in your building.
  - Immediately call your gas supplier from a neighbor's phone. Follow the gas supplier's instructions.
  - If you cannot reach your gas supplier, call the fire department.
- Installation and service must be performed by a qualified installer, service agency, or the gas supplier.

In the Commonwealth of Massachusetts:

- Installation must be performed by a licensed plumber or gas fitter.
- The chimney flue damper, when used with gas logs, will be welded open or completely removed.
- A CO detector shall be installed in the room where the appliance is installed.

⚠ WARNING

HOT SURFACES!
Glass and other surfaces are hot during operation AND cool down.

Hot glass will cause burns.

- Do not touch glass until it is cooled
- NEVER allow children to touch glass
- Keep children away

- CAREFULLY SUPERVISE children in same room as fireplace.
- Alert children and adults to hazards of high temperatures.

High temperatures may ignite clothing or other flammable materials.

- Keep clothing, furniture, draperies and other flammable materials away.

Installation and service of this appliance should be performed by qualified personnel. Hearth & Home Technologies recommends NFI certified professionals.

NFI NATIONAL FIREPLACE INSTITUTE® A CERTIFICATION AGENCY

Note: The use of a thermostat is prohibited in vented log installations.

WARNING: This product and the fuels used to operate this product (liquid propane or natural gas), and the products of combustion of such fuels, can expose you to chemicals including benzene, which is known to the State of California to cause cancer and reproductive harm. For more information go to: www.P65Warnings.ca.gov.

Read this manual before installing or operating this appliance.
Please retain this owner's manual for future reference.

Congratulations

Congratulations on selecting a Hearth & Home Technologies gas fireplace, an elegant and clean alternative to wood burning fireplaces. The gas fireplace you have selected is designed to provide the utmost in safety, reliability, and efficiency.

As the owner of a new fireplace, you'll want to read and carefully follow all of the instructions contained in this owner's manual. Pay special attention to all cautions and warnings.

This owner's manual should be retained for future reference. We suggest that you keep it with your other important documents and product manuals.

The information contained in this owner's manual, unless noted otherwise, applies to all models and gas control systems.

Your new Hearth & Home Technologies gas fireplace will give you years of durable use and trouble-free enjoyment. Welcome to the Hearth & Home Technologies family of fireplace products!

Homeowner Reference Information

We recommend that you record the following pertinent information about your appliance.

Model Name: _____ Date purchased/installed: _____

Serial Number: _____ Location on appliance: _____

Dealership purchased from: _____ Dealer Phone: _____

Notes: _____

_____

Listing Label Information/Location

The model information regarding your specific appliance can be found on the rating plate usually located in the control area of the appliance.

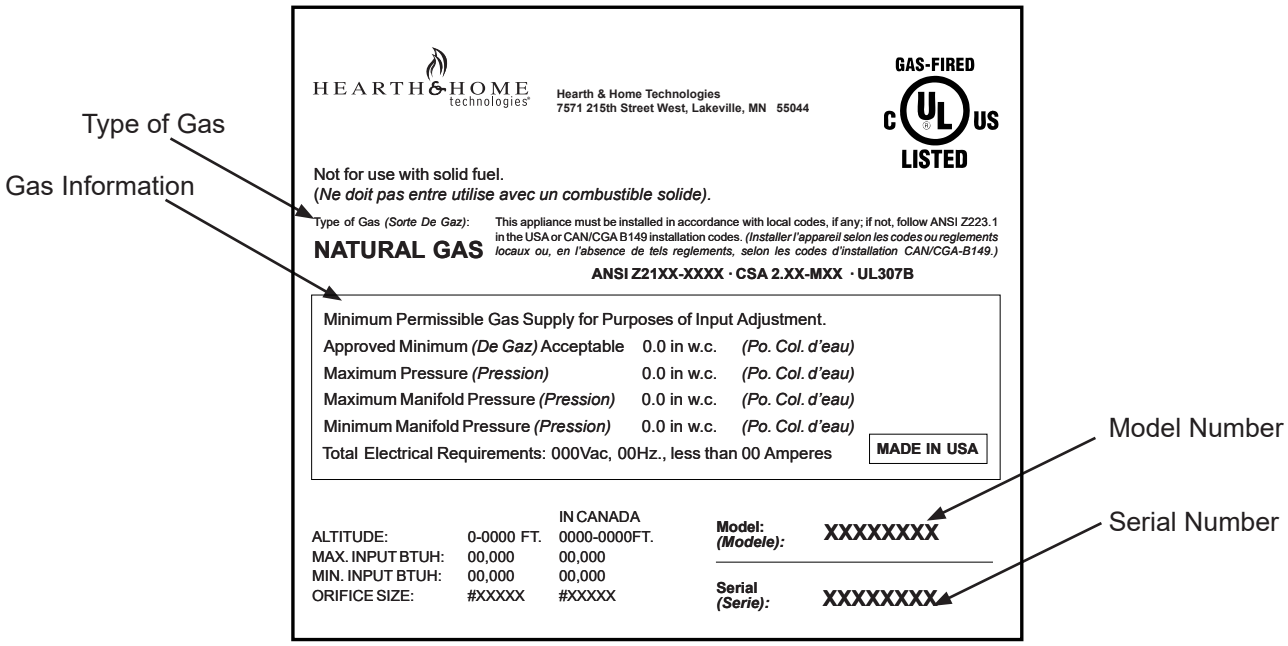

Table of Contents

1 Introduction

A. Appliance Certification 4
B. BTU Specifications 6
C. High Altitude Installation 6

2 Getting Started

A. Inspect Appliance and Components 7
B. Installation 7

3 Operating Guidelines and Maintenance Instructions

A. Before Lighting Appliance 10
B. Maintenance 10

4 Troubleshooting

A. Standing Pilot Ignition System 13
B. IntelliFire® Ignition System 15

5 Reference Materials

➔ A. Service Parts 17
B. Limited Lifetime Warranty 22
C. Contact Information 24

➔ = Contains updated information.

1 Introduction

A. Appliance Certification

MODELS: **CFL-18NG/LP-C, CFL-24NG/LP-C, CFL-30NG/LP-C, CFL-24NG/LP-IPI**

LABORATORY: **Underwriters Laboratories, Inc. (UL)**

TYPE: **Decorative Gas Appliances for Installation in Solid-Fuel Burning Fireplaces**

STANDARD: **ANSI Z21.60b-2004 CSA 2.26b-2004**

These gas log sets have been tested and listed in the U.S. in accordance with **ANSI Z21.60b-2004**. They have been listed by Underwriters Laboratories Inc. for installation and operation in the United States and Canada as described in these Installation and Operation Instructions. All components are UL, AGA, CGA or CSA safety certified.

Check with your local building code agency prior to installing this appliance to ensure compliance with local codes, including the need for permits and follow-up inspections. In the absence of local codes, comply with the National Fuel Gas Code, ANSI Z223.1-Latest Edition in the U.S. If any assistance is required during installation, please contact your local dealer.

⚠ WARNING

Fire Risk
Asphyxiation Risk

- This log set must NOT be installed in an unvented appliance.
- Open the chimney damper to its fully open position when burning this gas log set.
- Logs must never be burned without the flue damper in the full open position. Failure to do so is dangerous to your health and voids all warranties.
- All gas appliances produce some carbon monoxide when operated. Carbon monoxide is a colorless, odorless, poisonous gas. Adequate provisions must be made to provide combustion air for this gas log set. If outside air is not accessed by the fireplace, it may be necessary that an additional combustion air source be provided.

CAUTION

Check the construction of the fireplace before installing the gas log set. The area of the flue should not be less than 1/11 the area of the fireplace opening. Non-airtight glass doors should be installed on the fireplace if the area of the flue is less than 1/11 the area of the fireplace opening. Airtight doors must never be used with this gas log set.

Gas Log Sets are Decorative Gas Appliances for Installation in a Solid-fuel Burning Fireplace. Minimum fireplace sizes for these models is shown in Figure 1.

This log set is to be installed only in a solid-fuel burning fireplace with a working flue and one constructed of non-combustible material. The minimum permanent vent opening provided by the fireplace chimney damper to vent the flue products must not be less than 51 square inches (328 cm^2). The chimney damper MUST be fixed in a manner to maintain the minimum permanent vent opening. This may be accomplished by fastening the damper stop clamp provided to the edge of the damper to prevent its closing.

The installation, including provisions for combustion and ventilation air, must conform with the National Fuel Gas Code ANSI Z223.1 (in the United States), the CAN/CGA B-149 Installation Code (in Canada) and applicable local building codes.

These models can be installed in a bedroom (in the United States) which has a total volume of unconfined space appropriate to the particular installation. Refer to the National Fuel Gas Code ANSI Z223.1/NFPA 54-(current edition). The Uniform Mechanical Code (current edition), and Local Building Officials for the options allowed in obtaining an effective bedroom volume of unconfined space.

Always keep the appliance area clear and free from combustible materials, gasoline, and other flammable vapors and liquids.

***WARNING! Risk of Fire, Explosion or Electric Shock! DO NOT** use this appliance if any part has been under water. Call a qualified service technician to inspect the appliance and to replace any part of the control system and/or gas control which has been under water.*

⚠ WARNING

Fire Risk

- THIS UNIT IS NOT FOR USE WITH SOLID FUEL. Solid fuels shall not be burned in a fireplace where a decorative appliance is installed. Failure to follow these instructions will result in a fire.

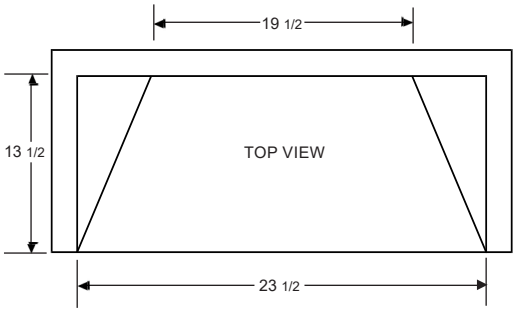

MINIMUM FIREPLACE SIZE
FRONT WIDTH : 23 1/2" (750mm)
REAR WIDTH : 19 1/2" (521mm)
DEPTH : 13 1/2" (331mm)
HEIGHT : 22" (508mm)

MODEL CFL-18-C

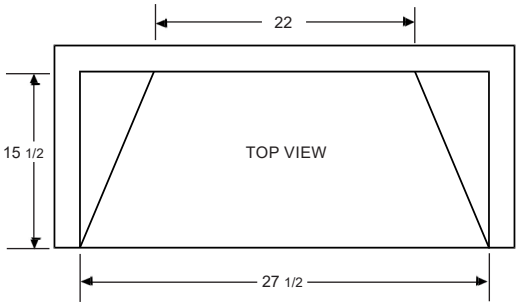

MINIMUM FIREPLACE SIZE
FRONT WIDTH : 27 1/2" (750mm)
REAR WIDTH : 22" (521mm)
DEPTH : 15 1/2" (331mm)
HEIGHT : 22" (508mm)

MODEL CFL-24-C

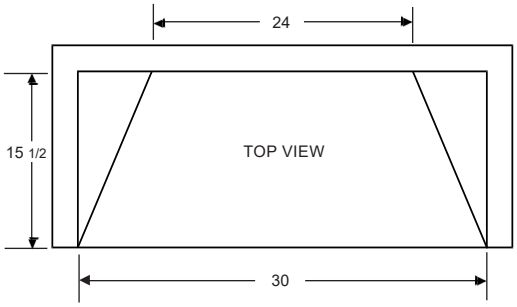

MINIMUM FIREPLACE SIZE
FRONT WIDTH: 30" (750mm)
REAR WIDTH : 24" (521mm)
DEPTH : 15 1/2" (331mm)
HEIGHT : 22" (508mm)

MODEL CFL-30-C

Figure 1. Minimum Fireplace Sizes for CFL-18/24/30-C

B. BTU Specifications

Models (U.S. or Canada)		Input BTU/h	Orifice Size (DMS)
CFL-18NG-C CFL-24NG-C CFL-30NG-C CFL-24NG-IPI	*US (0-2000 FT)*	60,000	7-1.55 mm
	CANADA (2000-4500 FT)	54,000	#25 DMS
CFL-18LP-C CFL-24LP-C CFL-30LP-C CFL-24LP-IPI	*US (0-2000 FT)*	60,000	2.30 mm
	CANADA (2000-4500 FT)	54,000	#43 DMS

C. High Altitude Installation

NOTICE: *If the heating value of the gas has been reduced, these rules do not apply. Check with your local gas utility or authorities having jurisdiction.*

When installing above 2000 feet elevation:

- In the USA: Reduce input rate 4% for each 1000 feet above 2000 feet.
- In CANADA: Reduce input rate 10% for elevations between 2000 feet and 4500 feet. Above 4500 feet, consult local gas utility.

Check with your local gas utility to determine proper orifice size.

2 Getting Started

***CAUTION!** When installing this log set in a factory built fireplace, be certain to consult the fireplace installation manual. ALL knockouts in the fireplace through which the gas supply line is run MUST be resealed with insulation after the gas line is in place.*

These models contain complete gas-burner, grate(s), and log components needed. Use caution when handling logs to avoid damage. Position the gas-burner assembly to the rear of the fireplace. Once fully assembled, the front log will extend forward of the burner assembly.

***WARNING! Risk of Asphyxiation!** Improper positioning of log set may allow spillage and prohibit proper draft.*

- *Position the log set as close to the back of the fireplace as possible.*

A. Inspect Appliance and Components

- Carefully remove the appliance and components from the packaging.
- If packaged separately, the log set and appliance grate must be installed.
- Report to your dealer any parts damaged in shipment, particularly the condition of the glass.
- **Read all of the instructions before starting the installation. Follow these instructions carefully during the installation to ensure maximum safety and benefit.**

***WARNING! Risk of Fire or Explosion!** Damaged parts could impair safe operation. **DO NOT** install damaged, incomplete or substitute components. Keep appliance dry.*

Hearth & Home Technologies disclaims any responsibility for, and the warranty will be voided by, the following actions:

- Installation and use of any damaged appliance or vent system component.
- Modification of the appliance or vent system.
- Installation other than as instructed by Hearth & Home Technologies.
- Improper positioning of the gas logs or the glass door.
- Installation and/or use of any component part not approved by Hearth & Home Technologies.

Any such action may cause a fire hazard.

B. Installation

1. GAS CONNECTION

a. Run proper size gas line into fireplace. A 1/2 inch (13mm) gas line, with a 3/8 inch (10mm) reduction for hook-up, is usually sufficient for the Gas Log set; however, if the run is unusually long, a larger line may be required. Contact your local gas company or Department of Building and Safety if there are any questions.

b. Optimum appliance performance requires proper input pressures. Pressure requirements are:

Gas Pressure	Natural Gas	Propane
Minimum inlet pressure	5.0 in. w.c.	11.0 in. w.c.
Maximum inlet pressure	10.0 in. w.c.	13.0 in. w.c.
Manifold pressure	3.5 in. w.c.	10.0 in. w.c.

***WARNING! Risk of Fire or Explosion!** High pressure will damage valve. Low pressure may cause explosion.*

- Verify inlet pressures. Verify minimum pressures when other household gas appliances are operating.
- Install regulator upstream of valve if line pressure is greater than 1/2 psig.

***NOTICE:** This installation must conform with local codes. In the absence of local codes you must comply with the National Fuel Gas Code, ANSI Z223.1-latest edition in the U.S.A. and the CAN/CGA B149 Installation Codes in Canada.*

c. The appliance and its individual shut off valve must be disconnected from the gas supply piping system during any pressure testing of the system at test pressures in excess of 1/2 psig.

d. This appliance must be isolated from the gas supply piping system by closing its individual manual shut off valve during any pressure testing of the gas supply piping system at test pressures equal to or less than 1/2 psig.

Note: The gas supply line should be purged of any trapped air prior to the first firing of the unit.

e. A damper stop clamp with set screw is provided to prevent full closure of the fireplace damper blade. Attach the clamp to the edge of the damper blade with pliers or wrenches. If the damper stop supplied does not fit the application, use a permanent means that will keep the damper open to a MINIMUM of 51 square inches (328cm^2). See Figure 1.

WARNING! Risk of Fire!

- *Open the chimney damper to its FULLY OPEN position when burning this gas log set.*
- ***DO NOT** burn Logs without the flue damper in the FULL OPEN position. Failure to do so is dangerous to your health and voids all warranties.*

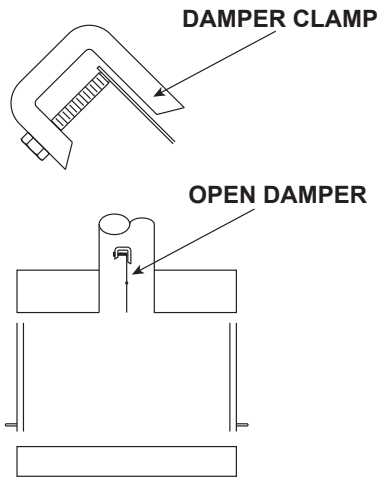

Figure 1.

Note: The Commonwealth of Massachusetts requires that the chimney flue damper, when used with gas logs, shall be welded open or completely removed.

f. Test fire the unit after referring to the **SAFETY INFORMATION** and **LIGHTING INSTRUCTIONS** found in Section 3 in this manual, or on the label plate assembly found on the gas-burner.

g. After the gas line installation is complete, all connections must be tightened and checked for leaks with a commercially-available, non-corrosive leak check solution. Be sure to rinse off all leak check solution following testing. Refer to Section 3, **OPERATING GUIDELINES** and **MAINTENANCE INSTRUCTIONS.**

h. Once the gas-burner is test fired and gas supply lines are purged, assemble the grate(s) and logs. Be certain to follow the Log Placement Instructions shipped with the unit. Remember to keep the Log Instructions along with this manual for future use.

2. ELECTRICAL INSTALLATION

- This appliance may be used with a wall switch and/or remote control.
- Use low resistance thermostat wire for wiring from ignition system to the wall switch.
- Keep wire lengths as short as possible by removing any excess wire length.
- Low voltage and 110 VAC voltage cannot be shared within the same wall box.

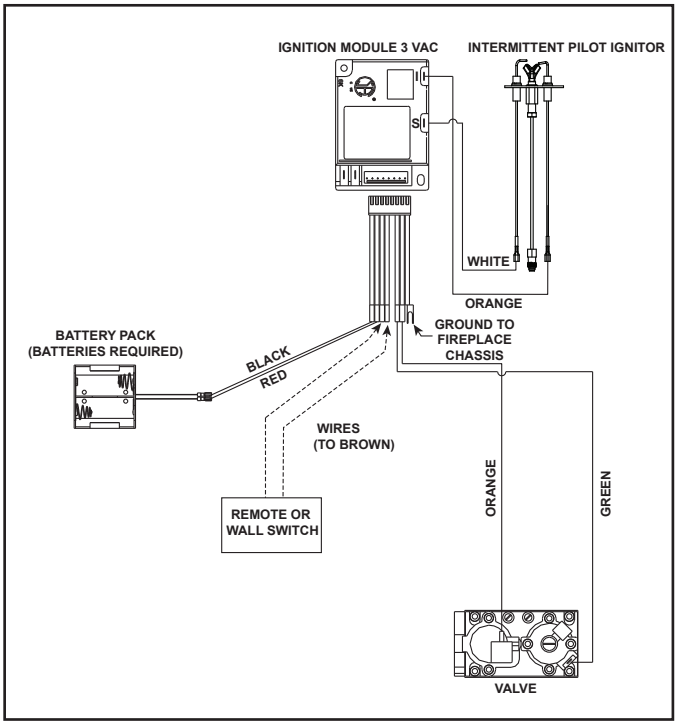

Figure 2. IPI Wiring Diagram-CFL-24NG-IPI and CFL-24LP-IPI

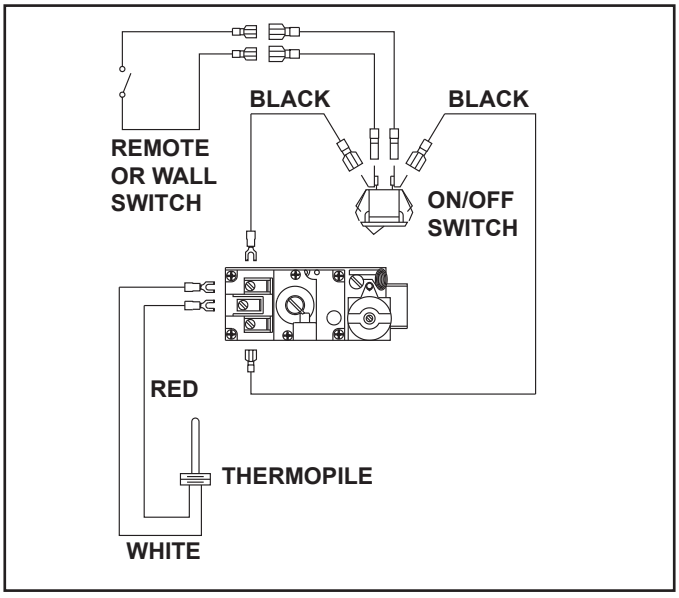

Figure 3. Standing Pilot Wiring Diagram

3. AIR SHUTTER SETTINGS.

This appliance has an adjustable air shutter (which controls the primary air) factory set for the minimum vertical vent run. If your installation has more than the minimum required vertical vent length, adjustment of the air shutter may be necessary to obtain optimal flame appearance. **This should be adjusted by a qualified installer at the time of installation.**

Air Shutter Settings

	NG	Propane
Burner	3/8 in.	Full Open

4. REMOTE CONTROL

- If a remote control is used, the receiver cannot be placed under the burner. If possible, place the receiver outside the combustion chamber.
- If the receiver must be placed in the combustion chamber, the protective heat shield MUST be used. See Figure 4.

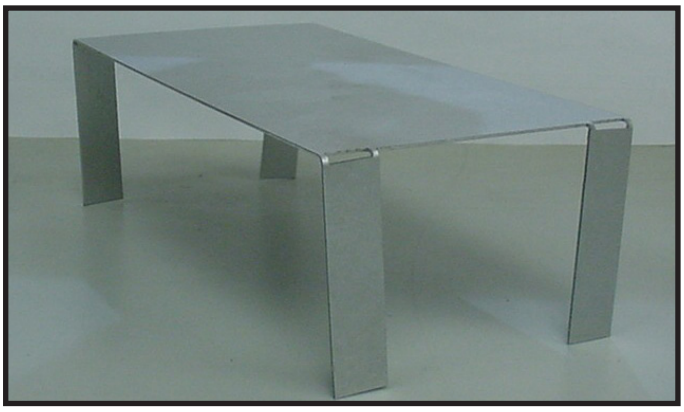

Figure 4. Protective Heat Shield

- Position receiver on left side of gas log set (opposite the pilot). Place protective heat shield over receiver. See Figure 5.

Figure 5. Receiver Location-Left Side of Log Set

3 Operating Guidelines and Maintenance Instructions

A. Before Lighting Appliance

Before lighting this appliance determine if it has a Standing Pilot or IntelliFire® ignition system by viewing the wiring system and gas valve. If this appliance has a red or black ignitor button (see Figure 3 and Figure 4) this appliance has a Standing Pilot ignition system. If there is no red or black ignitor button, this appliance has an IntelliFire ignition system.

⚠ WARNING

Fire Risk
Be sure fireplace screen or glass doors are in place when burning fireplace logs. Unless other provisions for combustion air are provided, the screen or doors shall have an opening for introduction of combustion air. THIS GAS LOG SET IS NOT DESIGNED TO OPERATE WITH AIR TIGHT GLASS DOORS. Adequate combustion and cooling air must be provided or the unit will not function properly.

⚠ WARNING

Fire Risk
Explosion Risk
WARNING: To avoid possible injury, fire and explosion, please read and follow these precautions and all instructions on this appliance before lighting the pilot. Before lighting, smell at floor level and/or use other means (such as using a commercially-available, non-corrosive leak check solution on all piping and connections, using a gas detector, etc.) to check for gas leaks. NOTE: L.P. (Propane) gas can become odorless and CANNOT always be detected by smell.

Before operating this appliance have a qualified technician:

- Remove all shipping materials.
- Review proper placement of logs, rockwool, and vermiculite.
- Check the wiring.
- Ensure that there are no gas leaks.

Upon completing the gas line connection, a small amount of air will be in the lines. When first lighting the pilot light, it will take a few minutes for the lines to purge themselves of this air. Once the purging is complete, the pilot and burner will light and operate as indicated in the instruction manual. Subsequent lighting of the appliance will not require such purging.

⚠ WARNING

HOT SURFACES!
Glass and other surfaces are hot during operation AND cool down.

Hot glass will cause burns.
- Do not touch glass until it is cooled
- NEVER allow children to touch glass
- Keep children away

- CAREFULLY SUPERVISE children in same room as fireplace.
- Alert children and adults to hazards of high temperatures.

High temperatures may ignite clothing or other flammable materials.
- Keep clothing, furniture, draperies and other flammable materials away.

Improper installation, adjustment, alteration, service or maintenance can cause injury or property damage. For assistance or additional information, consult a qualified service technician, service agency or your dealer.

***WARNING! Risk of Fire, Explosion or Electric Shock! DO NOT** use this appliance if any part has been under water. Call a qualified service technician to inspect the appliance and to replace any part of the control system and/or gas control which has been under water.*

B. Maintenance

Periodically remove the logs and examine the burner. If dirty, clean with a soft brush. Also examine the area around the burner air shutter and the pilot. Any dirt or lint in this area should be removed. This will ensure long life and trouble-free operation.

The appliance and venting system should be inspected before initial use and inspected and cleaned at least annually by a qualified field service person.

Lighting Instructions (IPI)

The IPI system must be operated with two D-cell batteries.

FOR YOUR SAFETY READ BEFORE LIGHTING

WARNING: If you do not follow these instructions exactly, a fire or explosion may result causing property damage, personal injury or loss of life.

A. This appliance is equipped with an intermittent pilot ignition (IPI) device which automatically lights the burner. **DO NOT** try to light the burner by hand.

B. BEFORE LIGHTING, smell all around the appliance area for gas. Be sure to smell next to the floor because some gas is heavier than air and will settle on the floor.

WHAT TO DO IF YOU SMELL GAS

- **DO NOT** try to light any appliance.
- **DO NOT** touch any electric switch; do not use any phone in your building.
- Immediately call your gas supplier from a neighbor's phone. Follow the gas supplier's instructions.
- If you cannot reach your gas supplier, call the fire department.

C. DO NOT use this appliance if any part has been under water. Immediately call a qualified service technician to inspect the appliance and to replace any part of the control system and any gas control which has been under water.

WARNING:

DO NOT CONNECT LINE VOLTAGE (110/120 VAC OR 220/240 VAC) TO THE CONTROL VALVE.

Improper installation, adjustment, alteration, service or maintenance can cause injury or property damage. Refer to the owner's information manual provided with this appliance.

This appliance needs fresh air for safe operation and must be installed so there are provisions for adequate combustion and ventilation air.

WARNING: This product and the fuels used to operate this product (liquid propane or natural gas), and the products of combustion of such fuels, can expose you to chemicals including benzene, which is known to the State of California to cause cancer and reproductive harm. For more information go to: www.P65Warnings.ca.gov.

Keep burner and control compartment clean. See installation and operating instructions accompanying appliance.

CAUTION:

Hot while in operation. **DO NOT** touch. Keep children, clothing, furniture, gasoline and other liquids having flammable vapors away.

NOT FOR USE WITH SOLID FUEL

For use with natural gas and propane. A conversion kit, as supplied by the manufacturer, shall be used to convert this appliance to the alternate fuel.

Also Certified for Installation in a Bedroom or a Bedsitting Room.

For assistance or additional information, consult a qualified installer, service agency or the gas supplier.

For additional information on operating your Hearth & Home Technologies fireplace, please refer to www.hearthnhome.com.

LIGHTING INSTRUCTIONS (IPI)

1. This appliance is equipped with an ignition device which automatically lights the burner. **DO NOT** try to light the burner by hand.

GAS VALVE

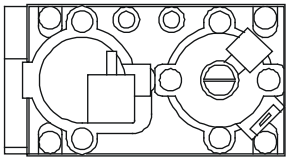

2. Wait five (5) minutes to clear out any gas. Then smell for gas, including near the floor. If you smell gas, STOP! Follow "B" in the Safety Information located on the left side of this label. If you do not smell gas, go to next step.
3. To light the burner:

   Equipped with wall switch: Turn ON/OFF switch to ON.

   Equipped with remote or wall control: Press ON or FLAME button.

   Equipped with thermostat: Set temperature to desired setting.
4. If the appliance does not light after three tries, call your service technician or gas supplier.

TO TURN OFF GAS TO APPLIANCE

1. Equipped with wall switch: Turn ON/OFF switch to OFF.

   Equipped with remote or wall control: Press OFF button.

   Equipped with thermostat: Set temperature to lowest setting.
2. Service technician should turn off electric power to the control when performing service.

Final inspection by _____

FOR YOUR SAFETY READ BEFORE LIGHTING

WARNING: If you do not follow these instructions exactly, a fire or explosion may result causing property damage, personal injury or loss of life.

A. This appliance has a pilot which must be lighted by hand. When lighting the pilot, follow these instructions exactly.

B. BEFORE LIGHTING, smell all around the appliance area for gas. Be sure to smell next to the floor because some gas is heavier than air and will settle on the floor.

WHAT TO DO IF YOU SMELL GAS

- Do not try to light any appliance.
- Do not touch any electric switch; do not use any phone in your building.
- Immediately call your gas supplier from a neighbor's phone. Follow the gas supplier's instructions.
- If you cannot reach your gas supplier, call the fire department.

C. Use only your hand to push in or turn the gas control knob. Never use tools. If the knob will not push in or turn by hand, **DO NOT** try to repair it, call a qualified service technician. Force or attempted repair may result in a fire or explosion.

D. Do not use this appliance if any part has been under water. Immediately call a qualified service technician to inspect the appliance and to replace any part of the control system and any gas control which has been under water.

WARNING:

DO NOT CONNECT 110 VAC TO THE CONTROL VALVE.

Improper installation, adjustment, alteration, service or maintenance can cause injury or property damage. Refer to the owner's information manual provided with this appliance.

This appliance needs fresh air for safe operation and must be installed so there are provisions for adequate combustion and ventilation air.

WARNING: This product and the fuels used to operate this product (liquid propane or natural gas), and the products of combustion of such fuels, can expose you to chemicals including benzene, which is known to the State of California to cause cancer and reproductive harm. For more information go to: www.P65Warnings.ca.gov.

Keep burner and control compartment clean. See installation and operating instructions accompanying appliance.

CAUTION:

Hot while in operation. Do not touch. Keep children, clothing, furniture, gasoline and other liquids having flammable vapors away.

NOT FOR USE WITH SOLID FUEL

For use with natural gas and propane. A conversion kit, as supplied by the manufacturer, shall be used to convert this appliance to the alternate fuel.

Also Certified for Installation in a Bedroom or a Bedsitting Room.

For assistance or additional information, consult a qualified installer, service agency or the gas supplier.

For additional information on operating your Hearth & Home Technologies fireplace, please refer to www.fireplaces.com.

LIGHTING INSTRUCTIONS

1. Turn off all electric power to the appliance.
2. Push in gas control knob slightly and turn clockwise to "OFF".

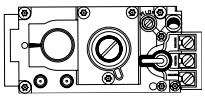

NOTE: Knob cannot be turned from "PILOT" to "OFF" unless knob is pushed in slightly. Do not force.

3. Wait five (5) minutes to clear out any gas. Then smell for gas, including near the floor. If you smell gas, STOP! Follow "B" in the Safety Information located on the left side of this label. If you don't smell gas, go to next step.
4. Find the pilot. The pilot is inside combustion chamber next to the main burner.

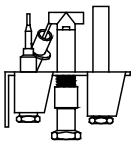

5. Turn knob on gas control counter clockwise to "PILOT".
6. Push in control knob all the way and hold in. Immediately depress red or black piezo button. It may require several depressions of the red or black piezo button until PILOT lights. If PILOT light does not light after 10 seconds, return to step 3. Continue to hold the control knob in for about one minute after the pilot is lit. Release knob and it will pop back out. Pilot should remain lit. If it goes out, repeat steps 3 through 6.
   - If knob does not pop up when released, stop and immediately call your service technician or gas supplier.
   - If the pilot will not stay lit after several tries, turn the gas control knob to "OFF" and call your service technician or gas supplier.
7. Turn gas control knob counterclockwise to "ON".
8. To light Burner, flip the on/off switch to the "ON" position, and close access grille.
9. Turn on all electric power to the appliance.

TO TURN OFF GAS TO APPLIANCE

1. Turn off all electric power to the appliance if service is to be performed.
2. Open control access panel.
3. Move switch to "OFF" position.
4. Push in gas control knob slightly and turn clockwise to OFF". Do not force.
5. Close control access panel.

Final inspection by _____

Figure 8. Standing Pilot Lighting Instructions

4 Troubleshooting

With proper installation, operation, and maintenance your gas appliance will provide years of trouble-free service. If you do experience a problem, this troubleshooting guide will assist a qualified service technician in the diagnosis of a problem and the corrective action to be taken. This troubleshooting guide can only be used by a qualified service technician. Contact your dealer to arrange a service call by a qualified service technician.

A. Standing Pilot Ignition System

Symptom	Possible Causes	Corrective Action
1. After repeated triggering of the red or black piezo ignitor button, the spark ignitor will not light the pilot.	A. No gas or low gas pressure.	Check the remote shut-off valves from the appliance. Usually, there is a valve near the gas main. There can be more than one valve between the appliance and the main.
	B. No propane in tank.	Check the propane tank. You may be out of fuel.
	C. Ignitor.	Check the spark at the electrode and pilot. If no spark and electrode wire is properly connected, replace the ignitor. Verify that there is no short in electrode wire.
	D. Pilot or misaligned electrode (spark at electrode).	Using match, light the pilot. If the pilot lights, turn off the pilot and trigger the piezo ignitor button again. If the pilot lights, an improper gas/air mixture caused the bad lighting and a longer purge period is recommended. If the pilot will not light, ensure the gap at the electrode and pilot is one-eighth in. to have a strong spark. If the gap is OK, replace the pilot.
2. The pilot will not stay lit after carefully following the lighting instructions.	A. Thermocouple.	Check that the pilot flame impinges on the thermocouple. Adjust the pilot for proper flame impingement. Ensure that the thermocouple connection at the gas valve is fully inserted and tight (hand tighten plus 1/4 turn). Verify proper voltage output from the thermocouple to the valve. Place one millivolt meter lead wire on the thermocouple copper lead. Place the second lead wire on the solder button on the back of the valve (blue wire). Start the pilot and hold the valve knob in. The millivolt reading should read 8-16 millivolts. If millivolt reading is less than 8 millivolts, replace thermocouple.
	B. Improper gas inlet pressure.	Natural gas should be 5-10 in. w.c. Propane should be 11-13 in. w.c. Verify pressure with manometer.
	C. Valve.	If the thermocouple is producing 8-16 millivolts, replace control valve.
3. The pilot is burning, there is no burner flame, the valve knob is in the ON position, and the ON/OFF switch is in the ON position.	A. On/off switch or wires.	Check the ON/OFF switch and wires for proper connections. Place the jumper wires across the terminals at the switch. If the burner comes on, replace the switch. If the switch is OK, place the jumper wires across the switch wires at the gas valve. If the burner comes on, the wires are faulty or connections are bad.
	B. Thermopile may not be generating sufficient millivoltage.	Check that the pilot flame impinges thermopile properly. Be sure the wire connections from the thermopile at the gas valve terminals are tight and that the thermopile is fully inserted into the pilot bracket. Check the thermopile with a millivolt meter. Take the reading at TH-TP&TP terminals of the gas valve. The meter should read 350 millivolts minimum, while holding the valve knob depressed in the pilot position, with the pilot lit, and the ON/OFF switch in the OFF position. Replace the thermopile if the reading is below the specified minimum. With the pilot in the ON position, disconnect the thermopile leads from the valve. Take a reading at the thermopile leads. The reading should be 350 millivolts minimum. Replace the thermopile if the reading is below the minimum.

Troubleshooting (continued)

Symptom	Possible Cause	Corrective Action
3. (Continued)	c. Valve.	Turn the valve knob to the ON position. Place the ON/OFF switch in the ON position. Check the millivolt meter a the thermopile terminals. The millivolt meter should read greater than 125mV. If the reading is acceptable, and if the burner does not come on, replace the gas valve.
	d. Plugged burner orifice.	Check the burner orifice for stoppage. Remove stoppage.
	e. Wall switch or wires.	Follow the corrective action in Symptom and Possible Cause 1.a above. Check the switch and wiring.
4. Frequent pilot outage problem.	a. Pilot flame may be too high or too low, or blowing out (high pressure), causing pilot safety to drop out.	Clean thermocouple and adjust the pilot flame for proper flame impingement. Follow lighting instructions carefully.
5. The pilot and main burner extinguish while in operation.	a. No propane in tank.	Check the propane tank. Refill the fuel tank.
	b. Improper gas inlet pressure.	Verify with manometer. NG should read 5-14 in. w.c. Propane should read 10-14 in. w.c.
	c. Inner vent pipe leaking exhaust gases back into the system.	Check venting system for damage. Replace/repair improperly assembled pipe sections.
	d. Glass installed improperly.	Check to ensure glass is installed properly. Replace glass panel assembly.
	e. Thermopile or thermocouple.	Replace pilot if necessary.
	f. Improper vent cap installation.	Check for proper installation and freedom from debris or blockage.

B. IntelliFire® Ignition System

Symptom	Possible Cause	Corrective Action
1. Pilot won't light. The ignitor/module makes noise, but no spark.	a. Incorrect wiring.	Verify "S" wire (white) for sensor and "I" wire (orange) for ignitor are connected to correct terminals on module and pilot assembly.
	b. Loose connections or electrical shorts in the wiring.	Verify no loose connections or electrical shorts in wiring from module to pilot assembly. Verify connections underneath pilot assembly are tight; also verify connections are not grounding out to metal chassis, pilot burner, pilot enclosure, mesh screen if present, or any other metal object.
	c. Ignitor gap is too large.	Verify gap of igniter to right side of pilot hood. The gap should be approximately .17 in. or 1/8 in. (3 mm).
	d. Module.	Turn ON/OFF rocker switch or wall switch to OFF position. Remove ignitor wire "I" from module. Place a grounded wire about 3/16 in. (5 mm) away from "I" terminal on module. Place ON/OFF rocker switch or wall switch in ON position. If there is no spark at "I" terminal module must be replaced. If there is a spark at "I" terminal, module is fine. Inspect pilot assembly for shorted sparker wire or cracked insulator around electrode. Replace pilot if necessary.
2. Pilot won't light, there is no noise or spark.	a. No power.	Check batteries.
	b. A shorted or loose connection in wiring configuration or wiring harness.	Remove and reinstall the wiring harness that plugs into module. Verify there is a tight fit. Verify pilot assembly wiring to module. Remove and verify continuity of each wire in wiring harness. Replace any damaged components.
	c. Improper wall switch wiring.	Check wiring connections.
	d. Module not grounded.	Verify black ground wire from module wire harness is grounded to metal chassis of appliance.
	e. Module.	Turn ON/OFF rocker switch or wall switch to OFF position. Remove ignitor wire "I" from module. Place ON/OFF rocker switch or wall switch in ON position. If there is no spark at "I" terminal module must be replaced. If there is a spark at "I" terminal, module is fine. Inspect pilot assembly for shorted sparker wire or cracked insulator around electrode.
3. Pilot sparks, but Pilot will not light.	a. Gas supply.	Verify that incoming gas line ball valve is "open". Verify that inlet pressure reading is within acceptable limits, inlet pressure must not exceed 14 in. W.C.
	b. Ignitor gap is incorrect.	Verify that spark gap from ignitor to pilot hood is .17 in. or 1/8 in (3 mm).
	c. Module is not grounded.	Verify module is securely grounded to metal chassis of appliance.
	d. Module voltage output / Valve/Pilot solenoid ohms readings.	Verify battery voltage is at least 2.7 volts. Replace batteries if voltage is below 2.7.

IntelliFire Ignition System - (continued)

Symptom	Possible Cause	Corrective Action
4. Pilot lights but continues to spark, and main burner will not ignite. (If the pilot continues to spark after the pilot flame has been lit, flame rectification has not occurred.)	a. A shorted or loose connection in flame sensing rod.	Verify all connections to wiring diagram in manual. Verify connections underneath pilot assembly are tight. Verify connections are not grounding out to metal chassis, pilot burner, pilot enclosure or screen if present, or any other metal object.
	b. Poor flame rectification or contaminated flame sensing rod.	With fixed glass assembly in place, verify that flame is engulfing flame sensing rod on left side of pilot hood. Flame sensing rod should glow shortly after ignition. Verify correct pilot orifice is installed and gas inlet is set to pressure specifications. Polish flame sensing rod with fine steel wool to remove any contaminants that may have accumulated on flame sensing rod.
	c. Module is not grounded.	Verify module is securely grounded to metal chassis of appliance. Verify that wire harness is firmly connected to the module.
	d. Damaged pilot assembly or contaminated flame sensing rod.	Verify that ceramic insulator around the flame sensing rod is not cracked, damaged, or loose. Verify connection from flame sensing rod to white sensor wire. Polish flame sensing rod with fine steel wool to remove any contaminants that may have accumulated on flame sensing rod. Verify continuity with a multimeter with ohms set at lowest range. Replace pilot if any damage is detected.
	e. Module.	Turn ON/OFF rocker switch or wall switch to OFF position. Remove ignitor wire “I” from module. Place ON/OFF rocker switch or wall switch in ON position. If there is no spark at “I” terminal module must be replaced. If there is a spark at “I” terminal, module is fine.

HEARTH & HOME technologies®

A. Service Parts

CFL-18NG-C, CFL-18LP-C

Campfire 18" Gas Log Set

Beginning Manufacturing Date: Nov 2007
Ending Manufacturing Date: Active

Log Set Assembly

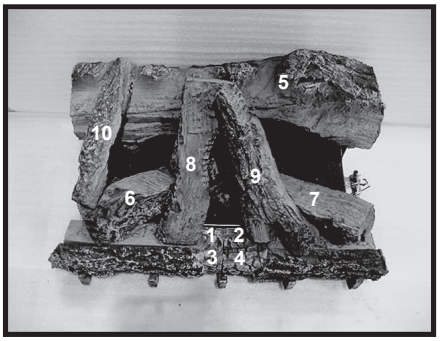

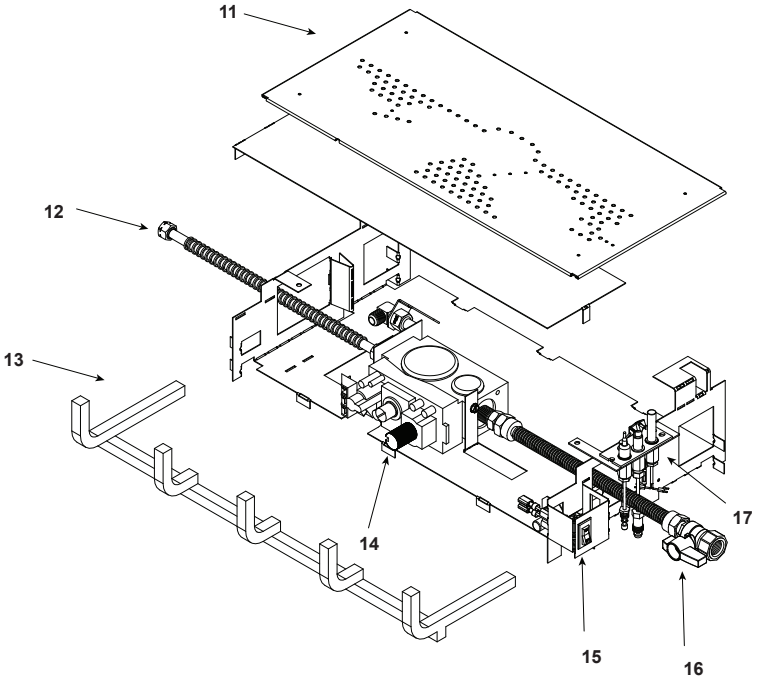

IMPORTANT: THIS IS DATED INFORMATION. Parts must be ordered from a dealer or distributor. **Hearth and Home Technologies does not sell directly to consumers**. Provide model number and serial number when requesting service parts from your dealer or distributor.

ITEM	DESCRIPTION	COMMENTS	PART NUMBER	Stocked at Depot
	Log Assembly		LOGS-CFL18	
1	Log 1	Pre 5/15/16, Must order complete assembly	SRV481-766	
2	Log 2			
3	Log 3		SRV481-755	
4	Log 4			
5	Log 5		SRV481-701	
6	Log 6		SRV481-705	
7	Log 7		SRV446-702	
8	Log 8		SRV481-703	
9	Log 9		SRV402-701	
10	Log 10		SRV446-706	
11	Burner Assembly		526-010A	Y
12	Flexible Gas Connector		477-301A	Y
13	Grate Assembly		SRV526-360	
14	Valve NG		418-500	Y
	Valve LP		418-501	Y
15	ON/Off Switch		060-521A	Y
16	Flex Ball Valve Assembly		SRV302-320	Y
17	Pilot Assembly NG		2103-010	Y
	Pilot Assembly LP		2103-011	Y

Additional service parts on following page

8/21

Log Set Assembly

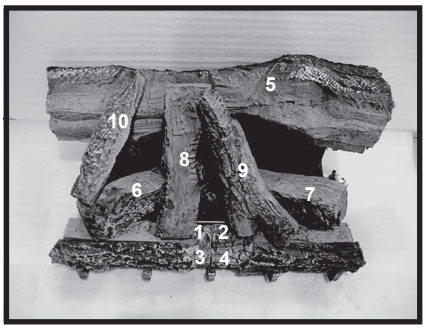

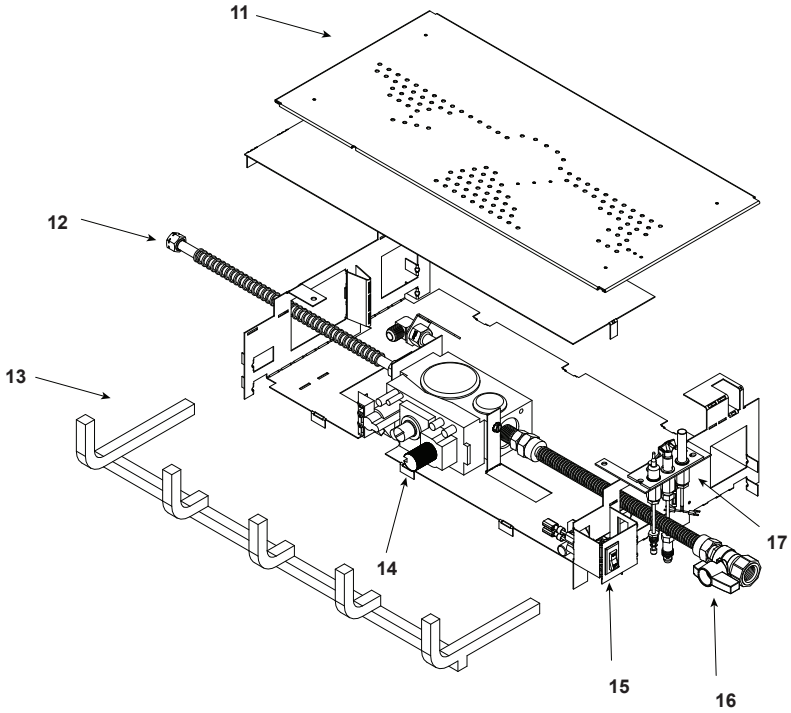

IMPORTANT: THIS IS DATED INFORMATION. Parts must be ordered from a dealer or distributor. **Hearth and Home Technologies does not sell directly to consumers**. Provide model number and serial number when requesting service parts from your dealer or distributor.

ITEM	DESCRIPTION	COMMENTS	PART NUMBER	Stocked at Depot
	Log Assembly		LOGS-CFL24	
1	Log 1	**Pre 5/15/16, Must order complete assembly**	SRV481-766	
2	Log 2			
3	Log 3		SRV481-755	
4	Log 4			
5	Log 5		SRV526-701	
6	Log 6		SRV481-705	
7	Log 7		SRV446-702	
8	Log 8		SRV481-703	
9	Log 9		SRV402-701	
10	Log 10		SRV446-706	
11	Burner Assembly		526-010A	**Y**
12	Flexible Gas Connector		477-301A	**Y**
13	Grate Assembly		SRV526-360	
14	Valve NG		418-500	**Y**
	Valve LP		418-501	**Y**
15	ON/Off Switch		060-521A	**Y**
16	Flex Ball Valve Assembly		SRV302-320	**Y**
17	Pilot Assembly NG		2103-010	**Y**
	Pilot Assembly LP		2103-011	**Y**

Additional service parts on following page

8/21

Log Set Assembly

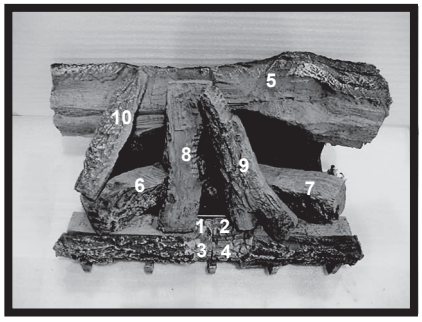

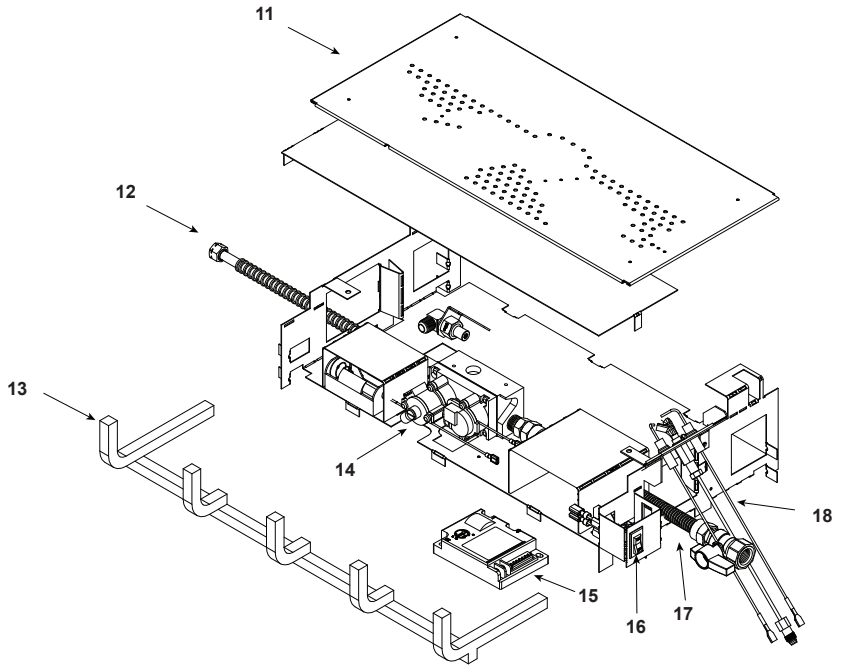

IMPORTANT: THIS IS DATED INFORMATION. Parts must be ordered from a dealer or distributor. **Hearth and Home Technologies does not sell directly to consumers**. Provide model number and serial number when requesting service parts from your dealer or distributor.

ITEM	DESCRIPTION	COMMENTS	PART NUMBER	Stocked at Depot
	Log Assembly		LOGS-CFL24	
1	Log 1	Pre 5/15/16, Must order complete assembly	SRV481-766	
2	Log 2			
3	Log 3		SRV481-755	
4	Log 4			
5	Log 5		SRV526-701	
6	Log 6		SRV481-705	
7	Log 7		SRV446-702	
8	Log 8		SRV481-703	
9	Log 9		SRV402-701	
10	Log 10		SRV446-706	
11	Burner Assembly		526-010A	Y
12	Flexible Gas Connector		477-301A	Y
13	Grate Assembly		SRV526-360	
14	Valve NG		SRV593-500	Y
	Valve LP		SRV593-501	Y
15	Control Module		SRV593-595	Y
16	ON/Off Switch		060-521A	Y
17	Flex Ball Valve Assembly		SRV302-320	Y
18	Pilot Assembly NG		SRV2090-012	Y
	Pilot Assembly LP		2090-013	Y

Additional service parts on following page

8/21

Log Set Assembly

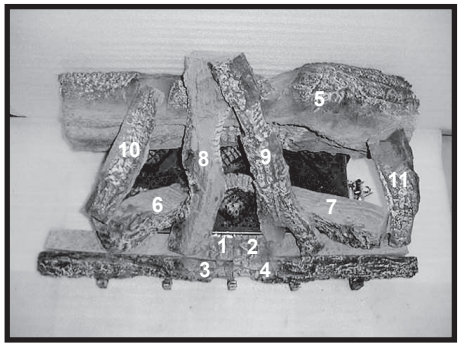

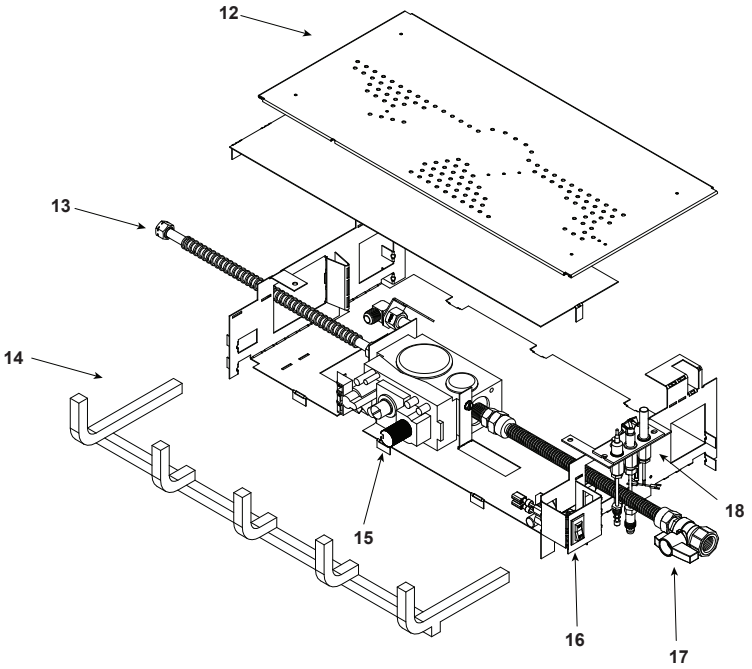

IMPORTANT: THIS IS DATED INFORMATION. Parts must be ordered from a dealer or distributor. **Hearth and Home Technologies does not sell directly to consumers**. Provide model number and serial number when requesting service parts from your dealer or distributor.

ITEM	DESCRIPTION	COMMENTS	PART NUMBER	Stocked at Depot
	Log Assembly		LOGS-CFL30	
1	Log 1	Pre 5/15/16, Must order complete assembly	SRV526-766	
2	Log 2			
3	Log 3		SRV526-755	
4	Log 4			
5	Log 5		SRV526-701	
6	Log 6		SRV481-705	
7	Log 7		SRV446-702	
8	Log 8		SRV481-704	
9	Log 9		SRV446-705	
10	Log 10		SRV446-706	
11	Log 11		SRV530-703	
12	Burner Assembly		526-010A	Y
13	Flexible Gas Connector		477-301A	Y
14	Grate Assembly		SRV526-360	
15	Valve NG		418-500	Y
	Valve LP		418-501	Y
16	ON/Off Switch		060-521A	Y
17	Flex Ball Valve Assembly		SRV302-320	Y
18	Pilot Assembly NG		2103-010	Y
	Pilot Assembly LP		2103-011	Y

Additonal service parts on following page

8/21

IMPORTANT: THIS IS DATED INFORMATION. Parts must be ordered from a dealer or distributor. **Hearth and Home Technologies does not sell directly to consumers**. Provide model number and serial number when requesting service parts from your dealer or distributor.

ITEM	DESCRIPTION	COMMENTS	PART NUMBER	Stocked at Depot
	Mineral Wool		050-721	
	Orifice NG (1.55)		526-801	Y
	Orifice LP (2.30 mm)		526-800	Y
	Remote Heat Shield		526-199	
	Vermiculite		060-720	
Standing Pilot only				
	Piezo Ignitor		291-513	Y
	Pilot Orifice NG		SRV2103-116	Y
	Pilot Orifice LP		2103-117	Y
	Thermocouple		2103-511	Y
	Thermopile		2103-512	Y
	Wire Assembly 24 in		089-550A	Y
IPI Only				
	Battery Pack		SRV593-594	Y
	Module Heat Shield		526-198	
	Pilot Orifice NG		SRV593-528	Y
	Pilot Orifice LP		SRV593-527	Y
	Wire Assembly		SRV593-590	Y
	Single Wire Assembly, 24 in		049-555A	Y

B. Limited Lifetime Warranty

Hearth & Home Technologies LLC

LIMITED LIFETIME WARRANTY

Hearth & Home Technologies LLC ("HHT") extends the following warranty for HHT gas, wood, pellet and electric hearth appliances (each a "Product" and collectively, the "Product(s)") and certain component parts set forth in the table below ("Component Part(s)") that are purchased from a HHT authorized dealer or distributor.

WARRANTY COVERAGE:

HHT warrants that the Products and their Component Parts will be free from defects in materials and workmanship for the applicable period of Warranty coverage set forth in the table below ("Warranty Period"). If a Product or Component Parts are found to be defective in materials or workmanship during the applicable Warranty Period, HHT will, at its option, repair the applicable Component Part(s), replace the applicable Component Part(s), or refund the purchase price of the applicable Product(s). The maximum amount recoverable under this Warranty is limited to the purchase price of the Product. This Warranty is transferable from the original purchaser to subsequent owners, but the Warranty Period will not be extended in duration or expanded in coverage for any such transfer. This Warranty is subject to conditions, exclusions, and limitations as described below.

WARRANTY PERIOD:

Warranty coverage begins at the date of installation. In the case of new home constructions, Warranty coverage begins on the date of first occupancy of the dwelling or six months after the sale of the Product(s) by an independent, authorized HHT dealer or distributor, whichever occurs earlier. However, the Warranty coverage shall commence no later than 24 months following the date of Product shipment from HHT, regardless of the installation or occupancy date.

The term "Lifetime" in the table below is defined as: 20 years from the beginning date of warranty coverage for gas appliances, and 10 years from the beginning date of warranty coverage for wood and pellet appliances. These time periods reflect the minimum expected useful lives of the designated Component Parts under normal operating conditions.

Warranty Period		HHT Manufactured Appliances and Venting					
Component Parts	Labor	Gas	Pellet	Wood	Electric	Venting	Component Parts Covered by this Warranty
1 Year		X	X	X		X	All parts including handles, external enameled components and other material except as covered by Warranty Conditions, Warranty Exclusions, and Warranty Limitations listed
2 Years					X		All parts except as covered by Warranty Conditions, Warranty Exclusions, and Warranty Limitations listed
2 years			X	X			Igniters, Auger Motors, Electronic Components, and Glass
		X					Electrical components limited to modules, remotes/wall switches, valves, pilots, blowers, junction boxes, wire harnesses, transformers and lights (excluding light bulbs)
		X		X			Molded Refractory Panels, Glass Liners
3 years			X				Firepots, burnpots, mechanical feeders/auger assemblies
5 years	1 year	X					Vent Free Burners, Vent Free Logs
			X	X			Castings, Medallions and Baffles
6 years	3 years			X			Catalysts
7 years	3 years		X	X			Manifold tubes, HHT Chimney and Terminations
10 years	1 year	X					Burners, logs and refractory
Limited Lifetime	3 years	X	X	X			Firebox and heat exchanger, FlexBurn® System (engine, inner cover, access cover and fireback)
1 Year	None	X	X	X	X	X	All purchased replacement parts

4021-645L 10/20

Page 1 of 2

B. Limited Lifetime Warranty *(continued)*

WARRANTY CONDITIONS:

- Because HHT cannot control the quality of any Products sold by unauthorized sellers, this Warranty only covers Products that are purchased through an HHT authorized dealer or distributor unless otherwise prohibited by law; a list of HHT authorized dealers is available on the HHT branded websites.
- This Warranty is only valid while the applicable Product remains at the site of original installation.
- This Warranty is only valid in the country in which the HHT authorized dealer or distributor that sold the applicable Product is authorized to sell applicable Product.
- Contact your installing distributor or dealer for Warranty service. If the installing dealer or distributor is unable to provide necessary parts, contact the nearest HHT authorized dealer or supplier. Additional service fees may apply if you are seeking Warranty service from a dealer other than the dealer from whom you originally purchased the applicable Product.
- No HHT consumer should bear cost of warranty service or costs incurred while servicing warranty claims (i.e., travel, gas, or mileage) when the service is performed within the terms of this Warranty. Check with your dealer or distributor in advance for any costs to you when arranging a warranty call. Travel and shipping charges for parts are not covered by this Warranty.

WARRANTY EXCLUSIONS:

This Warranty does not cover the following:

- Changes in surface finishes as a result of normal use. As a heating appliance, some changes in color of interior and exterior surface finishes may occur. This is not a flaw and is not covered under the Warranty.
- Damage to printed, plated, or enameled surfaces caused by fingerprints, accidents, misuse, scratches, melted items or other external sources and residues left on the plated surfaces from the use of abrasive cleaners or polishes.
- Repair or replacement of parts that are subject to normal wear and tear during the Warranty Period are not covered. These parts include: paint, wood and pellet gaskets, firebricks, grates, flame guides, batteries and the discoloration of glass.
- Minor expansion, contraction, or movement of certain parts causing noise. These conditions are normal and complaints related to this noise are not covered by this Warranty.
- Damages resulting from: (1) failure to install, operate, or maintain the applicable Product in accordance with the installation instructions, operating instructions, and listing agent identification label furnished with the applicable Product; (2) failure to install the applicable Product in accordance with local building codes; (3) shipping or improper handling; (4) improper operation, abuse, misuse, continued operation with damaged, corroded or failed components, accident, or improperly/incorrectly performed repairs; (5) environmental conditions, inadequate ventilation, negative pressure, or drafting caused by tightly sealed constructions, insufficient make-up air supply, or handling devices such as exhaust fans or forced air furnaces or other such causes; (6) use of fuels other than those specified in the operation instructions; (7) installation or use of components not supplied with the applicable Product or any other components not expressly authorized and approved by HHT; (8) modification of the appliance not expressly authorized and approved by HHT in writing; and/or (9) interruptions or fluctuations of electrical power supply to the applicable Product.
- Non-HHT venting components, hearth connections or other accessories used in conjunction with the applicable Product.
- Any part of a pre-existing fireplace system in which an insert or a decorative gas applicable Product is installed.
- HHT's obligation under this Warranty does not extend to the Product's capability to heat the desired space. Information is provided to assist the consumer and the dealer in selecting the proper Product for the application. Consideration must be given to the Product location and configuration, environmental conditions, insulation and air tightness of the structure.

This warranty is void if:

- The applicable Product has been over-fired, operated in atmospheres contaminated by chlorine, fluorine, or other damaging chemicals. Over-firing can be identified by, but not limited to, warped plates or tubes, deformation/warping of interior cast iron structure or components, rust colored cast iron, bubbling, cracking and discoloration of steel or enamel finishes.
- The applicable Product is subjected to prolonged periods of dampness or condensation.
- There is any damage to the applicable Product due to water or weather damage which is the result of, but not limited to, improper chimney or venting installation.

LIMITATIONS OF REMEDIES AND LIABILITY:

- **EXCEPT TO THE EXTENT PROVIDED BY LAW, HHT MAKES NO EXPRESS WARRANTIES OTHER THAN THE WARRANTY SPECIFIED HEREIN. The owner's exclusive remedy and HHT's sole obligation under this Warranty or in contract, tort or otherwise, shall be limited to replacement of the Component Part(s), repair of the Component Part(s), or refund of the original purchase price of the applicable Product(s), as specified above; provided, however, that (i) if HHT is unable to provide replacement of the Component Part(s) and repair of the Component Part(s) is not commercially practicable or cannot be timely made, or (ii) the customer is willing to accept a refund of the purchase price of the applicable Product(s), HHT may discharge all such obligations by refunding the purchase price of the applicable Product. In no event will HHT be liable for any incidental or consequential damages caused by defects in the applicable Product. Some States do not allow the exclusion or limitation of incidental or consequential damages, so the above limitation or exclusion may not apply to you. This Warranty gives you specific legal rights and you may also have other rights which vary from State to State. THE DURATION OF ANY IMPLIED WARRANTY IS LIMITED TO DURATION OF THE EXPRESSED WARRANTY SPECIFIED ABOVE FOR THE APPLICABLE PRODUCT. Some States do not allow limitations on how long an implied warranty lasts, so the above limitation may not apply to you.**

C. Contact Information

Hearth & Home Technologies
7571 215th Street West, Lakeville, MN 55044
www.hearthnhome.com

Please contact your Hearth & Home Technologies dealer with any questions or concerns.
For the location of your nearest Hearth & Home Technologies dealer,
please visit www.hearthnhome.com.

- NOTES -

CAUTION

DO NOT DISCARD THIS MANUAL

- Important operating and maintenance instructions included.
- Read, understand and follow these instructions for safe installation and operation.
- Leave this manual with party responsible for use and operation.

This product may be covered by one or more of the following patents: (United States) 6601579, 6769426, 6863064, 7077122, 7074035, 7098269, 7234932, 7258116, 7322819, 7422011, 7470729, 7726300, 8147240, 9625149 or other U.S. and foreign patents pending.

2000-945E

Printed in U.S.A. - Copyright 2021