This Owner's Manual is provided and hosted by Appliance Factory Parts.

Appliance Factory Parts
Experts in BBQ, Humidifier, & Appliance Parts
1-800-955-7075

EMPIRE VFD42FB2MF-6 Owner's Manual

Shop genuine replacement parts for EMPIRE VFD42FB2MF-6

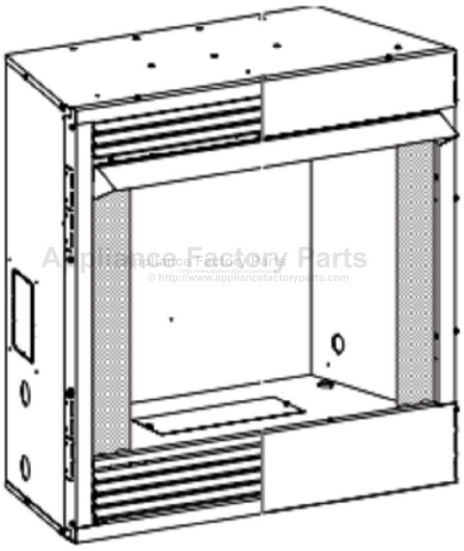

Find Your EMPIRE Fireplace Parts - Select From 642 Models

-------- Manual continues below --------

EMPIRE
COMFORT SYSTEMS
SINCE 1932

INSTALLATION INSTRUCTIONS AND OWNER'S MANUAL

DELUXE VENT-FREE UNIVERSAL FIREBOXES

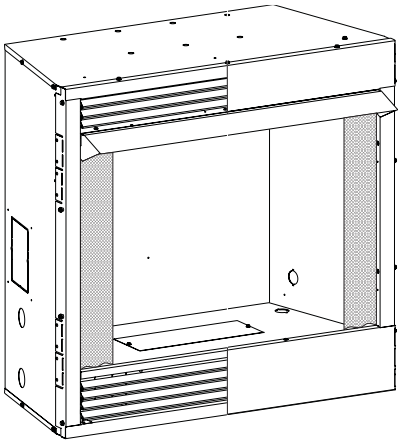

GAS-FIRED
UL
LISTED

ANSI Z21.91
Ventless Fireplace
Enclosures
for Gas Fired
Decorative Type
Unvented Room
Heaters

INSTALLER:

Leave this manual with the appliance.

CONSUMER:

Retain this manual for future reference.

⚠ WARNING

FIRE OR EXPLOSION HAZARD
Failure to follow safety warnings exactly could result in serious injury, death or property damage.

— Do not store or use gasoline or other flammable vapors and liquids in the vicinity of this or any other appliance.
— WHAT TO DO IF YOU SMELL GAS
- Do not try to light any appliance.
- Do not touch any electrical switch; do not use any phone in your building.
- Leave the building immediately.
- Immediately call your gas supplier from a neighbor's phone. Follow the gas supplier's instructions.
- If you cannot reach your gas supplier, call the fire department.

— Installation and service must be performed by a qualified installer, service agency or the gas supplier.

UNIVERSAL FIREBOX FOR ALL VENT-FREE LOG SETS MODELS:

VFD32FB0F-4	VFD36FB0F-4	VFD42FB0F-4
VFD32FB0L-4	VFD36FB0L-4	VFD42FB0L-4
VFD32FB2AF-4	VFD36FB2AF-4	VFD42FB2AF-4
VFD32FB2AL-4	VFD36FB2AL-4	VFD42FB2AL-4
VFD32FB2MF-6	VFD36FB2MF-6	VFD42FB2MF-6
VFD32FB2ML-6	VFD36FB2ML-6	VFD42FB2ML-6
	VFD36FB3MF-6	

⚠ WARNING

Improper installation, adjustment, alteration, service or maintenance can cause injury or property damage. Refer to this manual. For assistance or additional information, consult a qualified installer, service agency or the gas supplier.

FOR USE ONLY WITH A LISTED GAS-FIRED UNVENTED DECORATIVE ROOM HEATER NOT TO EXCEED 40,000 BTU/H.
Do not build a wood fire.

Carefully review the instructions supplied with the decorative type unvented room heater for the minimum fireplace size requirement. Do not install A VENT-FREE LOG SET in this firebox, unless this firebox meets the minimum dimensions required for the installation.

This appliance may be installed in an aftermarket, permanently located, manufactured home (USA only) or mobile home, where not prohibited by local codes. This appliance is only for use with the type of gas indicated on the rating plate. This appliance is not convertible for use with other gases, unless a certified kit is used.

Do not attempt to modify or alter the construction of the firebox or its components. Any modification or alteration of construction may void the warranty of this firebox. Children and adults should be alerted to the hazards of high surface temperature and should stay away to avoid burns or clothing ignition. Young children should be carefully supervised when they are in the same room as the firebox.

NATIONAL FIREPLACE INSTITUTE
NFI
CERTIFIED
www.nficertified.org

We suggest that our gas hearth products be installed and serviced by professionals who are certified in the U.S. by the National Fireplace Institute® (NFI) as NFI Gas Specialists.

TABLE OF CONTENTS

SECTION	PAGE
Important Safety Information	3
Introduction	3
Clearances	4 - 5
Firebox Installation Instructions	6 - 8
Installing Hood	8 - 9
Gas Line Connection	9
Optional FBB5 Single Speed Blower Installation Instructions	10 - 12
Junction Box Wiring Installation Instructions	13
Maintenance	13
Parts List	14
Parts View	15
Accessories	16 - 17
Master Parts Distributor List	18
How To Order Repair Parts	18
Warranty	19

IMPORTANT SAFETY INFORMATION

The installation must conform with local codes or, in the absence of local codes, with the National Fuel Gas Code, ANSI Z223.1 (latest edition) and to the National electrical Code, ANSI/NFPA70 (latest edition).

NOTE: Installation and repair should be done by a qualified service person. The appliance should be inspected before use and at least annually by a qualified service person. More frequent cleaning may be required due to excessive lint from carpeting, bedding material, etc. It is imperative that control compartment, burners and circulating air passageways of the appliance be kept clean.

Any safety screen or guard removed for servicing an appliance must be replaced prior to operating the appliance. Provide adequate combustion and ventilation air.

The flow of combustion and ventilation air MUST NOT be obstructed.

Provide adequate clearance around air openings into the combustion chamber and adequate accessibility clearance for servicing and proper operation. NEVER obstruct the front opening of the appliance.

This Empire Comfort Systems, Inc. firebox and its components have been tested and will operate safely when installed in accordance with this installation manual. Read all instructions before starting installation, then follow these instructions carefully during installation to maximize firebox benefit and safety. Report to your dealer any parts damaged in shipment.

The Empire Comfort Systems, Inc. warranty will be voided by, and Empire Comfort Systems, Inc. disclaims any responsibility for the following actions:

- **Installation of any damaged firebox.**
- **Modification of the firebox or any of the components parts thereof.**
- **Installation other than as instructed by Empire Comfort Systems, Inc.**
- **Installation and/or use of any component part or accessory not approved by Empire Comfort Systems, Inc. in combination or assembly with a Empire Comfort Systems, Inc. firebox, not withstanding any independent testing laboratory or other third party approval of such component part or accessory.**

Any such action may create a possible fire hazard. Consult your local building codes.

Firebox Screen.
The firebox screen must be in place when the firebox is operating.

INTRODUCTION

Instructions to Installer

1. Installer must leave instruction manual with owner after installation.
2. Installer must have owner fill out and mail warranty card supplied with firebox.
3. Installer should show owner how to start and operate log set that is installed into firebox.

Important

All correspondence should refer to complete Model Number, Serial Number.

Notice: During initial firing of this firebox with a log set installed, its paint will bake out, and smoke will occur. To prevent triggering of smoke alarms, ventilate the room in which the unit is installed.

Qualified Installing Agency

Installation and replacement of gas piping, gas utilization equipment or accessories and repair and servicing of equipment shall be performed only by a qualified agency. The term "qualified agency" means any individual, firm, corporation or company which either in person or through a representative is engaged in and is responsible for (a) the installation or replacement of gas piping or (b) the connection, installation, repair or servicing of equipment, who is experienced in such work, familiar with all precautions required and has complied with all the requirements of the authority having jurisdiction.

Commonwealth of Massachusetts: The installation must be made by a licensed plumber or gas fitter in the Commonwealth of Massachusetts. The state of Massachusetts requires that a flexible appliance connector cannot exceed three feet in length.

Sellers of unvented propane or natural gas-fired supplemental room heaters shall provide to each purchaser a copy of 527 CMR 30 upon sale of the unit.

In the Commonwealth of Massachusetts, unvented propane and natural gas-fired space heaters shall be prohibited in bedrooms and bathrooms.

The installation must conform with local codes or, in the absence of local codes, with the National Fuel Gas Code, ANSI Z223.1/NFPA 54.*

*Available from the American National Standards Institute, Inc., 11 West 42nd St., New York, N.Y. 10036.

CLEARANCES

Sidewall Clearances: The clearance from the inside of the firebox to perpendicular combustible side wall should not be less than 6 inches. **See Figure 1.**

Firebox Side and Back Clearances: The firebox outer casing side and back flanges are zero clearance to combustibles.

Top Framing and Finishing: Combustible finishing materials requires 3/4 inch to top of unit. **See Figure 2.**

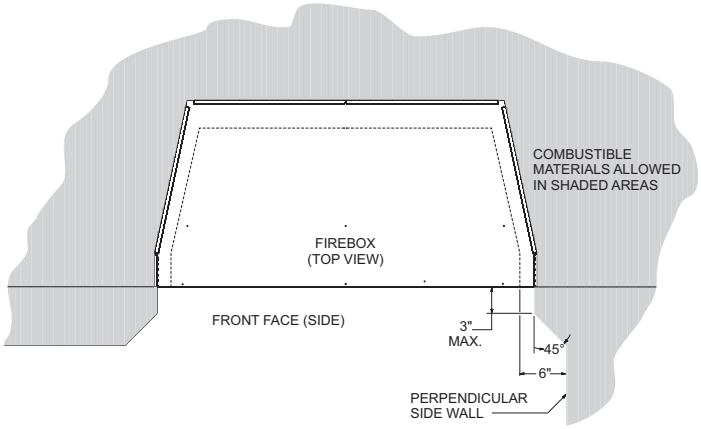

Figure 1

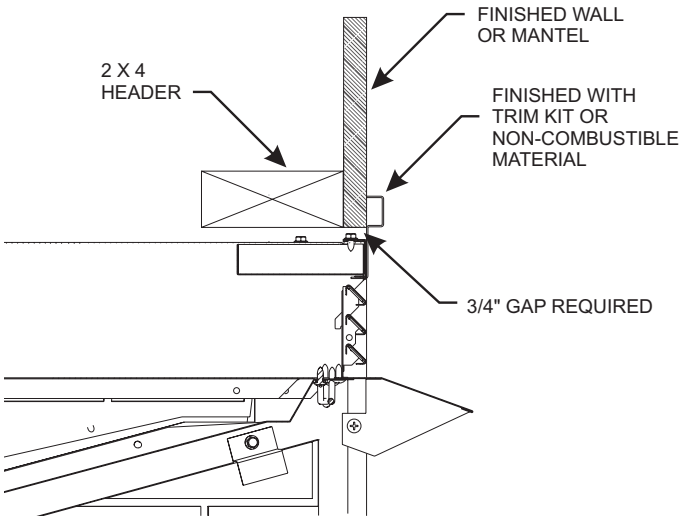

Figure 2a - Louvered Models

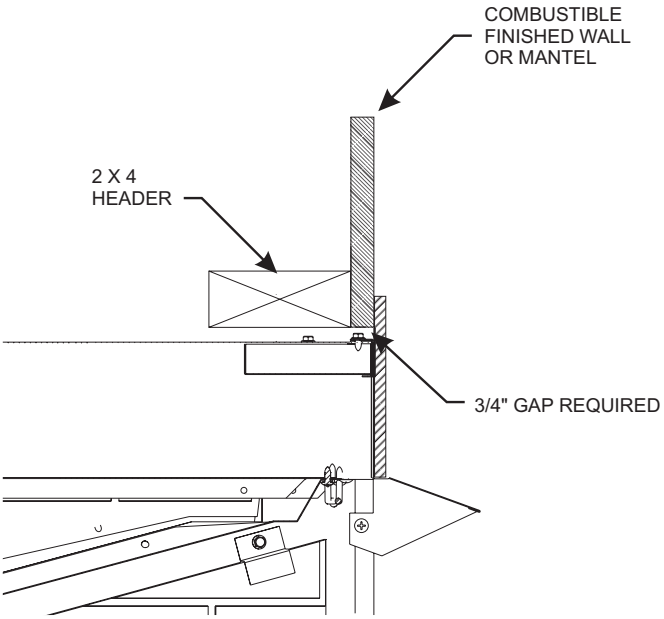

Figure 2b - Flush Models

CLEARANCES

Ceiling Clearances: The ceiling height should not be less than 42 inches from the top of the hood. **See Figure 3.**

Mantel Clearances: Vent free firebox models must use the hood supplied with the firebox, or one of the optional hood kits available for each model. If a combustible mantel is installed, it must meet the clearance requirements detailed below.

Grate Clearance: The minimum clearance between the front legs of the grate and front edge of the firebox is 2 inches.

Leave at least 36 inches clearance from the front of the firebox.

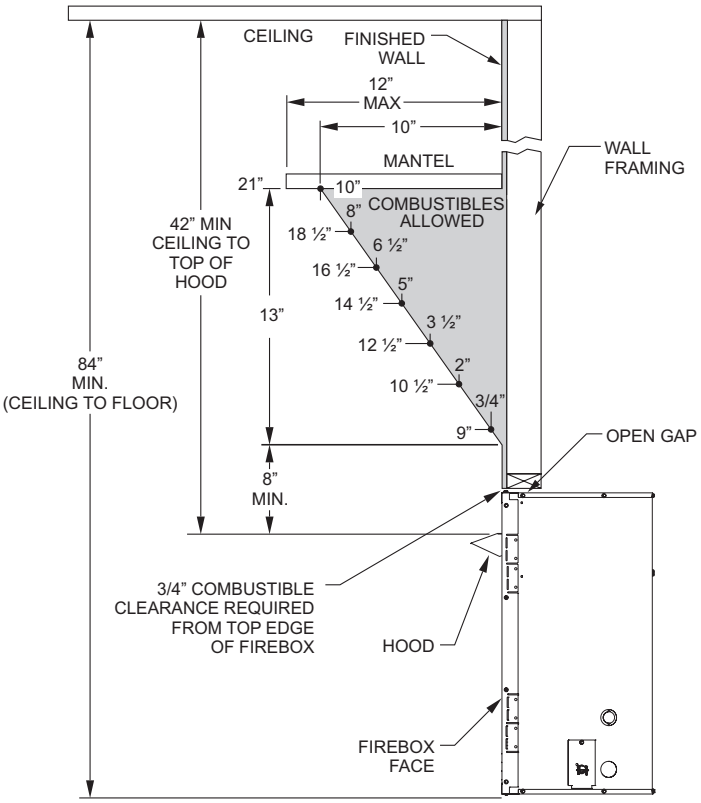

Figure 3 - Clearances to Combustibles

FIREBOX INSTALLATION INSTRUCTIONS

Any vent-free Gas Log Heater must be “For use with approved ANSI Z21.11.2 unvented room heater.”

Follow and complete the installation instructions of the gas log set and the requirements of this firebox.

Check all fittings for leaks before lighting the gas log set.

In planning the installation for the firebox, it is necessary to determine where the unit is to be installed and whether optional accessories are desired. Gas supply piping should also be planned at this time.

A Gas Shut Off Must Be In This Line.
The firebox can be mounted on any of these surfaces:

1. A flat hard combustible or non-combustible surface.
2. A raised platform of combustible or non-combustible material.
3. Recessed into the floor as illustrated by **Figure 4** (flush face), and **Figure 5** (louvered models).
4. Supported under all four corners of the firebox so that contact is made on all four perimeter edges on the bottom of the unit (Example: Four concrete masonry blocks).

If the firebox is installed directly on carpeting, tile or other combustible material other than wood flooring, it should be installed on a metal or wood panel extending the full width and depth of the unit.

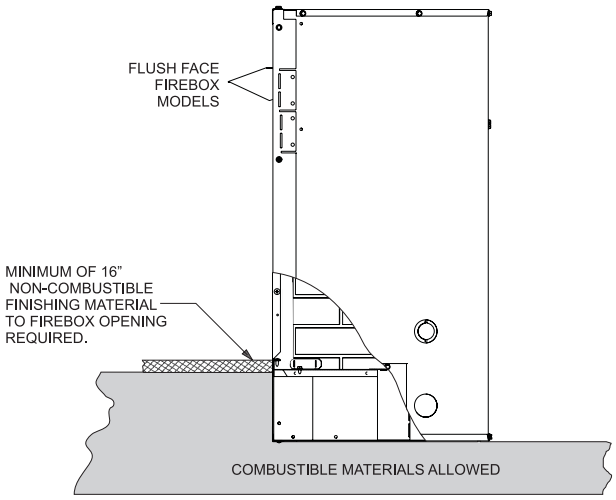

Figure 4

Deluxe Vent-Free Firebox Framing Dimensions (in inches)

Model	A	B	C
	Framing Height	Framing Width	Framing Depth
VFD32FB	33 3/4	35 1/2	16 1/4
VFD36FB	35 3/4	40 1/2	18 3/4
VFD42FB	35 3/4	44 1/2	18 3/4

Attention: Add 3-3/4 inches to "A" Dimension when using flush mantel base.

At this point, you should have decided what components to include in your installation, and where the firebox is to be located. If this has not been done, stop and consult your dealer for assistance with this planning.

Planning Your Installation
Please note that the optional VFA2 Fresh Air kit available for use with the Vent Free Firebox must be installed at the time of the initial installation. Refer to pages 10, 11 and 12 for detailed instructions for the air kit.
Accessory kits such as the FBB5 Blower kit, Trim kits, Mantels, Full Cabinet Mantels, plus other Decorative Frame, Hood, and Door accessory kits may be installed after the firebox is secured to the framed opening.
Refer to the instructions provided with each of the optional accessory kits for proper installation and operation.

Firebox Framing
Firebox framing can be built before or after the firebox is set in place. Framing should be positioned to accommodate wall covering and firebox facing material. The firebox framing should be constructed of 2 x 4 lumber or heavier. The framing headers must be at least 3/4 inch above the fireplace. Refer to **Figures 6 and 7** for firebox framing dimensions.

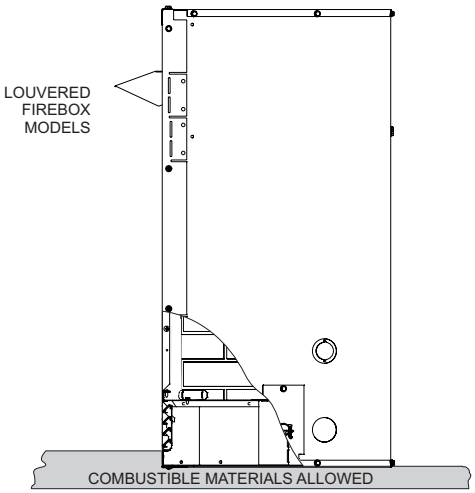

Figure 5

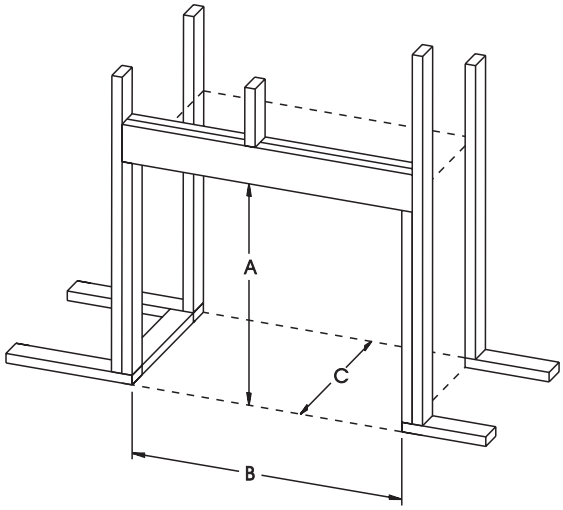

Figure 6

OUTER FIREBOX DIMENSIONS

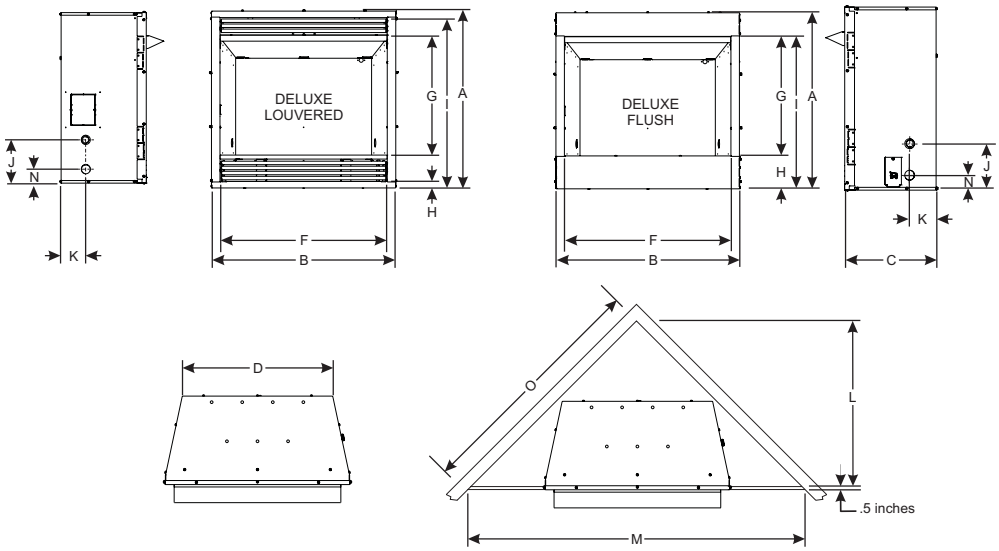

INNER FIREBOX DIMENSIONS

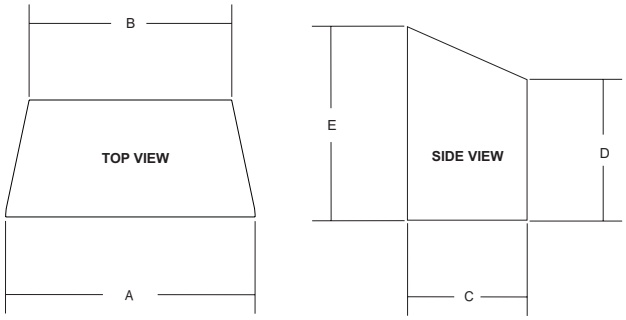

OUTER FIREBOX DIMENSIONS (in inches)						
INDEX LETTER	LOUVERED			FLUSH		
	VFD32	VFD36	VFD42	VFD32	VFD36	VFD42
A	33	35	35	33	35	35
B	35	40	44	35	40	44
C	16 1/2	19	19	16 1/2	19	19
D	27 7/8	31 7/8	35 7/8	27 7/8	31 7/8	35 7/8
F	31	36	40	31	36	40
G	22 1/4	24 1/4	24 1/4	22 1/4	24 1/4	24 1/4
H	1 3/16	1 3/16	1 3/16	6 1/8	6 1/8	6 1/8
I	31 1/2	33 1/2	33 1/2	28 3/8	30 3/8	30 3/8
J	8 5/16	8 5/16	8 5/16	8 5/16	8 5/16	8 5/16
K	4 3/4	4 3/4	4 3/4	4 3/4	4 3/4	4 3/4
L	30 1/4	34 5/8	36 5/8	30 1/4	34 5/8	36 5/8
M	60 3/8	69 1/8	73	60 3/8	69 1/8	73
N	2 11/16	2 11/16	2 11/16	2 11/16	2 11/16	2 11/16
O	42 5/8	48 7/8	51 3/4	42 5/8	48 7/8	51 3/4

INNER FIREBOX DIMENSIONS (in inches)			
INDEX LETTER	VFD32	VFD36	VFD42
WITHOUT BRICK			
A	31	36	40
B	25 3/16	29 3/16	33 3/16
C	14 1/8	16 1/2	16 1/2
D	18 11/16	20	20
E	22	24	24
WITH BRICK			
A	29 5/16	34 5/16	38 5/16
B	24	28	32
C	13 5/16	15 3/4	15 3/4
D	18 11/16	20	20
E	22	24	24

Figure 7
Firebox Dimensions

FIREBOX INSTALLATION INSTRUCTIONS

Locating Firebox

Place firebox in framing opening. Use the tabs on the side of the firebox to attach firebox to framing. Different tab locations can be used for finishing materials with thicknesses of 1/2 inch and 5/8 inch. **See Figure 8.**

Framing tabs should fit directly against framing material. Use at least one nail per bracket to secure in place.

Check squareness of the firebox prior to securing to framed opening. **See Figure 9.**

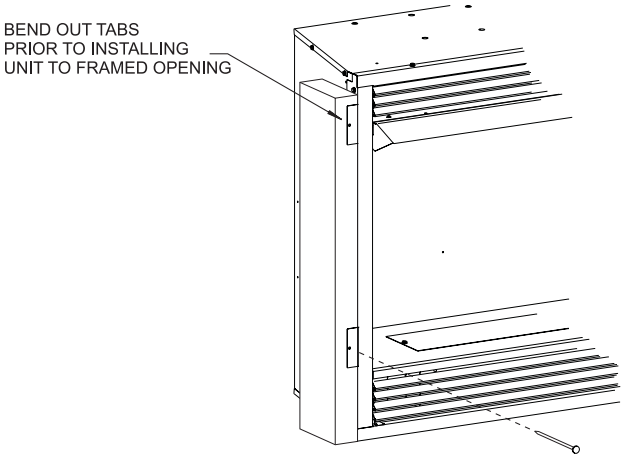

Figure 8

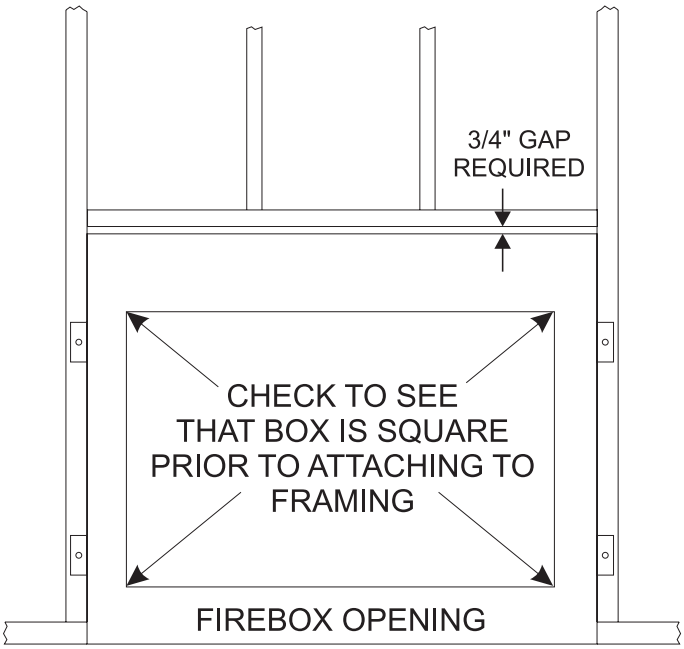

Figure 9

INSTALLING HOOD

A black hood that is furnished with each firebox (or optional hood) MUST be installed before the firebox is used. Failure to do so may create a possible fire hazard. The hood is located behind upper louver, or inside the firebox on flush face units. If brass, stainless steel, or hammered pewter hoods are desired, they can be purchased as an option. Attachment is the same as the standard black hood.

Flush Face Models

1. On flush face models, loosen the two screws (A) holding firebox top to face panel, then slide the hood flange between the firebox top and face panel and re-tighten the screws.
2. Install one screw at each end of the hood as shown (C).

Louvered Models

1. If you have a louvered model, remove upper louver.
2. Place the top hood flange on top of the firebox, then install three screws through the firebox top from below and screw into the pilot holes in the hood flange (B).
3. Install one screw at each end of the hood as shown (C).
4. Re-install louver.

CAUTION: The hood must be installed prior to operation of appliance. See Figure 10.

Flush Face Models

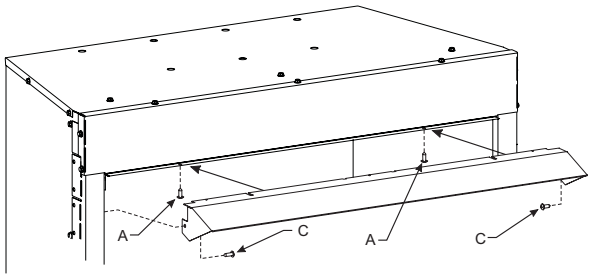

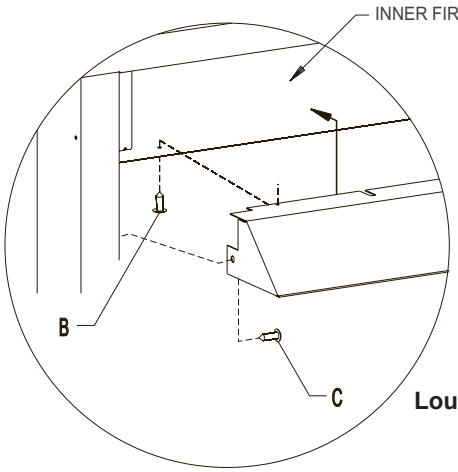

Louvered Models

Figure 10

INSTALLING HOOD

Extended Hoods

If your non-combustible facing material is over 1" in thickness that will be used to finish this firebox, an extended hood is available that will extend out 2" farther out into the room. Contact your local dealer for details.

VB4H32BL	Standard Black	VB4H36BL	Standard Black	VB4H42BL	Standard Black

Finishing

All joints (top, bottom and sides), where the wall or decorative facing material meets the firebox surround should be sealed with a non-combustible material.

Hearth extensions are recommended, but not required for these fireboxes.

GAS LINE CONNECTION

The firebox is designed to accept a 3/8-inch gas line for an approved vent-free gas logset. Have the line installed by a qualified service person in accordance with all building codes. Consult local building codes to properly size the gas supply line leading to the 3/8-inch hook-up at the unit. The state of Massachusetts requires that a flexible appliance connector cannot exceed three feet in length.

Gas access holes are provided on both sides of the firebox. **See Figure 11.** On models with refractory brick panels installed, carefully remove the knockout in the refractory brick panel using a large standard screwdriver and hammer. First, place screwdriver in groove next to plug and pry sideways to pop out main plug. Then remove the remaining concrete in hole with gentle tapping with ball peen hammer and/or screwdriver. A masonry drill and bit may also be used to create a clean hole for the gas line to pass through. **See Figure 12.**

When installing optional ceramic fiber side panels into firebox, lay panel on a flat surface. Remove the gas line knockout (round depression) in the appropriate side panel using a drill or utility knife.

After the brick panel knockout is removed, the firebox wrap may have a round metal knockout that must be removed also. Use a screwdriver to punch out the metal knockout.

Check gas type. Use only the gas type indicated on the gas log set rating plate. If the gas listed on the plate is not your type of gas supply, DO NOT INSTALL. Contact your dealer for proper model.

Always use an external regulator for all Propane fireboxes to reduce the supply tank pressure to a maximum of 14 inch w.c. This is in addition to the regulator fitted to the log set.

⚠ WARNING
Connection directly to an unregulated propane tank can cause explosion.

Install only a ANSI Z21.11.2 vent-free log set into this firebox.

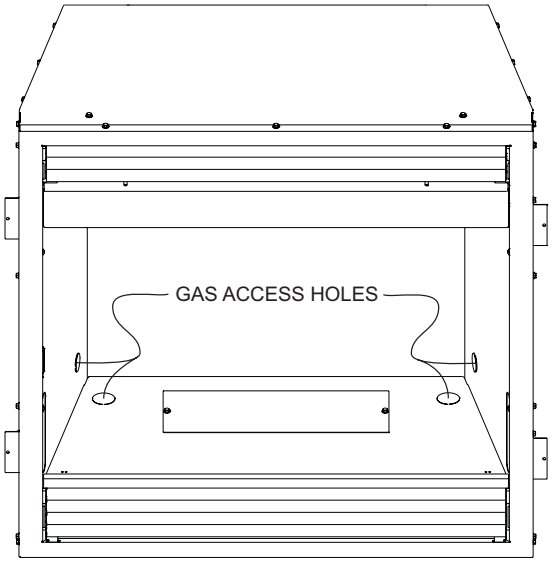

Figure 11

NOTE: When installing stainless steel or reflective decorative liner kits, gas lines must come through the bottom of the firebox. **See Figure 11.**

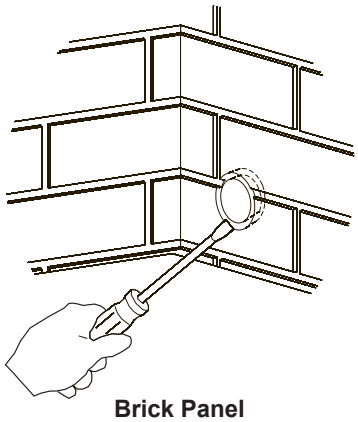

Brick Panel
Figure 12

OPTIONAL FBB5 SINGLE SPEED BLOWER INSTALLATION INSTRUCTIONS

Attention: Install blower assembly before connecting gas inlet supply line.

Wiring

The appliance, when installed, must be electrically grounded in accordance with local codes or, in the absence of local codes, with the *National Electrical Code, ANSI/NFPA 70*, if an external electrical source is utilized. **This appliance is equipped with a three-prong [grounding] plug for your protection against shock hazard and should be plugged directly into a properly grounded three-prong receptacle. Do not cut or remove the grounding prong from this plug.** For an ungrounded receptacle, an adapter, which has two prongs and a wire for grounding, can be purchased, plugged into the ungrounded receptacle and its wire connected to the receptacle mounting screw. With this wire completing the ground, the appliance cord plug can be plugged into the adapter and be electrically grounded.

⚠ CAUTION

Label all wires prior to disconnection when servicing controls. Wiring errors can cause improper and dangerous operation. Verify proper operation after servicing.

NOTE: Junction box on right side of firebox must be pre-wired at time of firebox installation for use with blower assembly. A standard wall ON/OFF wall switch or optional SCV1 Variable Speed Control Kit should be installed to activate power to the Firebox, and control the operation of the FBB5 Blower assembly. It is recommended that installation of the wiring be performed by a qualified electrician. **See Figure 13.**

1. If installed, turn OFF gas supply to firebox/gas log.
2. If applicable, turn OFF electric supply to firebox.

⚠ CAUTION

All wiring should be done by a qualified electrician and shall be in compliance with all local, city and state building codes. Before making the electrical connection, make sure that main power supply is disconnected. The appliance, when installed, must be electrically grounded in accordance with local codes, with the national electrical code ansi/nfpa 70 (latest edition).

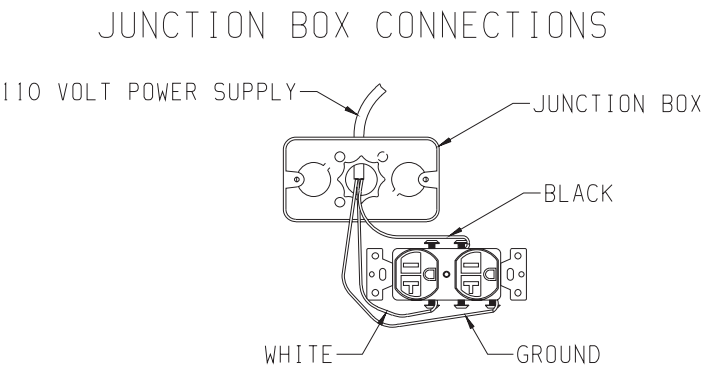

Figure 13

A factory installed junction box is located on the lower right side of the firebox. Wiring must be fed to the junction box and attached to the receptacle that is provided. From right side of the firebox, remove the screw securing the junction box assembly. Leave approximately 6 inches of wire in the junction box for connection.

Attach black wire to one side of the receptacle and white wire to opposite side of receptacle. The ground wire should be attached to the green (ground) screw.

Install the receptacle into the junction box. Attach cover plate.

Attention: If installed, do not damage gas inlet supply line when blower assembly is inserted into firebox. In some cases, removal the gas inlet supply line may be necessary.

3. Determine which type of firebox you have prior to installation. **See Figures 14 and 15**.

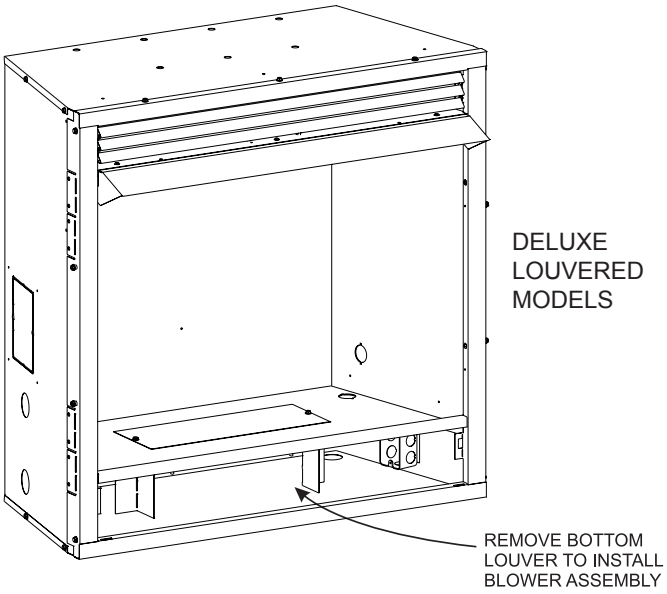

Figure 14

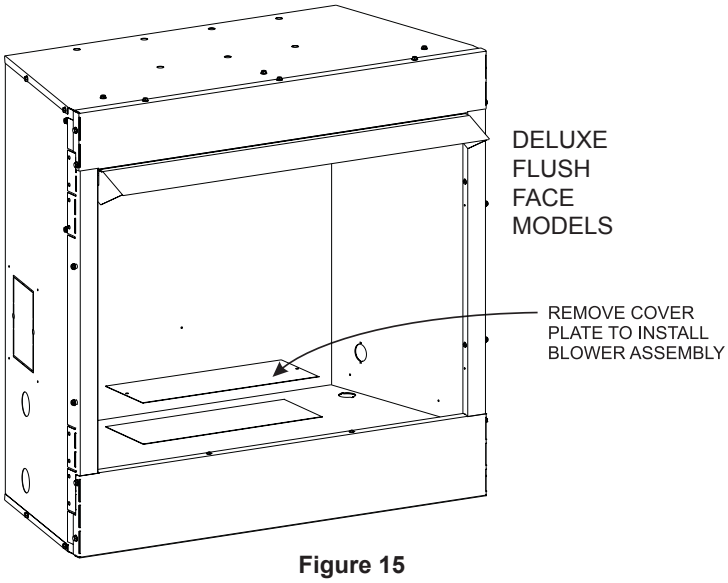

Figure 15

4. Remove air deflector by removing the four screws securing it to the blower assembly.

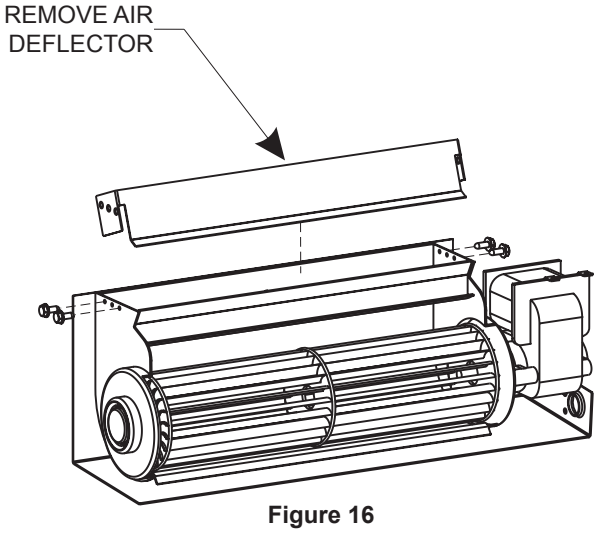

Figure 16

5. Insert blower assembly into interior, bottom of firebox. Position blower assembly so that you align the notch on back of blower assembly with the center screw on firebox back, then push the blower assembly against firebox back. The blower wheel must be centered with the back wall of the firebox. The magnets on the back and bottom of blower assembly will sufficiently hold blower assembly in place.
6. Push tab away with standard screwdriver on upper right firebox .
7. Next, find the fan control switch and wire assembly. Feed the wires through the hole at the top of the firebox, and secure the fan control switch with two #6 screws provided. **See Figure 17.**

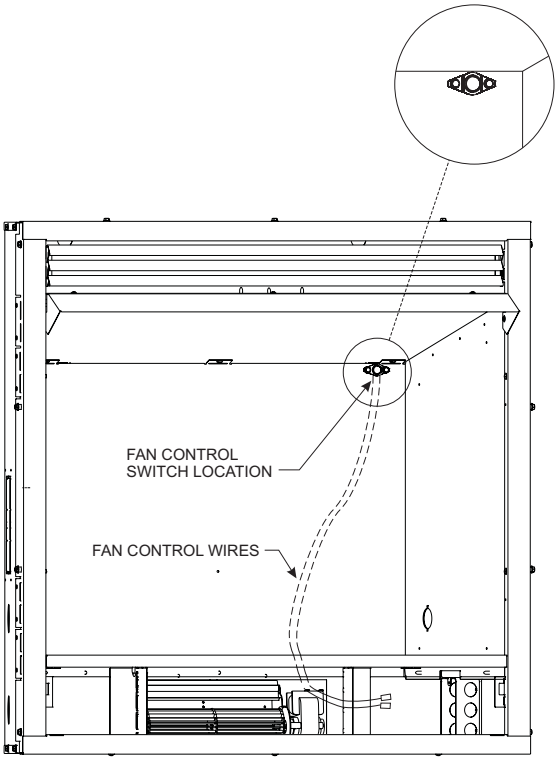

Figure 17

8. The fan control wires will slide down between the firebox and outer wrap near the blower assembly. **See Figure 17**.
9. One fan control wire will have a 1/4 inch female terminal that must be attached to the open terminal on the blower motor. **See Figure 20, Connection A.**
10. The other fan control wire has a 1/4 inch male terminal. Attach this terminal to the open terminal on the blower power cord. **See Figure 20, Connection B.**
11. Route the wires away from moving parts of the blower assembly and retain wires together near the blower motor using the plastic purse clip provided.
12. To complete the installation, plug the power cord into the junction box receptacle at the right rear corner of the firebox outer wrap. **See Figure 19.**
13. If room permits, the power cord can be located from the outside of the unit looking through the junction box access hole (with the junction box removed), then plug up the power cord before reinstalling the pre-wired junction box.
14. Once all connections are made electrically, it is recommended that you test the blower fan control operation by turning on power to the blower **(CAUTION: 110 Volt).** Then apply heat to the fan control switch inside the firebox with a lighter or match until blower is activated. Once blower is activated, check for proper operation. Do not place hands near blower assembly or other wiring while power is on.
15. Replace blower access plate and/or reinstall the brick liner panels if provided.
16. This completes the installation of the optional FBB5 Blower kit accessory.

NOTE: This blower is equipped with a heat activated fan control switch. Blower will operate when the firebox warms up, and will turn off automatically when the firebox cools down.

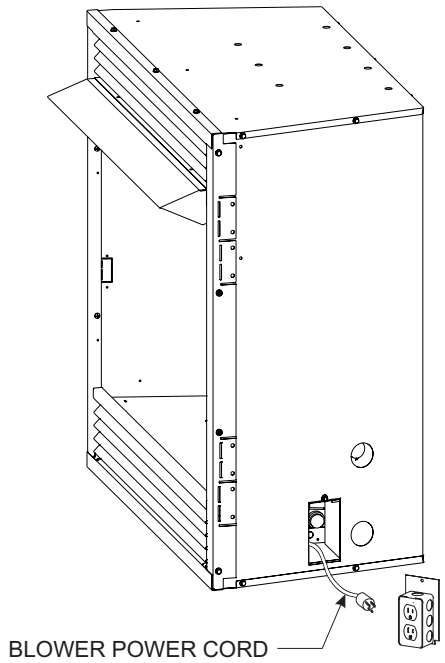

Figure 18

OPTIONAL FBB5 SINGLE SPEED BLOWER INSTALLATION INSTRUCTIONS

Blower Motor
The blower motor does not have oiling holes. Do not attempt to oil the blower motor.

Blower Wheels
The blower wheels will collect lint and could require periodic cleaning. If the air output decreases or the noise level increases, it indicates a dirty blower wheel. Remove fan and clean blower wheels.

⚠ WARNING

Unplugging of blower accessory will not stop the heater from cycling. To turn off gas to the heater (millivolt model): push in gas control knob slightly and turn clockwise to OFF. Do not force. To turn off gas on direct ignition model, turn gas line valve to OFF.

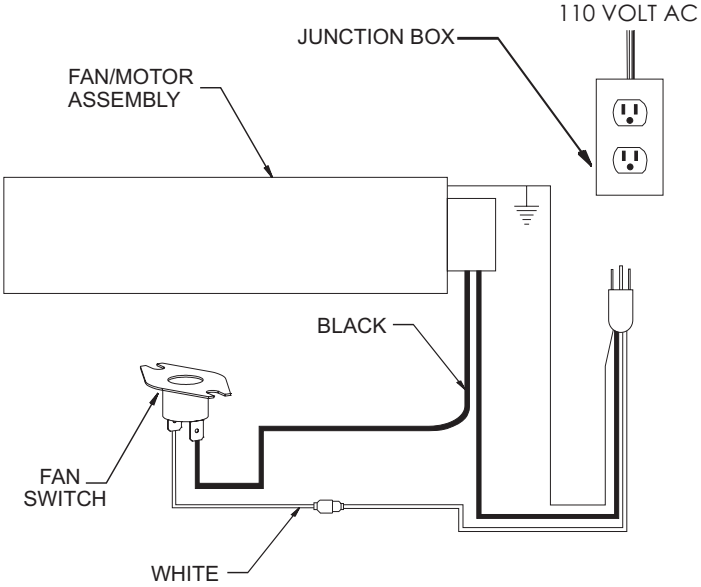

Figure 19

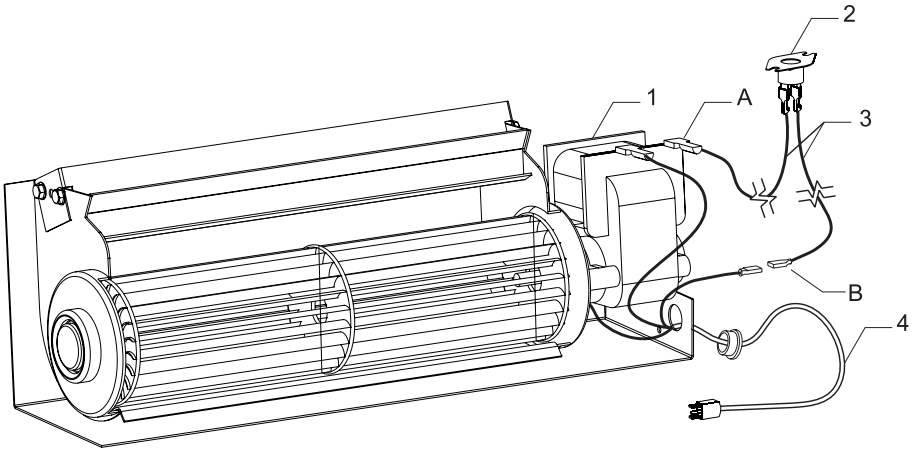

1	R7731	BLOWER ASSEMBLY
2	R8199	FAN CONTROL SWITCH
3	R8147	WIRE ASSEMBLY
4	R7615	CORDSET

Figure 20

JUNCTION BOX WIRING INSTALLATION INSTRUCTIONS

⚠ CAUTION

All wiring should be done by a qualified electrician and shall be in compliance with all local, city and state building codes. Before making the electrical connection, make sure that main power supply is disconnected. The appliance, when installed, must be electrically grounded in accordance with local codes or, in the absence of local codes, with the national electrical code ansi/nfpa 70 (latest edition)

A factory installed junction box is located on the lower right hand side of the firebox. Wiring must be fed to the junction box and attached to the receptacle that is provided. Remove the knockout in the installed junction box to accept wiring into the junction box. Install a UL listed cable clamp (not supplied) in the knockout hole. Leave approximately 6 inches of wire in the junction box for connection.

Attach black wire to one side of the receptacle and white wire to opposite side of receptacle. The ground wire should be attached to the green (neutral) screw.

Install the receptacle into the junction box. Attach cover plate.

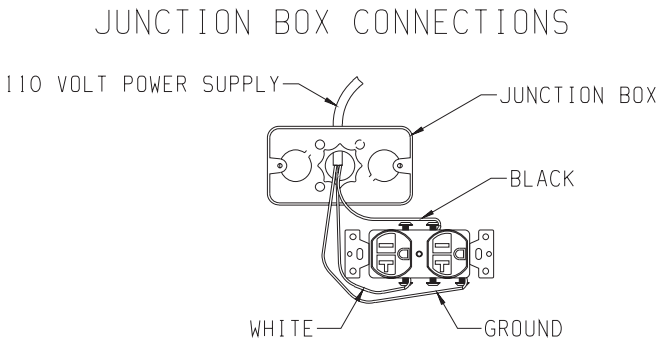

Figure 21

MAINTENANCE

Keep the control compartment, logs and burner area surrounding the logs clean by vacuuming or brushing area at least twice a year.

THE LOGS CAN GET VERY HOT – HANDLE ONLY WHEN COOL.

Always turn off gas to the pilot before cleaning. For relighting, refer to lighting instructions located on the log set.

Never obstruct the flow of the combustion and ventilation air. Keep the front of the firebox clear of all obstacles and materials.

Screens must be closed during operation.

PARTS LIST

INDEX NO.	PART NUMBER			DESCRIPTION
	VFD32	VFD36	VFD42	
1	17169	18807	17187	UPPER LOUVER
2	17170	18808	17188	LOWER LOUVER
3	39520	39520	39520	JUNCTION BOX ASSEMBLY
4	R3492	R3492	R3492	RECEPTACLE
5	R3491	R3491	R3491	COVER, JUNCTION BOX
6	27338	27338	27338	BRACKET, TOP BRICK RETAINER (QUANTITY 2)
7	19401	19401	19401	BRACKET, BOTTOM BRICK RETAINER (QUANTITY 2)
8	R10388	R10392	R10392	BRICK PANEL RIGHT - REFRACTORY BRICK
8	31675	31678	31678	BRICK PANEL RIGHT - FIBER BRICK
9	R10386	R10390	R10394	BRICK PANEL BACK - REFRACTORY BRICK
9	31676	31679	31680	BRICK PANEL BACK - FIBER BRICK
10	R10387	R10391	R10391	BRICK PANEL LEFT - REFRACTORY BRICK
10	31674	31677	31677	BRICK PANEL LEFT - FIBER BRICK
11	39517	39518	39519	HOOD
12	R7051	R7052	R7053	ROD, SCREEN (QUANTITY 2)
13	R8137	R8148	R8148	SCREEN CURTAIN (QUANTITY 2)
14	39492	39494	39496	FACE ASSEMBLY - LOUVERED
15	39479	39484	39489	FACE ASSEMBLY - FLUSH
16	38973	38973	38973	BLOWER COVER PLATE

PARTS VIEW

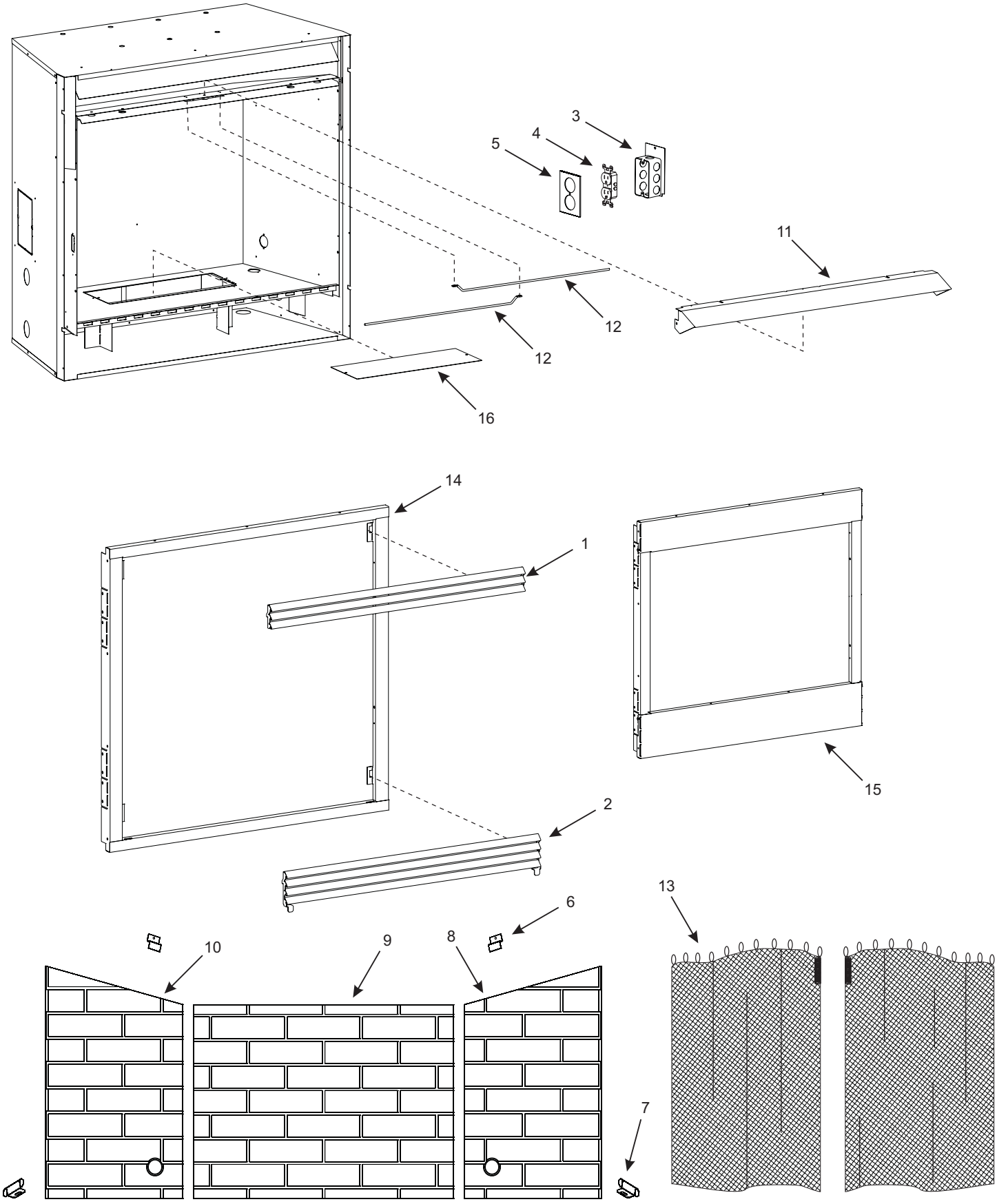

ACCESSORIES

Accessory	Description	Model Numbers
Fan Kit	Designed to provide forced air flow.	FBB5
Variable Speed Control Kit	Wall mounted variable speed control for use with FBB5 blower	SCV-1
Brick Liners	Deluxe Firebox	Contact dealer for all available optional liner kits
Fresh Air Kit	Deluxe and Premium Fireboxes	VFA2
Frame Kits	3-Piece Frame Kits Black, Stainless Steel or Hammered Pewter	Contact dealer for all available optional frame kits
Standard Hood	Brass hood = BR Stainless Steel = SS Hammered Pewter = HP	Contact dealer for all available optional hood accessories

ACCESSORIES (CONT'D)

Accessory	Description	Model Numbers
Extended 4" Hoods 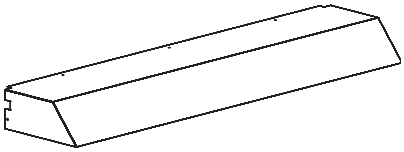	Extended hoods that extend out 2" farther than the standard hoods, to accommodate thicker surround materials. Available as optional kits in Brass, Hammered Pewter, and Stainless Steel finishes.	Contact dealer for all available optional hood accessories
Louvers 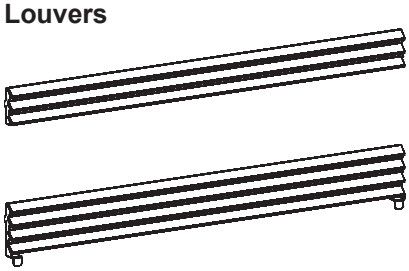	Styles include Slat, Mission, Arch, and Leaf Patterns. Available as optional kits in Brass, Hammered Pewter, and Stainless Steel finishes.	Contact dealer for all available optional louver accessories
Bottom Trim Strip 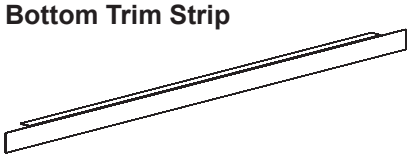	Available as optional kits in Brass, Hammered Pewter, and Stainless Steel finishes.	Contact dealer for all available optional trim accessories
Decorative Door Kits	Available as optional kits in Brass, Hammered Pewter, and Stainless Steel finishes.	Contact dealer for all available optional frame kit accessories
Decorative Frame Kits	Available as optional kits in Brass, Hammered Pewter, and Stainless Steel finishes.	Contact dealer for all available optional decorative door kit accessories

MASTER PARTS DISTRIBUTOR LIST

To Order Parts Under Warranty, please contact your local Empire dealer. See the dealer locator at www.empirecomfort.com. To provide warranty service, your dealer will need your name and address, purchase date and serial number, and the nature of the problem with the unit.
To Order Parts After the Warranty Period, please contact your dealer or one of the Master Parts Distributors listed below. This list changes from time to time. For the current list, please click on the Master Parts button at www.empirecomfort.com. Please note: Master Parts Distributors are independent businesses that stock the most commonly ordered Original Equipment repair parts for Heaters, Grills, and Fireplaces manufactured by Empire Comfort Systems Inc.

Dey Distributing
1401 Willow Lake Boulevard
Vadnais Heights, MN 55101

Phone: 651-490-9191
Toll Free: 800-397-1339
Website: www.deydistributing.com
Parts: Heater, Hearth and Grills

F. W. Webb Company
200 Locust Street
Hartford, CT 06114

Phone: 860-722-2433
Toll Free: 800-243-9360
Fax: 860-293-0479
Toll Free Fax: 800-274-2004
Websites: www.fwwebb.com & www.victormfg.com
Parts: Heater, Hearth and Grills

East Coast Energy Products
10 East Route 36
West Long Branch, NJ 07764

Phone: 732-870-8809
Toll Free: 800-755-8809
Fax: 732-870-8811
Website: www.eastcoastenergy.com
Parts: Heater, Hearth and Grills

HOW TO ORDER REPAIR PARTS

Parts Not Under Warranty

Parts can be ordered through your Service Person, Dealer, or a Master Parts Distributor. See this page for the Master Parts Distributors list. For best results, the **service person or dealer** should order parts through the distributor. Parts can be shipped directly to the **service person/dealer**.

Warranty Parts

Warranty parts will need a proof of purchase and can be ordered by your Service Person or Dealer. Proof of purchase is **required** for warranty parts.

All parts listed in the Parts List have a Part Number. When ordering parts, first obtain the Model Number and Serial Number from the name plate on your equipment. Then determine the Part Number (**not** the Index Number) and the Description of each part from the following illustration and part list. Be sure to give all this information . . .

Appliance Model Number _____ Part Description _____

Appliance Serial Number _____ Part Number _____

Type of Gas (Propane or Natural) _____

Do not order bolts, screws, washers or nuts. They are standard hardware items and can be purchased at any local hardware store.

Shipments contingent upon strikes, fires and all causes beyond our control.

WARRANTY

Empire Comfort Systems Inc. warranties this hearth product to be free from defects at the time of purchase and for the periods specified below. Hearth products must be installed by a qualified technician and must be maintained and operated safely, in accordance with the instructions in the owner's manual. This warranty applies to the original purchaser only and is not transferable. All warranty repairs must be accomplished by a qualified gas appliance technician.

Limited Lifetime Parts Warranty with a Five-Year Limited Labor Warranty – Combustion Chamber and Heat Exchanger

If the combustion chamber or heat exchanger (see parts list) fails because of defective workmanship or material, Empire will repair or replace at Empire's option.

Within five years from the date of purchase, Empire will pay reasonable labor to have the defective part repaired or replaced at Empire's option.

Limited Five-Year Parts & Labor Warranty – All Other Components
(Except Remote Controls, Thermostats, Accessories and Replacement Parts)

Should any part fail because of defective workmanship or material within five years from the date of purchase, Empire will repair or replace at Empire's option.

Within five years from the date of purchase, Empire will pay reasonable labor to have that defect repaired at Empire's option.

Limited One-Year Parts Warranty – Remote Controls, Thermostats, Accessories, and Parts

Should any remote control, thermostat, accessory, or other part fail because of defective workmanship within one year from the date of purchase, Empire will repair or replace at Empire's option.

Duties Of The Owner

The appliance must be installed by a qualified installer and operated in accordance with the instructions furnished with the appliance.

A bill of sale, cancelled check, or payment record should be kept to verify purchase date and establish warranty period.

Ready access to the appliance for service.

What Is Not Covered

Damages that might result from the use, misuse, or improper installation of this appliance.

Travel, diagnostic costs and freight charges on warranted parts to and from the factory.

Claims that do not involve defective workmanship or materials.

Unauthorized service or parts replacements.

Removal and reinstallation cost.

Inoperable due to improper or lack of maintenance.

How To Get Service

To make a claim under this warranty, please have your receipt available and contact your installing dealer. Provide the dealer with the model number, serial number, type of gas, and purchase verification. The installing dealer is responsible for providing service and will contact the factory to initiate any warranted parts replacements. Empire will make replacement parts available at the factory. Shipping expenses are not covered.

If, after contacting your Empire dealer, service received has not been satisfactory, contact: Consumer Relations Department, Empire Comfort Systems Inc., PO Box 529, Belleville, Illinois 62222, or send an e-mail to info@empirecomfort.com with "Consumer Relations" in the subject line.

Your Rights Under State Law

This warranty gives your specific legal rights, and you may also have other rights, which vary from state to state.

Empire Comfort Systems Inc.
Belleville, IL

If you have a general question about our products, please e-mail us at info@empirecomfort.com.

If you have a service or repair question, please contact your dealer.

www.empirecomfort.com