This Owner's Manual is provided and hosted by Appliance Factory Parts.

Appliance Factory Parts
Experts in BBQ, Humidifier, & Appliance Parts
1-800-955-7075

MAJESTIC STMHK18NG Owner's Manual

Shop genuine replacement parts for MAJESTIC STMHK18NG

Find Your MAJESTIC Fireplace Parts - Select From 585 Models

-------- Manual continues below --------

HEARTH & HOME technologies

Installation Instructions

Models:
MHK18NG
MHK24NG
STMHK18NG
STMHK24NG
Fireside Burner/Hearth Kits
For Natural Gas Use Only

Installation and service of this appliance should be performed by qualified personnel. Hearth & Home Technologies suggests NFI certified or factory-trained professionals, or technicians supervised by an NFI certified professional.

Check with your local building code agency before you begin installation to ensure compliance with local codes, including the need for permits and follow-up inspections. If you encounter any problems regarding code approvals, or if you need clarification of any of the instructions contained here, contact the Technical Services Dept., Hearth & Home Technologies Inc., phone 1-888-427-3973 or 1-800-927-6841.

CAUTION

DO NOT DISCARD THIS MANUAL

- Important operating and maintenance instructions included.
- Read, understand and follow these instructions for safe installation and operation.
- Leave this manual with party responsible for use and operation.

DO NOT DISCARD

⚠ WARNING

If the information in these instructions is not followed exactly, a fire may result causing property damage, personal injury, or death.

- Do not store or use gasoline or other flammable vapors and liquids in the vicinity of this or any other appliance.
- **What to do if you smell gas:**
  - Do not try to light any appliance.
  - Do not touch any electrical switch. Do not use any phone in your building.
  - Immediately call your gas supplier from a neighbor's phone. Follow the gas supplier's instructions.
  - If you cannot reach your gas supplier, call the fire department.
- Installation and service must be performed by a qualified installer, service agency, or the gas supplier.

⚠ WARNING

HOT! DO NOT TOUCH.
SEVERE BURNS MAY RESULT.
CLOTHING IGNITION MAY RESULT.

Glass and other surfaces are hot during operation and cool down.

- Keep children away.
- CAREFULLY SUPERVISE children in same room as appliance.
- Alert children and adults to hazards of high temperatures.
- Keep clothing, furniture, draperies and other combustibles away.

In the Commonwealth of Massachusetts:

- This appliance must be installed by a licensed plumber or gas fitter.
- The chimney flue damper, when used with gas logs, will be welded open or completely removed.
- A CO detector shall be installed in the room where the appliance is installed.

Read this manual before installing or operating this appliance.
Please retain this owner's manual for future reference.

Congratulations

Congratulations on selecting a Hearth & Home Technologies gas log set—an elegant and clean alternative to burning wood. The Hearth & Home Technologies gas log set you have selected is designed to provide the utmost in safety, reliability, and efficiency.

As the owner of this new gas log set, you'll want to read and carefully follow all of the instructions contained in this owner's manual. Pay special attention to all cautions and warnings.

This owner's manual should be retained for future reference. We suggest you keep it with your other important documents and product manuals.

The information contained in this owner's manual, unless noted otherwise, applies to all models and gas control systems.

Your new gas log set will give you years of durable use and trouble-free enjoyment. Welcome to the Hearth & Home Technologies family of appliance products!

Homeowner Reference Information

We recommend that you record the following pertinent information about your gas log set:

Model Name: _____ Date purchased/installed: _____

Serial Number: _____ Location on appliance: _____

Dealership purchased from: _____ Dealer phone: _____

Notes: _____

_____

_____

Listing Label Information/Location

The model information regarding your specific gas log set can be found on the rating plate.

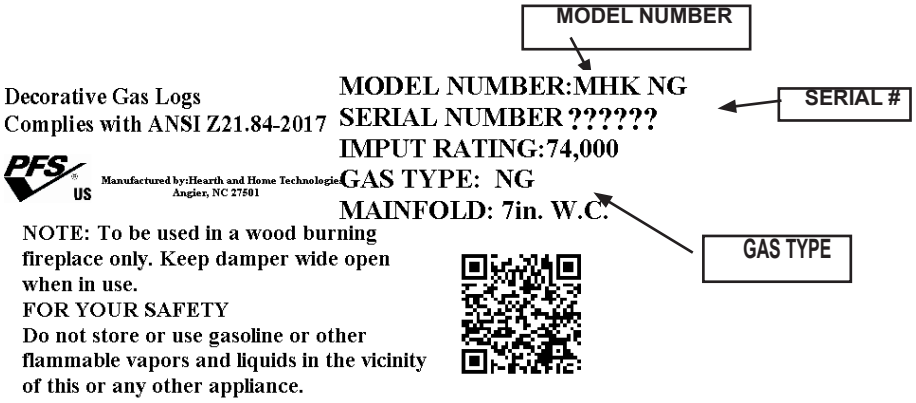

Table of Contents

1 Listing and Code Approvals
- A. Appliance Certification. 4
- B. Table 1 4
- C. Table 2 5

2 Getting Started
- A. Size of Firebox 6
- B. Negative Pressure 6
- C. Tools and Supplies Needed 6
- D. Inspect the Appliance and Components 6
- E. Components of the Gas Hearth Kit 7

3 Appliance Preparation
- A. Gas Supply Connection 8
- B. Convert to Left Side Gas Piping 8
- C. Gas Pressure 9

4 Installation Instructions
- A. Install the Damper Stop 10
- B. Install the Burner/Pan Assembly 10
- C. Install the Grate 10
- D. Place Sand and Rockwool 10
- E. Install the Logs. 11
- F. Adjust the Burner Flame 11
- G. Inspect the Venting System 11

5 Operating Instructions
- A. Lighting Instructions 12
- B. Glass Doors 13
- C. Important Safeguards 13

6 Maintaining and Servicing the Appliance
- A. Servicing Your Appliance. 14
- B. Cleaning Your Appliance 14
- C. Annual Inspection. 14
- D. Troubleshooting. 15

7 Reference Materials
- A. Replacement Parts. 16-17
- B. Warranty. 18-19
- C. Contact Information. 20

1 Listing and Code Approvals

A. Appliance Certification

The Gas Log Hearth Kits have been tested and listed in the U.S. in accordance with **ANSI Z21.84-2017** (Gas Log Set). They have been listed by PFS Test Labs for installation and operation in the United States and Canada as described in these Installation and Operating Instructions. All components are UL, OMNI or CSA safety certified.

Check with your local building code agency prior to installing this appliance to ensure compliance with local codes, including the need for permits and follow-up inspections. In the absence of local codes, comply with the **National Fuel Gas Code, ANSI Z223.1-Latest Edition** in the U.S. If any assistance is required during installation, please contact your local dealer or call the Technical Services Department at 1-888-427-3973 or 1-800-927-6841.

California Proposition 65 Warning

WARNING: This product can expose you to chemicals, including carbon black, which is known in the state of California to cause cancer and chromium, which is known in the state of California to cause birth defects or other reproductive harm.

For more information go to: www.P65Warnings.ca.gov

WARNING

Fire Risk

Exhaust Fumes Risk

- Do NOT use this appliance as a "vent-free heater.

The flue must be permanently open. Refer to Table 1.

B. Table 1

Product		MHK18NG	MHK24NG	STMHK18NG	STMHK24NG
Inlet BTU/KW/HR	Nat	74,000/21.7	84,000/24.6	65,000/19	75,000/22
Max. Inlet Pressure IN. WC/KPa	Nat	10.0/.052	10.0/.052	10.0/.052	10.0/.052
Min. Inlet Pressure WC/KPa	Nat	3.5/.018	3.5/.018	3.5/.018	3.5/.018
Orifice Size In./mm	Nat	(#26) .147	(#20) .161	(#30) .128	(#28) .141
Minimum Fireplace Opening Size In./cm	Front	28/71.1	34/86.4	28/71.1	34/86.4
	Rear	16/40.6	18/45.7		
	Depth	14/35.6	16/40.6	16/40.6	16/40.6
	Height	16/40.6	18/45.7	18/45.7	18/45.7

C. Table 2

For Masonry Built Fireplaces Free Opening Area of Chimney Damper For Venting Combustion Products From Decorative Appliances For Installation In Solid Fuel Burning Fireplaces.

Appliance Input Rate (kBTU/hr)

Masonry Built	30	40	50	60	70	80	90	100	110	120
Chimney Height * (ft)	**Minimum Opening** (sq. in.)**									
6	25.7	33.8	41.7	49.2	56.6	64.0	71.4	78.8	86.2	93.5
8	23.7	31.2	38.7	45.5	52.4	59.7	66.9	74.1	81.3	88.6
10	21.7	28.7	35.2	41.7	48.2	54.3	60.2	66.1	72.0	77.9
15	19.9	26.1	32.0	37.7	43.2	48.8	54.1	59.4	64.6	69.9
20	18.5	23.7	28.8	34.3	39.8	44.4	49.1	53.8	58.4	63.0
30	16.9	21.6	26.5	31.2	35.9	40.3	44.5	48.6	52.7	56.6

* Height is from hearth to top of chimney and the minimum height is 10 feet.
** Chart shows minimum opening (sq. in.) for the given height and input rate.

For Factory Built Fireplaces Free Opening Area of Chimney Damper For Venting Combustion Products From Decorative Appliances For Installation In Solid Fuel Burning Fireplaces.

Appliance Input Rate (kBTU/hr)

Factory Built	30	40	50	60	70	80	90	100	110	120	
Chimney Height * (ft)	**Minimum Opening** (sq. in.)**										Max. Input ***
10	16.6	22.1	28.3	35.3	44.2	——	——	——	——	——	77.6
15	12.6	17.3	21.2	26.4	32.2	38.5	45.4	——	——	——	98.2
20	10.8	14.5	18.1	22.1	26.4	31.2	37.4	43.0	——	——	114.2
25	9.6	12.6	15.9	18.1	22.9	27.3	31.2	36.3	43.0	50.3	121.0
30	9.1	11.3	14.5	17.3	20.4	24.6	28.3	33.2	37.4	44.2	130.1
35	8.0	10.8	13.2	15.9	18.9	22.1	25.5	30.2	34.2	39.6	141.2
40	7.5	10.2	12.6	15.2	18.1	20.4	23.8	27.3	31.5	35.3	158.5

* Height is from hearth to top of chimney and the minimum height is 10 feet.
** Chart shows minimum opening (sq. in.) for the given height and input rate.
*** Column marked "Max. input" corresponds to the maximum allowable input rate (kBTU/hr) for the given height.

2 Getting Started

A. Size of Firebox

See Table 1 in Section 1.B.

B. Negative Pressure

Negative pressure results from the imbalance of air available for the fireplace to operate properly. Causes for this imbalance include:

- Exhaust fans (kitchen, bath, etc.).
- Range hoods.
- Combustion air requirements for furnaces, water heaters and other combustion appliances.
- Clothes dryers.
- Location of return-air vents to furnace or air conditioning.
- Imbalances of the HVAC air handling system.
- Upper level air leaks: recessed lighting, attic hatch opening, duct leaks.

C. Tools and Supplies Needed

Tools and supplies normally required for installation:

Pliers

Phillips screwdriver

Tape measure

Crescent wrenches

Gas shutoff valve

Non-corrosive leak check solution

3/4 in. wrench, 7/16 in. wrench

D. Inspect the Appliance and Components

- Remove the contents from the carton. Attached to the burner are tags identifying the manufacturer name, serial number, model number (including gas log size), BTU ratings, gas type, etc.
- Review the attached tags before proceeding. Ensure that all minimum fireplace dimension requirements are achieved using Table 1 in Section 1.B. See Figure 2.1. Ensure the gas type provided in the fireplace coincide with the gas type marked on the tag.

Figure 2.1 Measure Firebox

CAUTION

Sharp Edges

- Wear protective gloves and safety glasses during installation.

WARNING

Asphyxiation Risk

This appliance produces carbon monoxide (CO).

- The free opening areas (in square inches) of the chimney damper as shown in C. Table 2 must be met.
- User must make sure damper is locked open.
- The installer is responsible to ensure proper ventilation of flue gases before appliance is used.

Fire needs to draft properly for safe operation.

WARNING

Hearth & Home Technologies disclaims any responsibility for, and the warranty will be voided by, the following actions:

- Installation and use of any damaged appliance or vent system component.
- Modification of the appliance or vent system.
- Installation other than as instructed by Hearth & Home Technologies.
- Improper positioning of the gas logs or the glass door.
- Installation and/or use of any component part not approved by Hearth & Home Technologies.

Any such action may cause a fire hazard.

⚠ WARNING

Inspect appliance and components for damage. Damaged parts may impair safe operation.

- Do NOT install damaged components.
- Do NOT install incomplete components.
- Do NOT install substitute components.

Report damaged parts to dealer.

E. Components of the Gas Hearth Kit

The Burner/Hearth Kit consists of the following:

- Burner/Pan Assembly
- Grate Assembly
- Glowing Embers
- Sand
- Lava Rock
- Damper Stop
- Aluminum Tubing Assembly
- Brass Elbow Connector
- Brass Orifice & Cap
- Log Set (sold separately)

⚠ WARNING

Shock Risk
Fire Risk

Use ONLY optional accessories approved for this appliance.

- Using non-listed accessories voids warranty.
- Using non-listed accessories may result in a safety hazard.
- Only Hearth & Home Technologies approved accessories may be used safely.

⚠ WARNING

Keep appliance dry.

- Mold or rust may cause odors.
- Water may damage controls.

⚠ WARNING

Do NOT use this appliance if any part has been under water. Immediately call a qualified service technician to inspect the appliance and to replace any part of the control system and any gas control which has been under water.

⚠ WARNING

Improper installation, adjustment, alteration, service or maintenance can cause injury or property damage. Refer to the owner's information manual provided with this appliance. For assistance or additional information consult a qualified installer, service agency or the gas supplier.

3 Appliance Preparation

Note: Have the gas supply line installed in accordance with local building codes, if any. If not, follow **ANSI 223.1**. Installation should be done by a qualified installer approved and/or licensed as required by the locality. (In the Commonwealth of Massachusetts installation must be performed by a licensed plumber or gas fitter.)

A. Gas Supply Connection

Ensure fittings are of the appropriate size and type on the gas line connection. If the tubing has to be cut to length be sure to use the proper cutting and flaring tool. Also, be careful not to crimp the tubing while bending. If the tubing becomes crimped, do not use for installation.

⚠ WARNING

Gas Leak Risk

- Support control when attaching pipe to prevent bending gas line.

Joint compound or Teflon tape must be used on all threaded male connections to ensure a tight seal.

⚠ WARNING

Fire Risk
Explosion Risk
Personal Injury Risk

An explosion could occur if a connection is made directly to an unregulated propane (LP) tank.

Note: An individual manual shutoff valve (not supplied) is required when installing this appliance. The manual shutoff valve must be located in an easily accessible area, no more than 6 feet from the appliance.

Note: A listed (and Commonwealth of Massachusetts approved) 1/2 in. (13 mm) T-handle manual shut-off valve and flexible gas connector are connected to the 1/2 in. (13 mm) control valve inlet.

- **If substituting for these components, please consult local codes for compliance.**

⚠ WARNING

Fire Risk
Explosion Risk

Verify inlet pressures.

- High pressure may cause overfire condition.
- Low pressure may cause explosion.

Install regulator upstream of valve if line pressure is greater than 1/2 psig.

B. Convert to Left Side Gas Piping

- Remove the brass elbow from the right side.
- Remove the cap from the left side.

Note: Prior to installing the fittings, use Teflon tape or joint compound on the male threads.

- Replace the cap on the opposite end of the burner tube.
- Install the brass elbow on the left side of the burner.

⚠ WARNING

Fire Risk
Explosion Risk

- Gas build-up during line purge may ignite.
- Purge should be performed by qualified technician.
- Ensure adequate ventilation.
- Ensure there are no ignition sources such as sparks or open flames.

C. Gas Pressure

Proper input pressures are required for optimum appliance performance. Gas line sizing requirements need to be made following **NFPA51**.

⚠ WARNING

Fire Risk
Explosion Risk

High pressure will damage valve.

- Disconnect gas supply piping BEFORE pressure testing gas line at test pressures above 1/2 psig.
- Close the manual shutoff valve BEFORE pressure testing gas line at test pressures equal to or less than 1/2 psig.

⚠ WARNING

CHECK FOR GAS LEAKS
Fire Risk
Explosion Risk
Asphyxiation Risk

- Check all fittings and connections.
- Do not use open flame.
- After the gas line installation is complete, all connections must be tightened and checked for leaks with a commercially available, non-corrosive leak check solution. Be sure to rinse off all leak check solution following testing.

Fittings and connections may have loosened during shipping and handling.

High Altitude Derate

In the USA, input BTU shall be derated 4% (one orifice size) per 1000 feet for altitudes above 2000 feet. In Canada, input BTU shall be derated 10% (two orifice sizes) at altitudes from 2000-4500 feet.

- Gas Supply Pressure: Minimum inlet gas supply pressure must be 3.5 in. W.C. for the purpose of input adjustment. Maximum inlet gas pressure must not exceed 10.0 in. W.C. The gas line supplying the appliance must be sufficient size to furnish the appropriate supply pressure to the appliance while operating in the "High" setting. (Minimum line ID of 1/2 in. required if the line is longer than 20 ft.
- Gas Line Pressure Test: Perform pressure test according to state and local code (if pressure exceeds 1/2 in. psi [3.5 kPa]) before appliance is connected. Be sure to release air pressure from the gas line before connection is made to the appliance.
- Gas Leak Test: Make sure the gas connections are tight. Turn on the gas and coat each joint with a non-corrosive gas leak check solution. Air bubbles will form indicating any leaks. DO NOT USE A FLAME OR ANY TYPE OF IGNITION SOURCE TO CHECK FOR LEAKS. All leaks must be corrected before proceeding with installation.
- The appliance must only be installed in a solid-fuel burning fireplace *with the flue damper clamped open.* The fireplace must be constructed of non-combustible material.
- The minimum permanent free opening (in square inches) that must be provided by the fireplace chimney or damper to vent the flue gases is provided in C.Table 2. If the free opening is smaller than the specified area, do not use this appliance.
- The damper must be removed or fixed in a manner in which will secure it open. Some jurisdictions require the damper to be removed or permanently welded fully open. Check with state and local codes.
- Be sure that the chimney is completely unobstructed to ensure proper ventilation of flue gases including carbon monoxide (CO). CO (a poisonous gas) is tasteless, odorless, colorless and undetectable without proper equipment.

4 Installation Instructions

A. Install the Damper Stop

- Open the damper to the fully open position and secure it open with the stop as shown in Figure 4.1.
- If the damper stop doesn't fit your application, use a permanent means that will keep the damper open at least to the minimum vent opening as outlined in Table 2, Section 1.C.

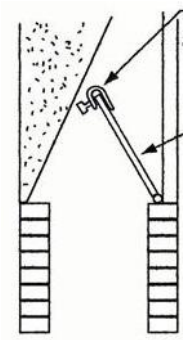

Figure 4.1 Damper Operation

B. Install the Burner/Pan Assembly

The burner/pan assembly is shipped ready for right-hand gas connection. See Section 3.B. for left-hand connection.

- Remove the existing cap or gas jet assembly from the gas stub in your fireplace. Clean the threads using a wire brush or steel wool. Apply Teflon tape or pipe dope to the steel fitting and attach the provided brass adapter to the stub.
- Place the burner/pan assembly in the fireplace. The pan should be centered both front to back and side to side.
- Bend the provided gas connector to facilitate its installation between the burner and the gas stub.
- Attach one end of the gas connector to the brass elbow or safety pilot fitting. Attach the other end to the brass adapter at the gas tube.

C. Install the Grate

- The grate should be centered over the burner pan, side to side. If the grate sits toward the front of the burner pan, the flames will be larger coming through the logs. If the grate sits toward the back of the burner pan, the ember bed will be more prominent. Refer to Figure 4.2.

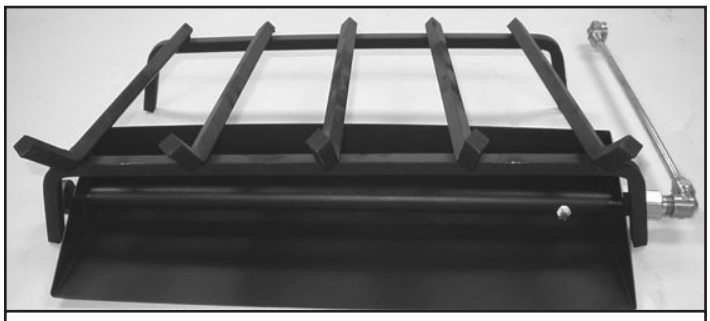

Figure 4.2 Center Grate Over Burner Pan

D. Place Sand and Rockwool

- Pour the sand into the burner pan. Sand should follow the slope of pan, covering it and the burner tube completely.
- Allow the sand to spill out the front of the pan and over the sides onto the fireplace floor.
- Lightly place dime-sized pieces of rockwool evenly on top of the sand or vermiculite.
- The gas burns at the point of the least resistance. In case of an uneven flame pattern it may be necessary to adjust the materials in the pans (using an object such as a screwdriver) to achieve the desired effect.

⚠ WARNING

Explosion Risk

- Follow rockwool placement instructions in this manual.
- Replace rockwool material annually.

Improperly placed rockwool interferes with proper burner operation.

Note: For best results, do not pack down the rock wool. The placement of rock wool can have an effect on flame pattern and may need to be adjusted to achieve a desired appearance.

E. Install the Logs

⚠ WARNING

Fire Risk
Explosion Risk
Personal Injury Risk

Failure to position the parts in accordance with the diagrams provided with the log packages or failure to use only parts approved with this appliance may result in property damage or personal injury.

- Install the logs using the installation instructions included with them.
- Light the burner as outlined in the operating section. Allow the flame pattern to stabilize. If you are satisfied with the flame pattern go to the next step. If you want more or less flame around the front log, turn off the gas and move the grate backward or forward.
- Once you are satisfied, turn on the gas and go on to the next step.
- Arrange the top logs as shown in your log set up instructions. Light the burner as outlined in the operating instructions and allow the flame to stabilize.
- Spread the lava rock around the outside of the burner pan on the floor of the fireplace. If possible, cover the gas connector with the cinders.

Note: If your log set is the burnt-out type, place the rock wool in the center of the logs to give a glowing ember effect.

F. Adjust the Burner Flame

- The burner flame can be adjusted at the manual shutoff valve beside the fireplace to obtain the desired flame appearance.
- The flame color will stabilize after ten minutes of operation.

G. Inspect the Venting System

The fireplace venting system is designed and constructed to develop a positive flow adequate to remove flue gases to the outside atmosphere. See fireplace installation instructions.

A spillage test must be made before the installed appliance is left with the consumer

- Close all doors and windows in the home.
- Light the log set.
- After three minutes, test with a smoke match, smoke candle, stick incense or "hand held portable CO detector" one inch below the top of the opening (lintel) moving across the full width. If spillage (smoke drawn into the room) occurs, it will most likely be near the top, outside corners.

Possible Cures if Spilling Occurs

- The damper should be fully open.
- The fireplace opening needs to be reduced by adding a drop panel across the top under the lintel.
- The air supply from outdoors needs to be increased. Open the outside air kit if the appliance is so equipped, or crack open a door or window.
- If necessary, seek expert advice. Do not operate this appliance.

Cleaning

- Periodic examination and cleaning of the venting system of the fireplace should be done before initial use and at least annually by a qualified agency.

⚠ WARNING

Fire Risk
Explosion Risk

Inspect external vent cap regularly.

- Ensure no debris blocks cap.
- Combustible materials blocking cap may ignite.
- Restricted air flow affects burner operation.

5 Operating Instructions

A. Lighting Instructions

FOR YOUR SAFETY READ BEFORE LIGHTING

WARNING! IF THESE INSTRUCTIONS ARE NOT FOLLOWED EXACTLY, A FIRE OR EXPLOSION MAY RESULT CAUSING PROPERTY DAMAGE, PERSONAL INJURY OR LOSS OF LIFE.

A. This appliance has a manually lighted burner and must be lit by hand. When lighting the burner, follow these instructions exactly.

B. **BEFORE LIGHTING** smell all around the appliance area for gas. Be sure to smell next to the floor because some gas is heavier than air and will settle on the floor.

WHAT TO DO IF YOU SMELL GAS

- Do not try to light any appliance.
- Do not touch any electrical switch; do not use any phone in your building.
- Immediately call your gas supplier from a neighbor's phone. Follow the gas supplier's instructions.
- If you cannot reach your gas supplier, call the fire department.

C. Do not use this appliance if any part has been under water. Immediately call a qualified service technician to inspect the appliance and to replace any part of the control system and any gas control that has been under water.

D. Use only your hand to push in or turn the gas control handle. Never use tools. If the handle will not push in or turn by hand, do not try to repair it. Call a qualified service technician. Force or attempted repair may result in fire or explosion.

LIGHTING INSTRUCTIONS

1. **STOP!** Read the safety information previously listed above.
2. Turn gas control manual valve to the full "OFF" position.
3. Wait 5 minutes to clear out any gas. Then smell for gas, including near the floor. If you smell gas, STOP! Follow "B" in the safety information above on this label. If you don't smell gas, go to the next step.
4. Place a lit match on the surface of the burning embers. Do not hold match in hand.
5. Turn gas control manual valve to the full "ON" position.
6. If appliance will not operate, follow the instructions "TO TURN OFF GAS TO APPLIANCE" and call your service technician or gas supplier.

TO TURN OFF GAS TO APPLIANCE

Turn manual gas control handle to "OFF" position. Do not force.

(Place lit match in ember bed before turning on valve)

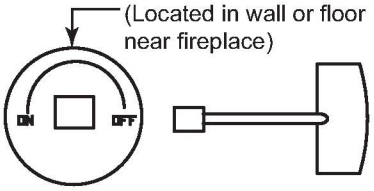

Valve Valve Key

B. Glass Doors

If your fireplace is equipped with glass doors:

- Glass doors should be in fully open poisition when appliance is operating.
- Operating in the closed position will block the radiant heat output and may cause incomplete combustion of the gas and minimize overheating of any valve installation.

⚠ WARNING

Fire Risk

Explosion Risk

Do not close the glass doors during appliance operation.

- Could cause incomplete combustion of the gas.

- Glass doors may be closed when the hearth kit is not being used.

C. Important Safeguards

- Other Fuels
  - Although your gas log set is very realistic in appearance, it is not a real woodburning fire and must not be used for burning any fuel other than natural gas.
  - To avoid irreparable damage to the appliance and/or personal injury, wood, matches, paper, garbage or any other material must not be placed or thrown on top of the logs.
- Appliance Safety
  - To avoid personal injury, do not touch hot surfaces when the appliance is operating.
  - Always ensure that the fireplace screen is closed when the appliance is operating.
  - Close supervision is necessary when the appliance is being used near children.
- Do not remove any of the attached metal plates, which contain important safety and operating information.
- Keep the appliance area clear and free of all combustible materials, gasoline and other flammable vapors and liquids.
- **A qualified service technician must perform installation and repair.** The appliance should be inspected and cleaned annually by a qualified service technician. More frequent cleaning may be required due to excessive lint, dust, pet hair, etc. It is imperative that the control compartments, burners and air passageways are unobstructed during operation.
  - Review proper placement of logs, rockwool, lava rock, sand or vermiculite.
  - Ensure there are no gas leaks.
  - Ensure the flow of combustion and ventilation air is not obstructed (front grilles and vent caps).
- Before installing into a solid fuel burning fireplace, the chimney and firebox should be inspected and cleaned to remove soot, creosote, ashes, paint, bird nests etc.
- Annual examination of the chimney must be performed by a qualified agency to ensure proper ventilation of flue gases created by this appliance.
- Have the chimney and adjacent structure inspected and cleaned by qualified professionals. Hearth & Home Technologies recommends that NFI certified professionals, or technicians under the direction of certified professionals, conduct a minimum of an **NFPA 211 Level 2** inspection of the chimney.
- Replace component parts of the chimney and fireplace as specified by the professionals.
- Ensure all joints are properly engaged and the chimmney is properly secured.
- Do not allow fans to blow directly into the fireplace. Avoid any drafts that alter burner flame pattern.
- Do not use a blower insert, heat exchanger insert or other accessories not approved for use with this appliance.

  Solid fuels shall not be burned in a fireplace where a decorative appliance is installed.
- If glass doors are present, the **glass doors must be fully opened** while appliance is in operation.

⚠ WARNING

Do NOT use this appliance if any part has been under water. Immediately call a qualified service technician to inspect the appliance and to replace any part of the control system and any gas control which has been under water.

⚠ WARNING

Fire Risk

High Temperatures

Keep combustible household items away from appliance.

Do NOT obstruct combustion and ventilation air.

- Do NOT place combustible items on top of or in front of appliance.
- Keep furniture, draperies away from appliance.

6 Maintaining and Servicing the Appliance

A. Servicing Your Appliance

⚠ WARNING

Risk of injury or property damage

Before servicing:

- Turn off gas.
- Turn off electricity to appliance.
- Disable remote control, if one is present.
- Ensure appliance is completely cooled.

After Servicing:

- Replace any screen or barrier that was removed.
- Reseal and reinstall any venting removed for servicing.

- Repair and replacement work should be done by a qualified service technician.
- Always shut off the gas supply and make sure the appliance is cool before beginning any service operation.
- Always check for gas leaks after servicing.
- Always check for proper venting.

⚠ CAUTION

- Logs can get very hot. Handle only when they are cool.

B. Cleaning Your Appliance

Your gas logs require little care. Keep the burner assembly, logs and burner area surrounding the logs clean by vacuuming or brushing with a dry paint brush at least twice a year.

- The logs become fragile after burning. Take care in handling.
- Always turn off the gas before cleaning. For relighting, refer to lighting instructions located in Section 5.A. of these instructions.
- Always keep the appliance clear and free from combustible materials, gasoline, and other flammable vapors and liquids.
- Never obstruct the flow of combustion and ventilation air. Keep the front of the appliance clear of all obstacles and materials.
- Leave clearance of at least 36 in. from the front of the fireplace.
- The air shutter should not be blocked.

C. Annual Inspection

⚠ WARNING

Annual inspection by qualified technician recommended.

Check:

- Condition of doors, surrounds and fronts.
- Obstructions of combustion and ventilation air.
- Condition of logs.
- Condition of firebox.
- Gas connections and fittings.
- Obstructions of termination cap.

Clean:

- Glass.
- Logs.
- Burner, burner ports.

Risk of:

- Fire
- Delayed ignition or explosion
- Exposure to combustion fumes
- Odors

D. Troubleshooting

With proper installation and maintenance, your new decorative gas appliance should provide years of trouble-free service. If you do experience a problem, refer to the troubleshooting guide below. This guide will assist you or a qualified service technician in the diagnosis of problems and the corrective action to be taken.

Symptons	Possible Causes	Corrective Action
1. A match will not light the main burner; no gas to the main burner	Main gas shutoff valve is closed.	Make sure the shutoff valve located on the incoming gas line is open
	There is air in the gas line.	Bleed air from the gas line; wait five minutes and attempt to relight the main burner.
	No gas supply to the appli-ance.	Check the plumbing to ensure the appliance has been hooked up to the gas supply line.
	A blockage is preventing gas flow.	Inspect the burner orifice for ob-struction. Call a qualified service technician.

MHK18NG

Beginning Manufacturing Date: Jun 2006
Ending Manufacturing Date: Active

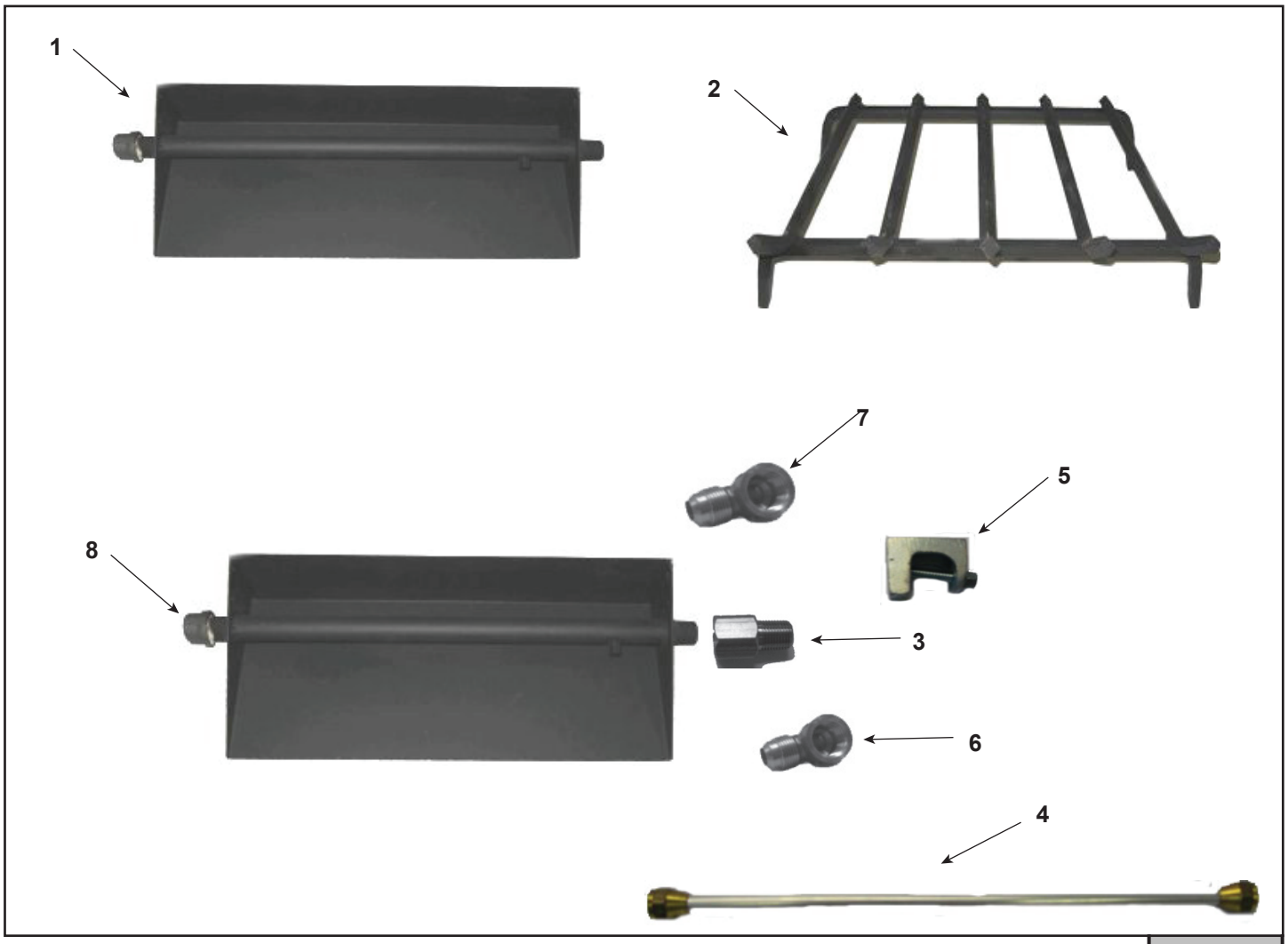

IMPORTANT: THIS IS DATED INFORMATION. When requesting service or replacement parts for your appliance please provide model number and serial number. All parts listed in this manual may be ordered from an authorized dealer.

ITEM	DESCRIPTION	COMMENTS	PART NUMBER	Stocked at Depot
1	Burner Pan Assembly		SRVAGLBP14	
2	Grate Assembly		SRVAG16	
3	Orifice		BPO-2-26	
4	Connector Tube		SRV3814NXN	
5	Damper Stop Assembly		SRV500-SC	
6	Elbow, 3/8” MFL x 3/8” FPT Brass		01-1050	
7	Elbow, 3/8” Flare x 1/2” FIP Brass		10-1037	
8	Cap, 1/2” Malleable Pipe		10-1053	
	Sand		SRVACC15	
	Lava Rock		SRVACC10	
	Glowing Embers		SRVACC12	
	Installation Instructions		4004-304	

2/21

MHK24NG

Beginning Manufacturing Date: Jun 2006
Ending Manufacturing Date: Active

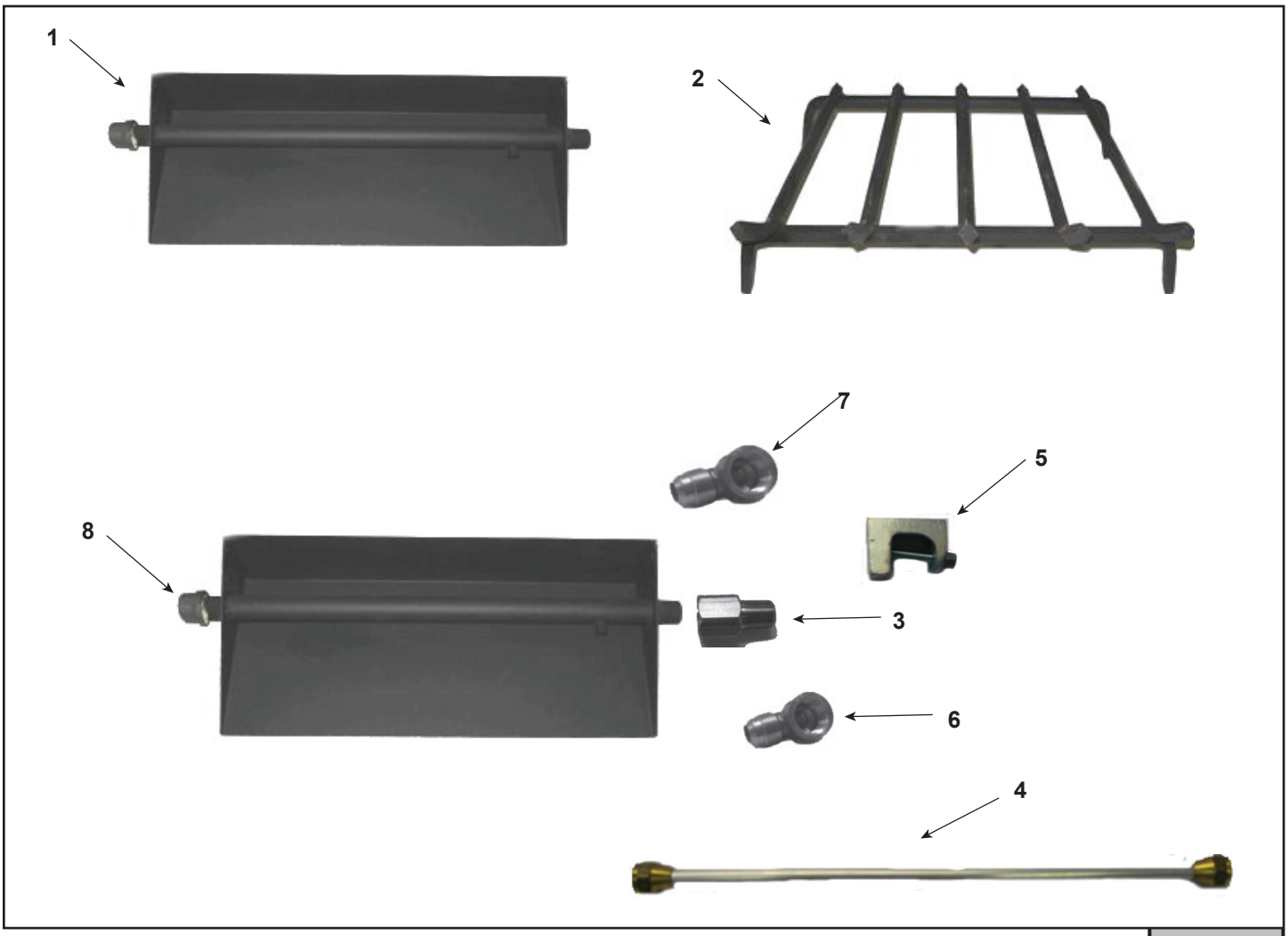

IMPORTANT: THIS IS DATED INFORMATION. When requesting service or replacement parts for your appliance please provide model number and serial number. All parts listed in this manual may be ordered from an authorized dealer.

ITEM	DESCRIPTION	COMMENTS	PART NUMBER	Stocked at Depot
1	Burner Pan Assembly		SRVAGLBP18	
2	Grate Assembly		SRVAG18	
3	Orifice		BPO-2-20	
4	Connector Tube		SRV3814NXN	
5	Damper Stop Assembly		SRV500-SC	
6	Elbow, 3/8" MFL x 3/8" FPT Brass		01-1050	
7	Elbow, 3/8" Flare x 1/2" FIP Brass		10-1037	
8	Cap, 1/2" Malleable Pipe		10-1053	
	Sand		SRVACC15	
	Lava Rock		SRVACC10	
	Glowing Embers		SRVACC12	
	Installation Instructions		4004-304	

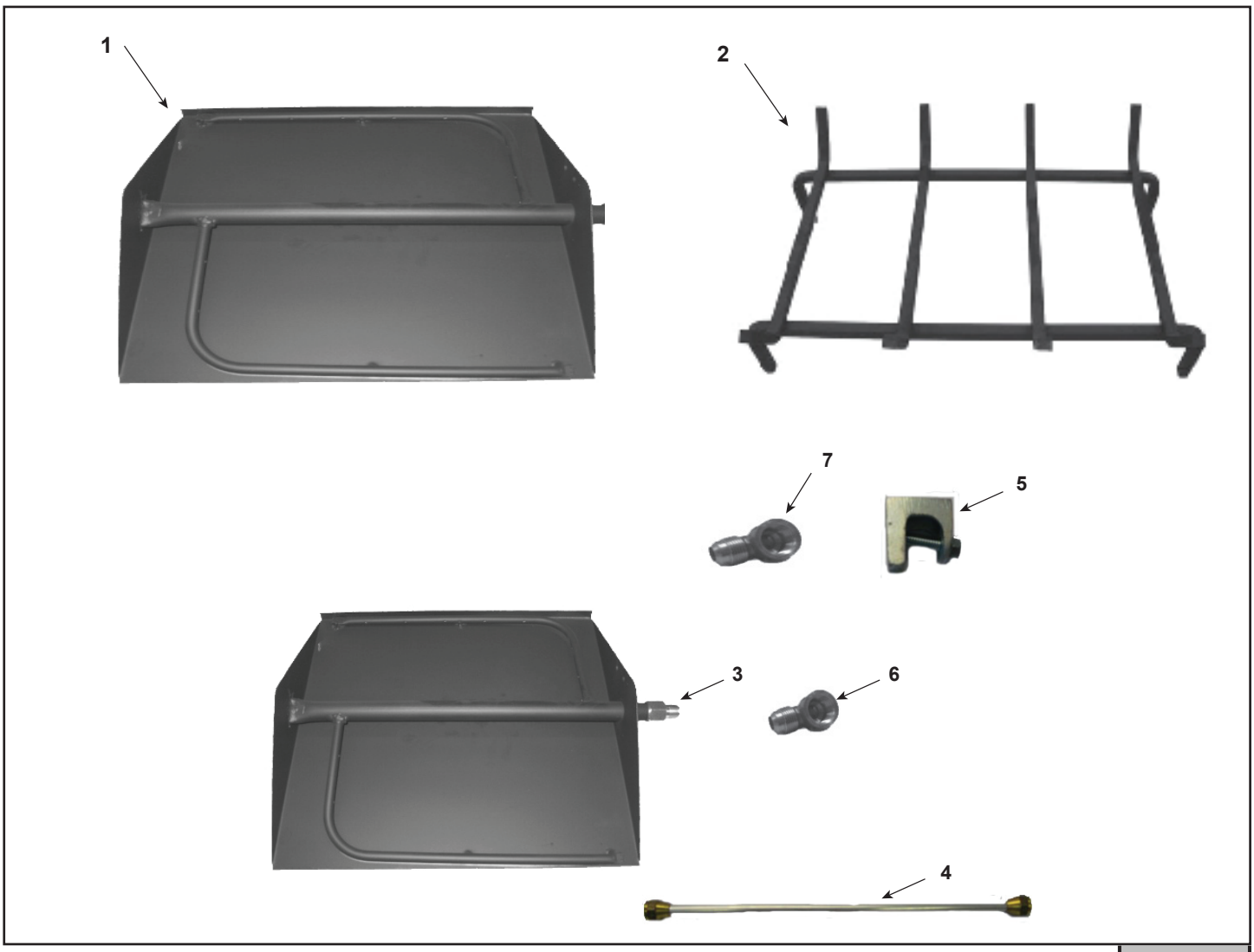

IMPORTANT: THIS IS DATED INFORMATION. When requesting service or replacement parts for your appliance please provide model number and serial number. All parts listed in this manual may be ordered from an authorized dealer.

ITEM	DESCRIPTION	COMMENTS	PART NUMBER	Stocked at Depot
1	Burner Pan Assembly		SRVOBP-18ST	
2	Grate Assembly		SRVAG16	
3	Orifice		BPO-2-26	
4	Connector Tube		SRV3814NXN	
5	Damper Stop Assembly		SRV500-SC	
6	Elbow, 3/8” MFL x 3/8” FPT Brass		01-1050	
7	Elbow, 3/8” Flare x 1/2” FIP Brass		10-1037	
	Sand	Qty. 2 Req.	SRVACC15	
	Lava Rock	Qty. 2 Req.	SRVACC10	
	Glowing Embers	Qty. 2 Req.	SRVACC12	
	Installation Instructions		4004-304	

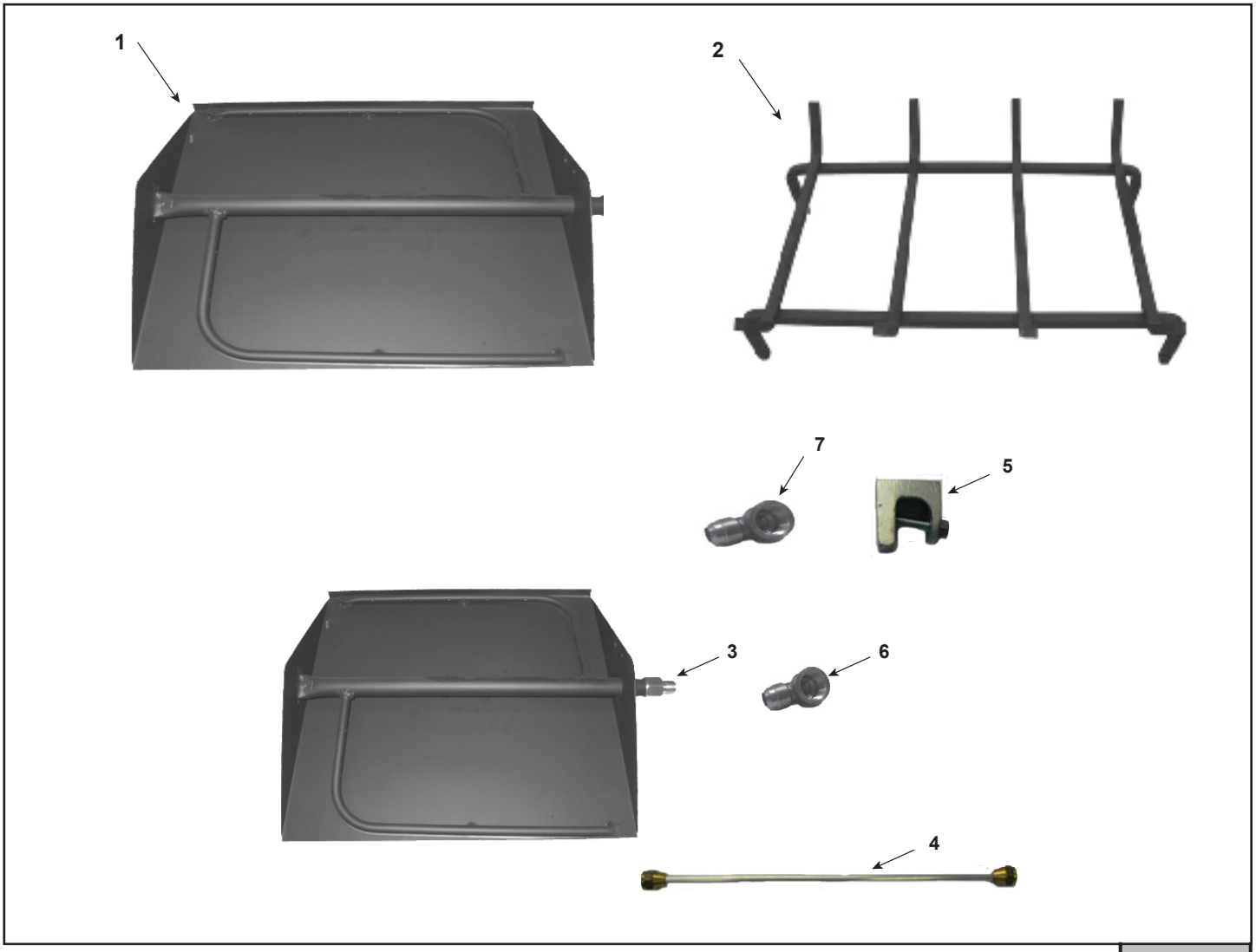

IMPORTANT: THIS IS DATED INFORMATION. When requesting service or replacement parts for your appliance please provide model number and serial number. All parts listed in this manual may be ordered from an authorized dealer.

ITEM	DESCRIPTION	COMMENTS	PART NUMBER	Stocked at Depot
1	Burner Pan Assembly		SRVOBP-18ST	
2	Grate Assembly		SRVAG16	
3	Orifice		BPO-2-26	
4	Connector Tube		SRV3814NXN	
5	Damper Stop Assembly		SRV500-SC	
6	Elbow, 3/8" MFL x 3/8" FPT Brass		01-1050	
7	Elbow, 3/8" Flare x 1/2" FIP Brass		10-1037	
	Sand	Qty. 2 Req.	SRVACC15	
	Lava Rock	Qty. 2 Req.	SRVACC10	
	Glowing Embers	Qty. 2 Req.	SRVACC12	
	Installation Instructions		4004-304	

Hearth & Home Technologies LLC
LIMITED LIFETIME WARRANTY

Hearth & Home Technologies LLC ("HHT") extends the following warranty for HHT gas, wood, pellet and electric hearth appliances (each a "Product" and collectively, the "Product(s)") and certain component parts set forth in the table below ("Component Part(s)") that are purchased from a HHT authorized dealer or distributor.

WARRANTY COVERAGE:

HHT warrants that the Products and their Component Parts will be free from defects in materials and workmanship for the applicable period of Warranty coverage set forth in the table below ("Warranty Period"). If a Product or Component Parts are found to be defective in materials or workmanship during the applicable Warranty Period, HHT will, at its option, repair the applicable Component Part(s), replace the applicable Component Part(s), or refund the purchase price of the applicable Product(s). The maximum amount recoverable under this Warranty is limited to the purchase price of the Product. This Warranty is transferable from the original purchaser to subsequent owners, but the Warranty Period will not be extended in duration or expanded in coverage for any such transfer. This Warranty is subject to conditions, exclusions, and limitations as described below.

WARRANTY PERIOD:

Warranty coverage begins at the date of installation. In the case of new home constructions, Warranty coverage begins on the date of first occupancy of the dwelling or six months after the sale of the Product(s) by an independent, authorized HHT dealer or distributor, whichever occurs earlier. However, the Warranty coverage shall commence no later than 24 months following the date of Product shipment from HHT, regardless of the installation or occupancy date.

The term "Lifetime" in the table below is defined as: 20 years from the beginning date of warranty coverage for gas appliances, and 10 years from the beginning date of warranty coverage for wood and pellet appliances. These time periods reflect the minimum expected useful lives of the designated Component Parts under normal operating conditions.

Warranty Period		HHT Manufactured Appliances and Venting					
Component Parts	Labor	Gas	Pellet	Wood	Electric	Venting	Component Parts Covered by this Warranty
1 Year		X	X	X		X	All parts including handles, external enameled components and other material except as covered by Warranty Conditions, Warranty Exclusions, and Warranty Limitations listed
2 Years					X		All parts except as covered by Warranty Conditions, Warranty Exclusions, and Warranty Limitations listed
2 years			X	X			Igniters, Auger Motors, Electronic Components, and Glass
		X					Electrical components limited to modules, remotes/wall switches, valves, pilots, blowers, junction boxes, wire harnesses, transformers and lights (excluding light bulbs)
		X		X			Molded Refractory Panels, Glass Liners
3 years			X				Firepots, burnpots, mechanical feeders/auger assemblies
5 years	1 year	X					Vent Free Burners, Vent Free Logs
			X	X			Castings, Medallions and Baffles
6 years	3 years			X			Catalysts
7 years	3 years		X	X			Manifold tubes, HHT Chimney and Terminations
10 years	1 year	X					Burners, logs and refractory
Limited Lifetime	3 years	X	X	X			Firebox and heat exchanger, FlexBurn® System (engine, inner cover, access cover and fireback)
1 Year	None	X	X	X	X	X	All purchased replacement parts

WARRANTY CONDITIONS:

- Because HHT cannot control the quality of any Products sold by unauthorized sellers, this Warranty only covers Products that are purchased through an HHT authorized dealer or distributor unless otherwise prohibited by law; a list of HHT authorized dealers is available on the HHT branded websites.
- This Warranty is only valid while the applicable Product remains at the site of original installation.
- This Warranty is only valid in the country in which the HHT authorized dealer or distributor that sold the applicable Product is authorized to sell applicable Product.
- Contact your installing distributor or dealer for Warranty service. If the installing dealer or distributor is unable to provide necessary parts, contact the nearest HHT authorized dealer or supplier. Additional service fees may apply if you are seeking Warranty service from a dealer other than the dealer from whom you originally purchased the applicable Product.
- No HHT consumer should bear cost of warranty service or costs incurred while servicing warranty claims (i.e., travel, gas, or mileage) when the service is performed within the terms of this Warranty. Check with your dealer or distributor in advance for any costs to you when arranging a warranty call. Travel and shipping charges for parts are not covered by this Warranty.

WARRANTY EXCLUSIONS:

This Warranty does not cover the following:

- Changes in surface finishes as a result of normal use. As a heating appliance, some changes in color of interior and exterior surface finishes may occur. This is not a flaw and is not covered under the Warranty.
- Damage to printed, plated, or enameled surfaces caused by fingerprints, accidents, misuse, scratches, melted items or other external sources and residues left on the plated surfaces from the use of abrasive cleaners or polishes.
- Repair or replacement of parts that are subject to normal wear and tear during the Warranty Period are not covered. These parts include: paint, wood and pellet gaskets, firebricks, grates, flame guides, batteries and the discoloration of glass.
- Minor expansion, contraction, or movement of certain parts causing noise. These conditions are normal and complaints related to this noise are not covered by this Warranty.
- Damages resulting from: (1) failure to install, operate, or maintain the applicable Product in accordance with the installation instructions, operating instructions, and listing agent identification label furnished with the applicable Product; (2) failure to install the applicable Product in accordance with local building codes; (3) shipping or improper handling; (4) improper operation, abuse, misuse, continued operation with damaged, corroded or failed components, accident, or improperly/incorrectly performed repairs; (5) environmental conditions, inadequate ventilation, negative pressure, or drafting caused by tightly sealed constructions, insufficient make-up air supply, or handling devices such as exhaust fans or forced air furnaces or other such causes; (6) use of fuels other than those specified in the operation instructions; (7) installation or use of components not supplied with the applicable Product or any other components not expressly authorized and approved by HHT; (8) modification of the appliance not expressly authorized and approved by HHT in writing; and/or (9) interruptions or fluctuations of electrical power supply to the applicable Product.
- Non-HHT venting components, hearth connections or other accessories used in conjunction with the applicable Product.
- Any part of a pre-existing fireplace system in which an insert or a decorative gas applicable Product is installed.
- HHT's obligation under this Warranty does not extend to the Product's capability to heat the desired space. Information is provided to assist the consumer and the dealer in selecting the proper Product for the application. Consideration must be given to the Product location and configuration, environmental conditions, insulation and air tightness of the structure.

This warranty is void if:

- The applicable Product has been over-fired, operated in atmospheres contaminated by chlorine, fluorine, or other damaging chemicals. Over-firing can be identified by, but not limited to, warped plates or tubes, deformation/warping of interior cast iron structure or components, rust colored cast iron, bubbling, cracking and discoloration of steel or enamel finishes.
- The applicable Product is subjected to prolonged periods of dampness or condensation.
- There is any damage to the applicable Product due to water or weather damage which is the result of, but not limited to, improper chimney or venting installation.

LIMITATIONS OF REMEDIES AND LIABILITY:

- **EXCEPT TO THE EXTENT PROVIDED BY LAW, HHT MAKES NO EXPRESS WARRANTIES OTHER THAN THE WARRANTY SPECIFIED HEREIN. The owner's exclusive remedy and HHT's sole obligation under this Warranty or in contract, tort or otherwise, shall be limited to replacement of the Component Part(s), repair of the Component Part(s), or refund of the original purchase price of the applicable Product(s), as specified above; provided, however, that (i) if HHT is unable to provide replacement of the Component Part(s) and repair of the Component Part(s) is not commercially practicable or cannot be timely made, or (ii) the customer is willing to accept a refund of the purchase price of the applicable Product(s), HHT may discharge all such obligations by refunding the purchase price of the applicable Product. In no event will HHT be liable for any incidental or consequential damages caused by defects in the applicable Product. Some States do not allow the exclusion or limitation of incidental or consequential damages, so the above limitation or exclusion may not apply to you. This Warranty gives you specific legal rights and you may also have other rights which vary from State to State. THE DURATION OF ANY IMPLIED WARRANTY IS LIMITED TO DURATION OF THE EXPRESSED WARRANTY SPECIFIED ABOVE FOR THE APPLICABLE PRODUCT. Some States do not allow limitations on how long an implied warranty lasts, so the above limitation may not apply to you.**

C. Contact Information

HEARTH & HOME technologies™

Please contact your Hearth & Home Technologies dealer with any questions or concerns.

For the number of your nearest Hearth & Home Technologies dealer, please call 1-800-927-6841 or 1-888-427-3973.

- NOTES -

CAUTION

DO NOT DISCARD THIS MANUAL
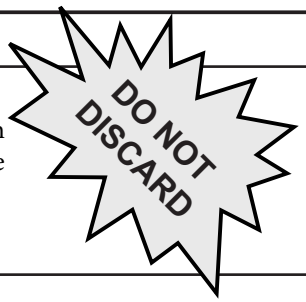
- Important operating and maintenance instructions included.
- Read, understand and follow these instructions for safe installation and operation.
- Leave this manual with party responsible for use and operation.