This Owner's Manual is provided and hosted by Appliance Factory Parts.

Appliance Factory Parts
Experts in BBQ, Humidifier, & Appliance Parts
1-800-955-7075

MAJESTIC VDY24/18D5 Owner's Manual

Shop genuine replacement parts for MAJESTIC VDY24/18D5

Find Your MAJESTIC Fireplace Parts - Select From 585 Models

-------- Manual continues below --------

HEARTH & HOME technologies™

Vented Gas Log Set Models: VDY24/18, VDY30

"Duzy" Series

Installation and Operating Instructions

WARNINGS

If the information in this manual is not followed exactly, a fire or explosion may result causing property damage, personal injury or loss of life.

- **Do not store or use gasoline or other flammable vapors and liquids in the vicinity of this or any other appliance.**
- **WHAT TO DO IF YOU SMELL GAS**
  - **Do not try to light any appliance.**
  - **Do not touch any electrical switch; do not use any phone in your building.**
  - **Immediately call your gas supplier from a neighbor's phone. Follow the gas supplier's instructions.**
  - **If you cannot reach your gas supplier, call the fire department.**
- **Installation and service must be performed by a qualified installer, service agency or the gas supplier.**

This gas log set is to be installed only in a solid-fuel burning fireplace with a working flue constructed of noncombustible material.

INSTALLER: Leave this manual with the appliance.

CONSUMER: Retain this manual for future reference.

Approved to ANSI Z21.60 / CSA 2.26

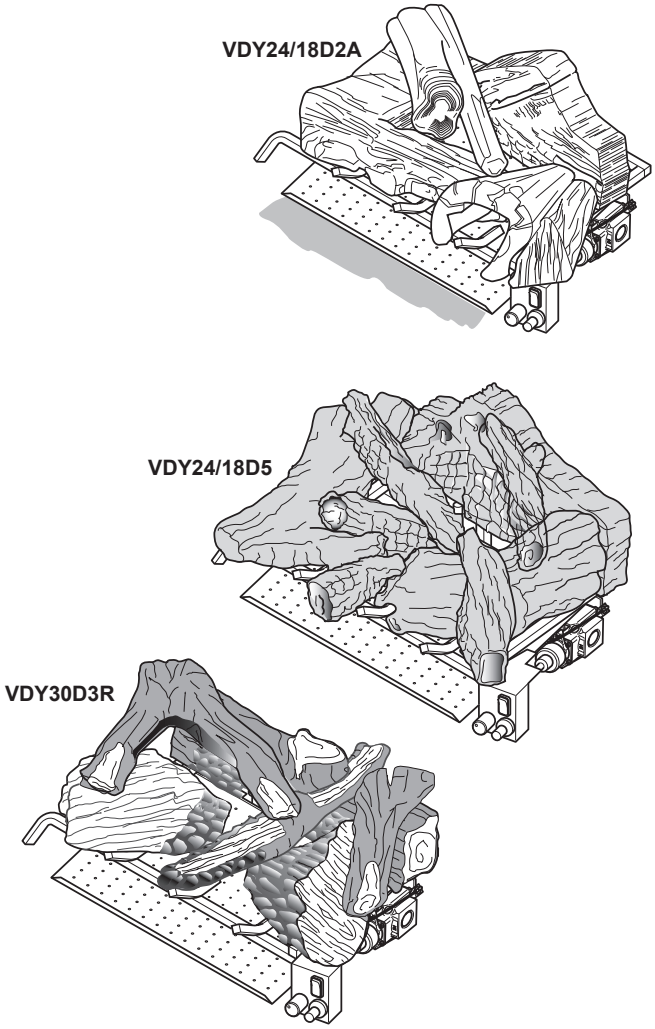

321999
VDY log cover

Thank you and congratulations on your purchase of a Hearth & Home Technologies Log Set.

PLEASE READ THE INSTALLATION AND OPERATION INSTRUCTIONS BEFORE USING THE APPLIANCE!

IMPORTANT: Read all instructions and warnings carefully before starting installation.

Failure to follow these instructions may result in a possible fire hazard and will void the warranty.

Important Safety Information **3**
Getting Started **4**
Check for Correct Parts 4
Items Required for Installation 4
Product Specifications **4**
Gas Pressures 4
Gas Specifications 4
Ignition Controls 4
Minimum Hearth Dimensions 5
Damper Stop Installation 5
Placement in a Fireplace with a Restrictive Barrier **6**
Installation **7**
Place and Secure Appliance 7
Assembly Procedure 7
Gas Line Connection 7
Electrical Wiring - Millivolt **9**
Check System Operation 9
Log Placement **10**
VDY24/18D2 10
VDY30D2A 11
VDY24/18D3R 12
VDY30D3R 13
VDY24/18D5 14
VDY30D5 16
Glowing Ember Placement 18
Decorative Volcanic Rock Placement 18
Fireplace Draft Test **18**
Flame Appearance **19**
Operating Instructions **20**
For Your Safety Read Before Lighting 20
Millivolt Control Lighting Instructions 21
To Turn Off Gas to Heater 21
Match Lighting Instructions 21
Optional Remote Receiver (Millivolt) **22**
Cleaning and Servicing **23**
Troubleshooting **24**
► **Service Parts** **26**
Accessories **34**
Massachusetts Requirements **35**
Warranty **36**

➔ = Contains updated information.

INSTALLER

Please leave these instructions with the appliance.

IMPORTANT

Read these instructions carefully before installing or trying to operate this vent-free gas heater.

1. The installation, combustion and ventilation air must conform with local codes or, in the absence of local codes, with the National Fuel Gas Code, ANSI Z223.1.
2. This unit complies with *ANSI Z21.60 • CSA 2.26* Decorative Gas Appliance for Installation in Solid-Fuel Burning Fireplace.
3. Installation and repair should be done by a qualified service person. Hearth & Home Technologies Vented Gas Logs must be installed only in a solid-fuel (wood) burning fireplace which can only be constructed of non-combustible material, with minimum venting requirements, see installation section.
4. To prevent malfunction, gas log set and flue should be cleaned at least annually by a professional service person. More frequent cleaning may be required due to excessive lint from carpeting, etc. It is imperative that control compartments, burners and circulating air passageways be kept clean.
5. Correct installation of the ceramic fiber logs, and annual cleaning are necessary to minimize problems with sooting. See log placement instructions for proper installation.
6. A damper clamp must be installed to provide the minimum permanent vent opening to vent flue products, See installation instructions.
7. Never burn solid fuels in a fireplace where a gas log set is installed.
8. ***This appliance must not be used with glass doors in the closed position.*** Provisions for adequate combustion air must be provided, adequate combustion air usually results in all flames curling into the fireplace away from screen and up the flue.
9. Keep room area clear and free from combustible materials, gasoline and other flammable vapors and liquids.
10. Children and adults should be alerted to the hazard of high surface temperature and should stay away to avoid burns or clothing ignition.
11. Young children should be carefully supervised when they are in the same room with the gas log set in operation.
12. Do not place clothing or other flammable material near the fireplace when the gas logs are in use.

OWNER

Please retain these instructions for future reference.

WARNING

- **Any change to this gas log set or its controls can be dangerous.**
- **Improper installation or use of the gas log set can cause serious injury or death from fire, burns, explosion or carbon monoxide poisoning.**

13. Do not use this gas log set if any part has been underwater. Immediately call a qualified service technician to inspect the gas logs and replace any part of the control system and any gas control which has been under water.
14. The gas log set and its individual shutoff valve must be disconnected from the gas supply piping system during any pressure testing of the gas supply piping system at test pressures in excess of 1/2 psig (3.5kPa).
15. The gas log set must be isolated from the gas supply piping system by closing its individual manual shutoff valve during any pressure testing of the gas supply piping system at test pressures equal to or less than 1/2 psig (3.5kPa).
16. ***FOR MASSACHUSETTS RESIDENTS ONLY:***
    Installation of this vented gas log in the Commonwealth of Massachusetts requires the damper be permanently removed or welded in the full open position. In addition, a naturally vented gas log may not be installed in a bedroom or bathroom in the commonwealth of Massachusetts.

WARNING

This appliance is for installation only in a solid fuel burning fireplace (masonry fireplace or manufactured fireplace)

Installation and service of this appliance should be performed by qualified personnel. Hearth & Home Technologies recommends HHT Factory Trained or NFI certified professionals.

hearthED FACTORY TRAINING Fuel Your Fire

NFI NATIONAL FIREPLACE INSTITUTE® A CERTIFICATION AGENCY

MAKE SURE YOU HAVE RECEIVED ALL PARTS:

Check your packing list to verify that all listed parts have been received. You should have the following:

BURNER - GRATE ASSEMBLY 24/18, 30

- Burner and Grate Weldment Assembly
- Lava Rocks (2)
- Glowing Embers (Rock Wool)
- Damper Clamp
- Installation /Operating Instructions
- Masonry Screws (2)
- 3/8" Aluminum tube with 3/8" 90° elbow, 1/2" to 3/8" tube fitting

CERAMIC FIBER OR REFRACTORY CEMENT LOGS 24/18, 30

- Individual Logs
- Installation Instructions

Carefully inspect the contents for shipping damage. If any parts are missing or damaged, immediately inform the dealer from whom you purchased the appliance. **Do not attempt to install any part of the appliance unless you have all parts in good condition.**

ITEMS REQUIRED FOR INSTALLATION

Ensure that the following items are available before proceeding with installation:

- External regulator (for propane/L.P.G. only)
- Manual shutoff valve
- Piping which complies with local codes
- Pipe wrench
- Tee joint
- Pipe sealant approved for use with propane/L.P.G. (Resistant to sulfur compounds)
- Drill with masonry bit (for mounting to the floor)

CAUTION

- **Handle the gas log burner assembly by the grate only. Do not pick the unit up by the burner.**
- **Gloves are recommended when handling ceramic fiber logs to prevent skin irritation from loose fibers. Logs are fragile — handle with care.**

GAS PRESSURES

	Natural	*Propane (LP)
Inlet Minimum	6.0” w.c.	11.0” w.c.
Inlet Maximum	10.5” w.c.	13.0” w.c.
Regulator Pressure	4.0” w.c.	10.0” w.c.

***NOTE:** An external regulator is required to reduce supply pressure to a maximum of 13” w.c.

GAS SPECIFICATIONS

Model	Fuel	Control	Gas Rate Min. Input BTU/h
VDY24/18NVP	Nat.	Millivolt (thermopile)	50,000
VDY24/18PVP	LP	Millivolt (thermopile)	50,000
VDY30NVP	Nat.	Millivolt (thermopile)	65,000
VDY30PVP	LP	Millivolt (thermopile)	65,000

IGNITION CONTROLS

Piezo ignitor allows ignition of the pilot without the use of matches or batteries.

Millivolt control with pilot has three (3) positions:

OFF - All gas to the gas logs is shut off at the valve.
IGN - Valve position to light/maintain a standing pilot.
ON - Valve position to light/maintain the gas burner.

WARNING: This product and the fuels used to operate this product (liquid propane or natural gas), and the products of combustion of such fuels, can expose you to chemicals including benzene, which is known to the State of California to cause cancer and reproductive harm. For more information go to: www.P65Warnings.ca.gov.

MINIMUM HEARTH DIMENSIONS

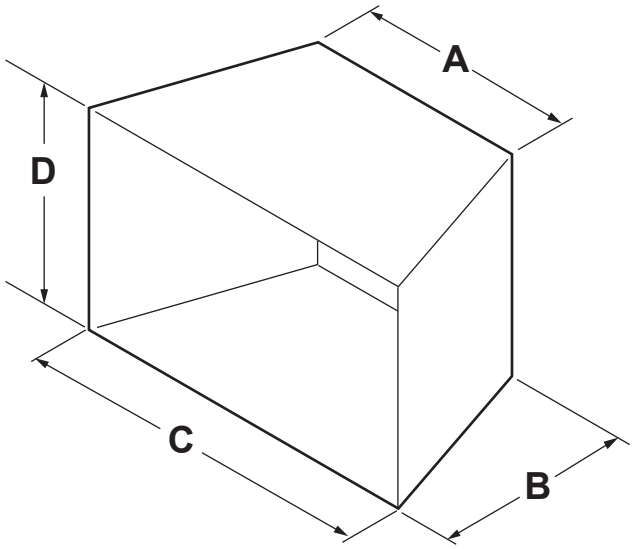

MILLIVOLT SERIES				
Model	**A**	**B**	**C**	**D**
VDY24/18	18" (457 mm)	13½" (343 mm)	26" (660 mm)	16" (406 mm)
VDY30	24" (610 mm)	13½" (343 mm)	32" (813 mm)	16" (406 mm)

Figure 1 - Minimum Hearth Dimensions

BEFORE INSTALLING THE APPLIANCE:

- Turn off gas supply to Masonry fireplace or manufactured wood burning firebox.
- Have the fireplace floor and chimney professionally cleaned to remove ashes, soot, creosote or other obstructions. Have this cleaning performed annually after installation.
- Seal any fresh air vents or ash clean-out doors located on floor or wall of fireplace. If not, drafting may cause pilot outage or sooting. Use a heat-resistant sealant.

INSTALL AND OPERATE THE APPLIANCE AS DIRECTED IN THIS MANUAL

DAMPER STOP INSTALLATION

A damper stop is provided with the unit. The damper stop must be installed as shown in *Figure 2* to prevent full closure of the fireplace damper blade and provide a minimum flue opening, per table below.

Should the clamp not fit, or provide the required permanent opening from the table have the damper blade cut to provide minimum permanent opening or a permanent stop installed.

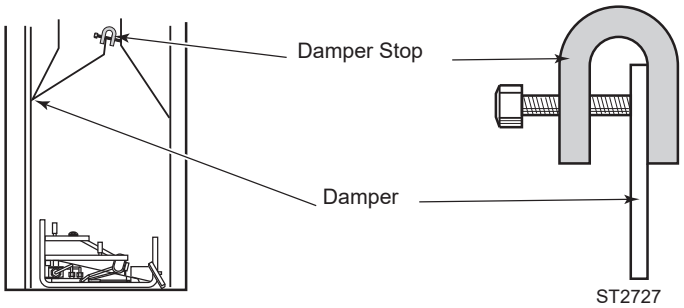

Figure 2 - Damper Stop Installation

FOR MASSACHUSETTS RESIDENTS ONLY

Installation of this vented gas log set in the Commonwealth of Massachusetts requires the damper be permanently removed or welded in the fully open position. In addition, a naturally vented gas log may not be installed in a bedroom or bathroom in the Commonwealth of Massachusetts.

Minimum Opening Area of Chimney Damper for Venting

Chimney Height	VDY24/18	VDY30
6'	51 sq in	64 sq in
8'	51 sq in	64 sq in
10'	51 sq in	64 sq in
15'	39 sq in	51 sq in
20'	39 sq in	51 sq in
30'	30 sq in	51 sq in

WARNING

The fireplace and gas logs function as a system. If the fireplace is spilling into the room (check with a match or smoke stick). Reposition the damper clamp until a positive draft is obtained, by opening the damper. If negative pressure in the home prevents having a positive draft contact your dealer.

IMPORTANT INFORMATION FOR THE INSTALLATION OF THIS GAS LOG SET

The following are guidelines for placing a gas log set in a fireplace that has a restrictive barrier along the bottom front opening of the fireplace. Some examples of barriers are glass/screen door frames and sunken/recessed fireplaces.

Height of Restriction (x)	Minimum Depth of Fireplace/Firebox
No Restriction	13½”
0 to 3”	15”
Greater than 3”	*

*Any barrier greater than 3” placed in front of the gas log set is not recommended by the manufacturer.

NOTE: Non combustible material such as refractory brick may be used to line the floor of the fireplace in order to raise the height of the gas log set in relation to a restrictive barrier. If the unit is raised, the minimum height dimension listed in the homeowner’s manual must not be exceeded.

NOTE: If the log set is equipped with a remote receiver, a restrictive barrier may reduce the battery life by increasing the ambient temperature inside the fireplace. Placement of the receiver outside of the fireplace will extend the battery life.

WARNING

Barriers such as the bottom of a glass door frame placed in front of a gas log set can change the air flow characteristics of the fireplace which in turn can cause the unit to overheat and malfunction. Any deviation from the installation guidelines on this sheet will potentially void the warranty.

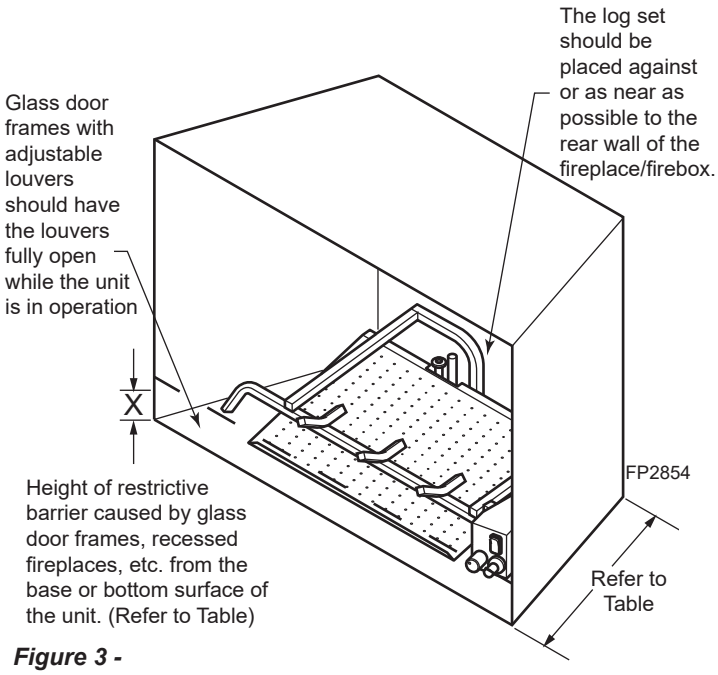

Figure 3 - Reference Drawing of Log Set in an Enclosure

PLACE AND SECURE APPLIANCE

WARNING

You must secure the gas log heater to the fireplace floor. Properly securing the grate prevents movement of the entire unit when you adjust the controls. Grate movement could cause a gas leak.

ASSEMBLY PROCEDURE

1. Center the gas log unit in the fireplace or firebox. Make certain the front feet of the grate sit inside the front edge of the fireplace or firebox.
2. Refer to *Figure 4* for hole locations. After centering the grate correctly, mark the hole positions on the fireplace/firebox floor. Drill two (2) 5/32" diameter holes approximately 1½" deep.
3. Anchor the grate to the fireplace/firebox floor using the screws provided. *Figure 4*

Proper installation of the grate is essential to prevent any movement of the gas logs and controls during operation.

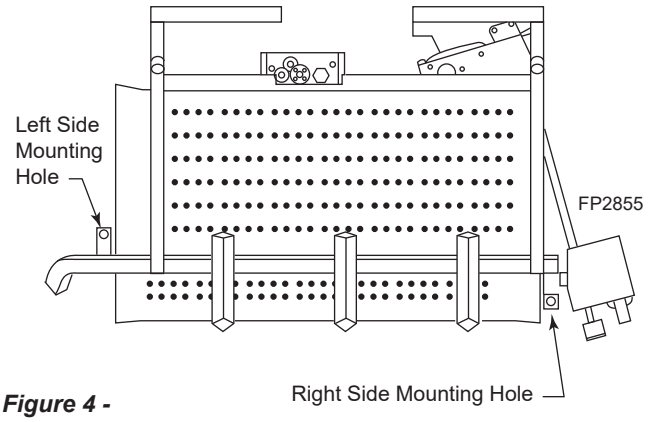

Figure 4 - Securing Heater to Floor of Fireplace/Firebox

GAS LINE CONNECTION

NOTICE: A qualified gas appliance installer must connect the heater to the gas supply. Consult all local codes.

CAUTION

Use new black iron or steel pipe. Internally tinned copper or copper tubing can be used per National Fuel Code, section 2.6.3, providing gas meets hydrogen sulfide limits, and where permitted by local codes. Gas piping system must be sized to provide minimum inlet pressure (Listed on Data Plate) at the maximum flow rate (BTU/Hr). Undue pressure loss will occur if the pipe is too small.

A manual shutoff valve must be installed upstream of the appliance. Union tee and plugged 1/8" NPT pressure tapping point should be installed upstream of the appliance. *Figure 5*

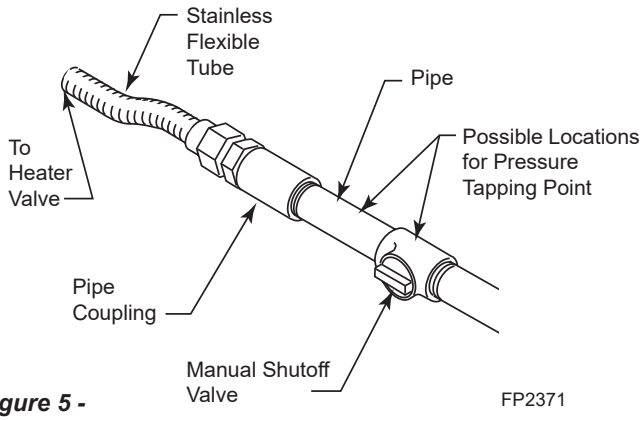

Figure 5 - Gas Connection

IMPORTANT: Hold appliance regulator firmly with a wrench to prevent movement when connecting to inlet piping.

Check gas type: The gas supply must be the same as stated on the gas logs rating plate. If the gas supply is different, **DO NOT INSTALL THE GAS LOGS.** Contact your dealer for the correct model.

Always use an external regulator for all propane/LPG gas logs only, to reduce the supply tank pressure to a maximum of 13" w.c. This is in addition to the regulator fitted to the gas log set. High pressure natural gas systems require a regulator to reduce supply pressure to 10" w.c.

WARNING

Connecting directly to an unregulated propane/LPG tank can cause an explosion

The heater gas inlet connection is 3/8" NPT at the regulator, inlet on the right side facing the gas log. If a left side connection is required, the connecting pipe may be led under the rear of the gas logs or behind the grate for connection to the inlet.

NOTE: The millivolt valve has an internal regulator, thus the incoming gas line connects directly to the valve.

Test all gas joints from the gas meter to the appliance regulator for leaks using a gas analyzer or soap and water solution after completing connection. **DO NOT USE AN OPEN FLAME.**

Check the gas pressure with the appliance burning.

MANUAL CONTROL

Figure 6

The pressure regulator is preset and locked to discourage tampering. If the pressure is not as specified, replace with the correct part from the parts list in this manual.

Remove 1/8" NPT plug, located on side of regulator body. Install fitting and tubing to pressure gauge. After taking pressure reading, re-install test plug. Check for gas leaks.

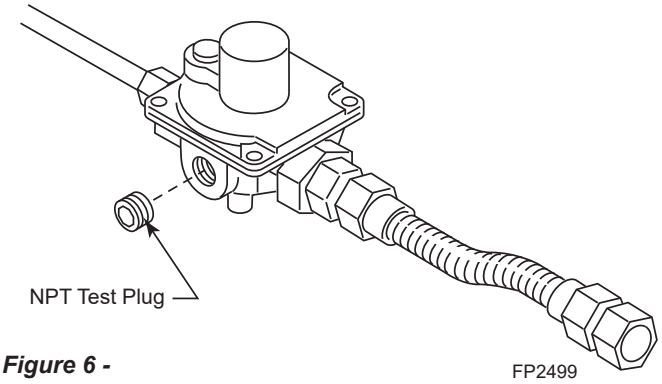

Figure 6 - Manual Control Pressure Test Point Location

MILLIVOLT CONTROL

Figure 7

The valve regulator controls the burner pressure which should be checked at the pressure test point. Turn captured screw counter clockwise 2 or 3 turns and then place tubing to pressure gauge over test point (Use test point labeled “OUT”). After taking pressure reading, be sure and turn captured screw clockwise firmly to re-seal. Do not over torque. Check for gas leaks.

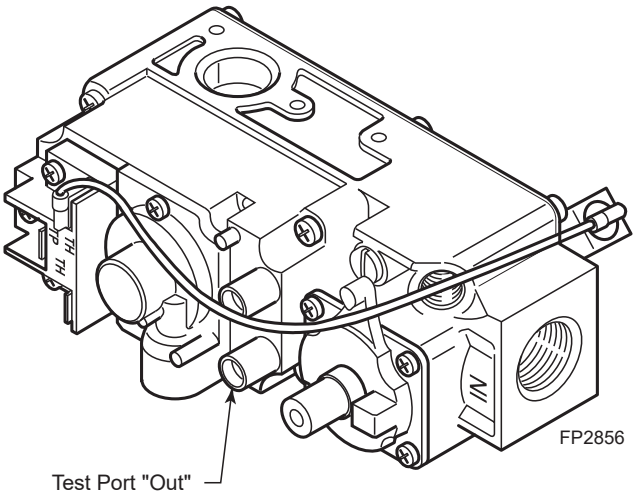

Figure 7 - Pressure Test Point Location

WARNING

Label all wires prior to disconnection when servicing controls.

Wiring errors can cause improper and dangerous operation.

Verify proper operation after servicing.

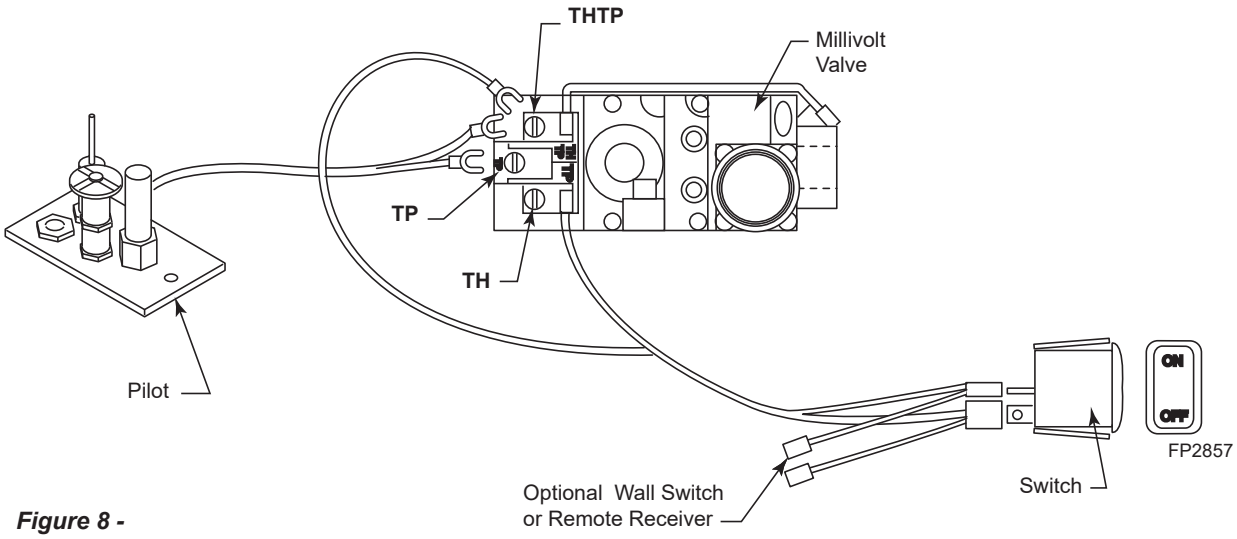

Figure 8 - Wiring Diagram

The Millivolt (thermopile) is a self powered combination gas control that does not require 110VAC to operate. See *Figure 8* and installation instructions provided with optional wall switch or remote control for wiring instructions. A maximum length of 15 feet of 18awg two conductor wire is to be used for wall switch. Note switches must be suitable for millivolt operation.

CHECKING SYSTEM OPERATION

The millivolt system and individual components may be checked with a millivolt meter having a 1-1000 mV range. Conduct each check shown in chart by connecting meter test leads to terminals as indicated.

Check Test	To Test	Connect Meter Leads To Terminals	Meter Reading Should Be
A	Complete System	TH & THTP	Minimum 100mV
B	Thermopile Output	TP & THTP	Minimum 325mV

A. Complete Millivolt System Check

(“A” Reading - Contacts CLOSED - Control knob “ON” - Main burner should turn ON)

1. If reading is more than 100 millivolts and the automatic valve still does not come on, replace the control.
2. If the closed circuit reading (“A” reading) is less than 100 millivolts, determine cause for low reading, proceed to Section B.

B. Thermopile Output Reading Check

(“B” Reading - Contacts OPEN - Main burner OFF

1. 325 millivolts minimum. If the minimum millivolt reading is not obtainable, readjust pilot for maximum millivolt output. If millivolt reading is still below minimum specified, replace thermopile.

LOG PLACEMENT

IMPORTANT: Remove logs, handling carefully by holding gently at each end. Gloves are recommended to prevent skin irritation from ceramic fibers. If skin becomes irritated, wash gently with soap and water.

DUZY II VDY24/18D2A

1. Install the rear log (#1) on the two locating pins of base. *Figure 9.* Visually check to verify the log is securely placed on the pins and in contact with the grate. *Figure 10*

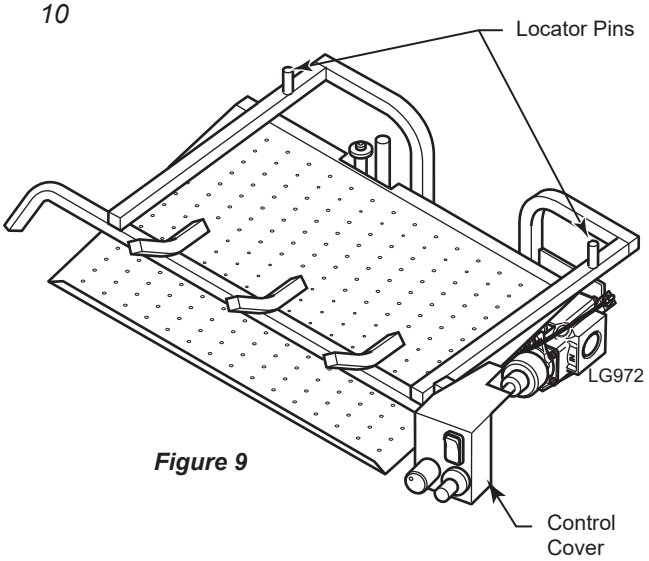

Figure 9

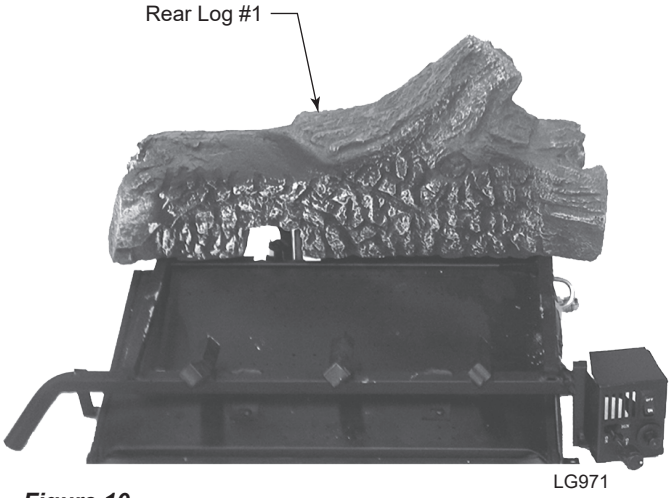

Figure 10

2. Install the right log (#2) on top of the control cover. Slide the log back until touching the rear log (#1). Visually check to verify the log is resting on the grate and control cover. *Figure 11*
3. Install the left log (#3) with its bottom groove resting on the right side of the grate bar. Slide the log back until touching the rear log (#1). Visually check to verify the log is resting on the grate. *Figure 12*

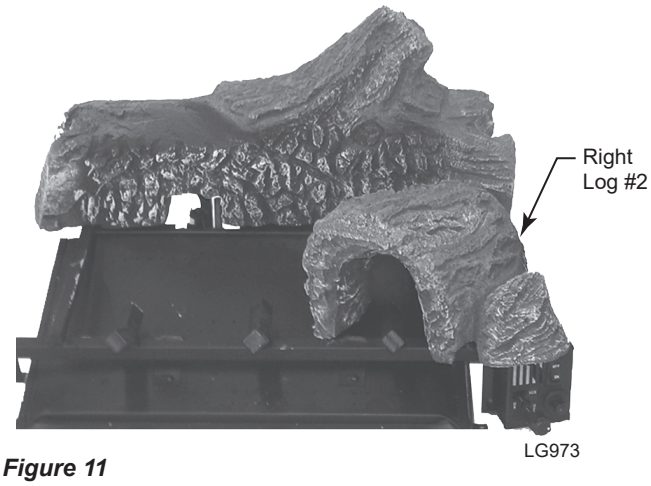

Figure 11

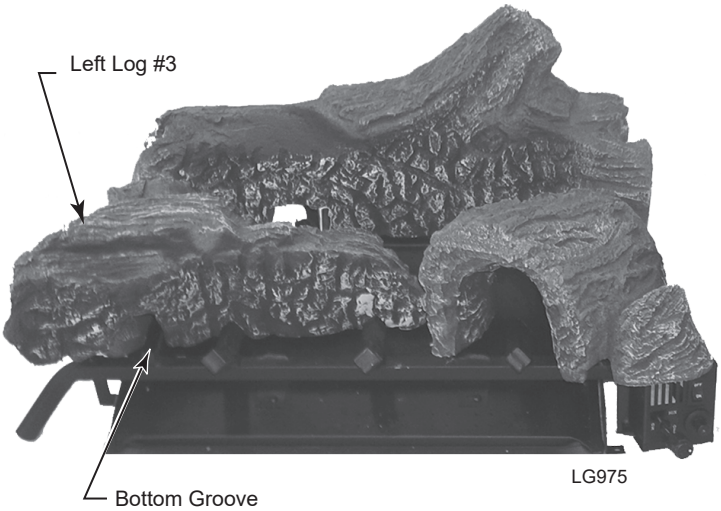

Figure 12

4. Install the top log (#4) with the base sitting on the rear log (#1) and the top sitting on log (#4). Visually check to verify the log is resting on the rear log (#1) and left log (#3). *Figure 13*

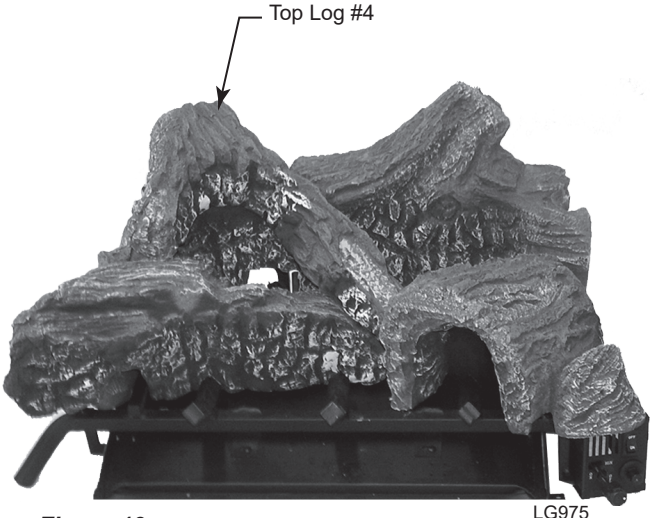

Figure 13

DUZY II VDY30D2A LOG PLACEMENT

1. Install the rear log (#1) on the two locating pins of base. *Figure 14*. Visually check to verify the log is securely placed on the pins and in contact with the grate. *Figure 15*

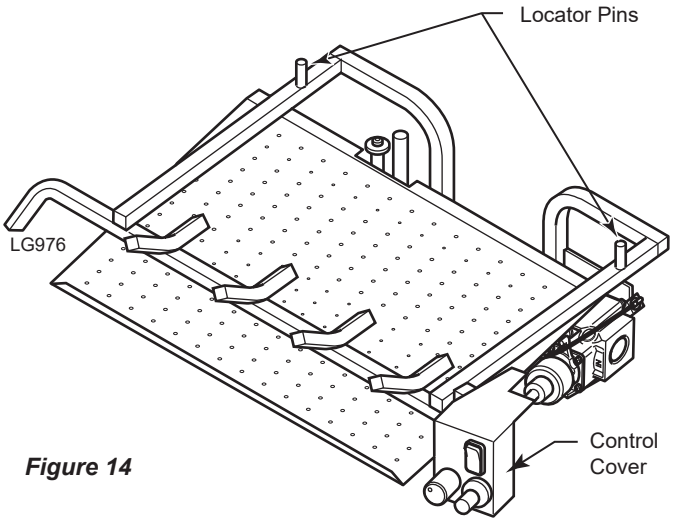

Figure 14

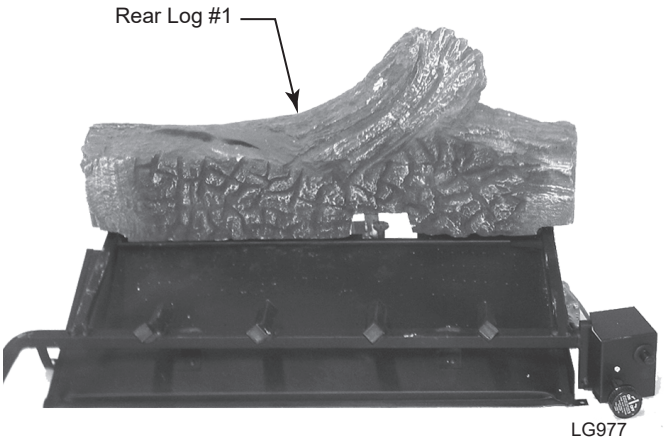

Figure 15

2. Install the right log (#2) on top of the control cover. Slide the log back until touching the rear log (#1). Visually check to verify the log is resting on the grate and control cover. *Figure 16*
3. Install the left log (#3) with its bottom groove resting on the right side of the grate bar. Slide the log back until touching the rear log (#1). Visually check to verify the log is resting on the grate. *Figure 17*
4. Install the top log (#4) with the base sitting on the rear log (#1) and the top sitting on log (#4). Visually check to verify the log is resting on the rear log (#1) and left log (#3). *Figure 18*

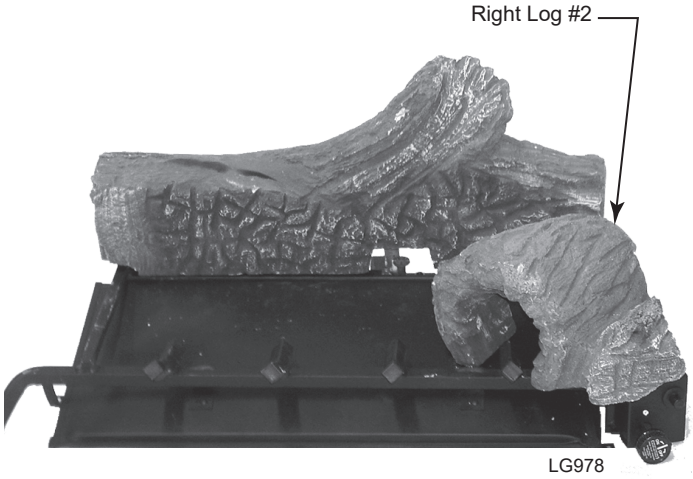

Figure 16

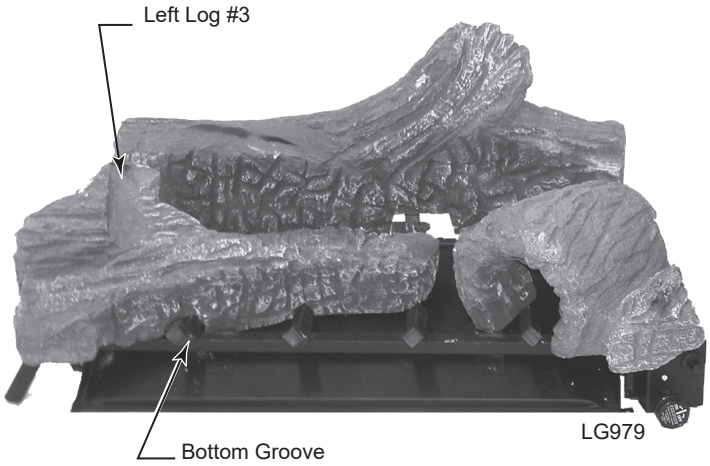

Figure 17

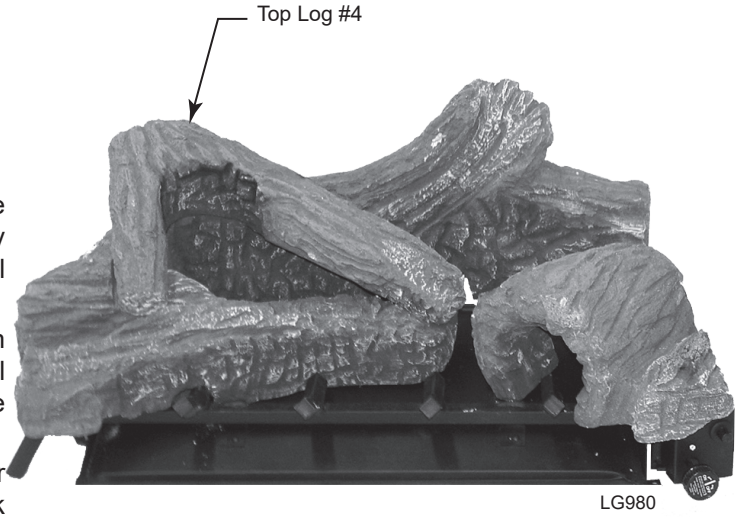

Figure 18

DUZY III VDY24/18D3R LOG PLACEMENT

1. Align pins on bottom of rear log #1 with pins on grate bar and place on grate. *Figures 19 and 20*

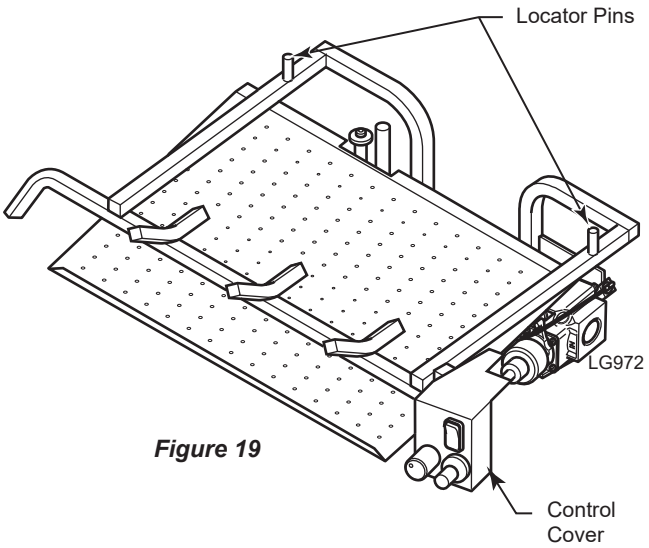

Figure 19

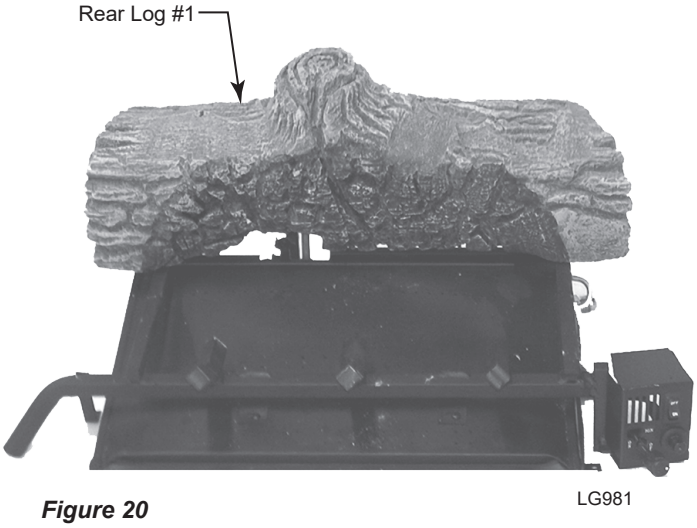

Figure 20

2. Place front left log #2 on left front of grate bar aligning cutout in bottom of log with grate bar. *Figure 21*
3. Place front right log #3 on right front of grate bar aligning cutout in bottom of log with grate bar. Make sure log #3 touches log #1. *Figure 21*
4. Place back end top middle log #4 on log #1. Press the side of log #4 against raised area of log #1. Align notch in front end of #4 with grate bar. *Figure 22*
5. Rest top right log #5 on log #3. *Figure 23*
6. Align top left log #6 with notches on log #2 and log #4. *Figure 23*

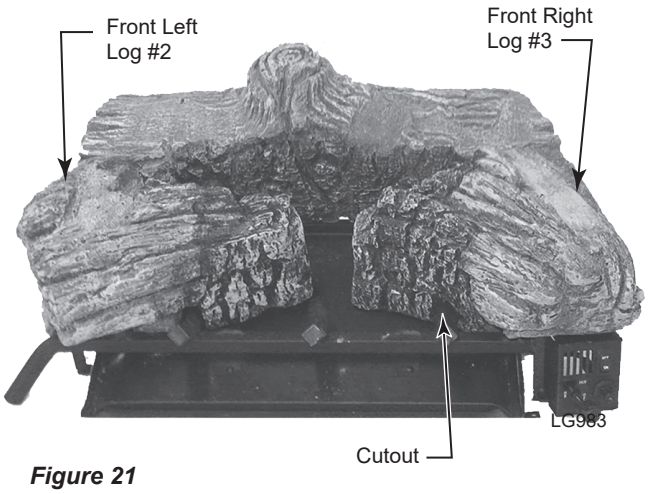

Figure 21

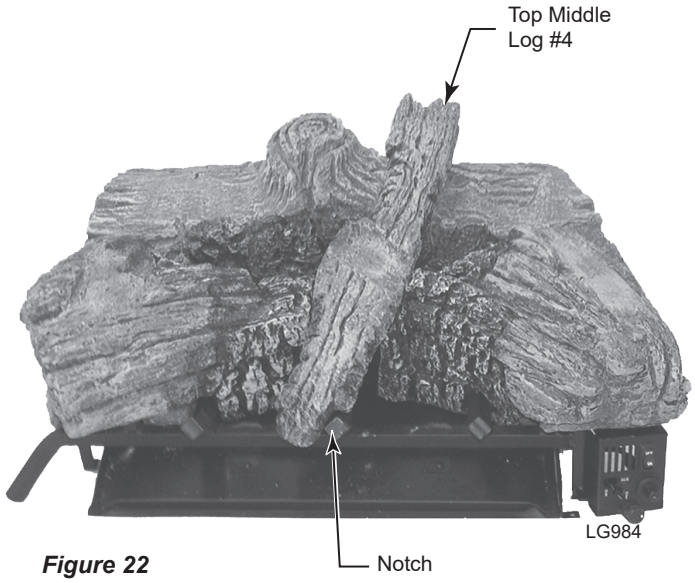

Figure 22

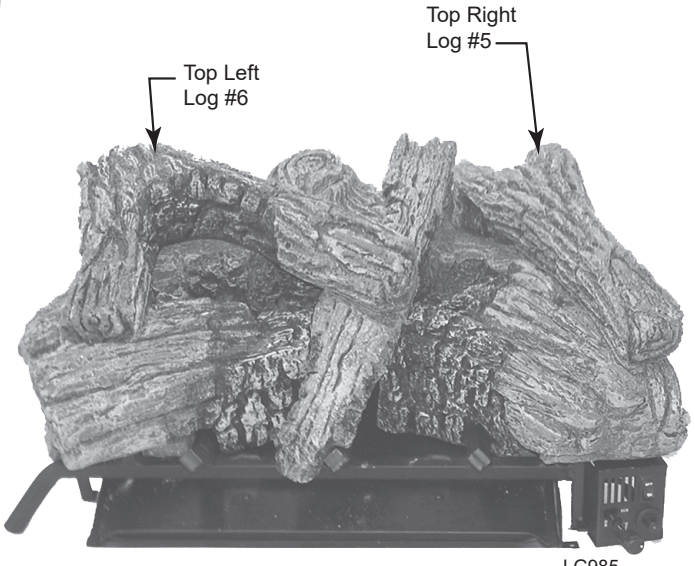

Figure 23

DUZY III VDY30D3R LOG PLACEMENT

1. Align pins on bottom of rear log #1 with pins on grate bar and place on grate. *Figures 24 and 25*

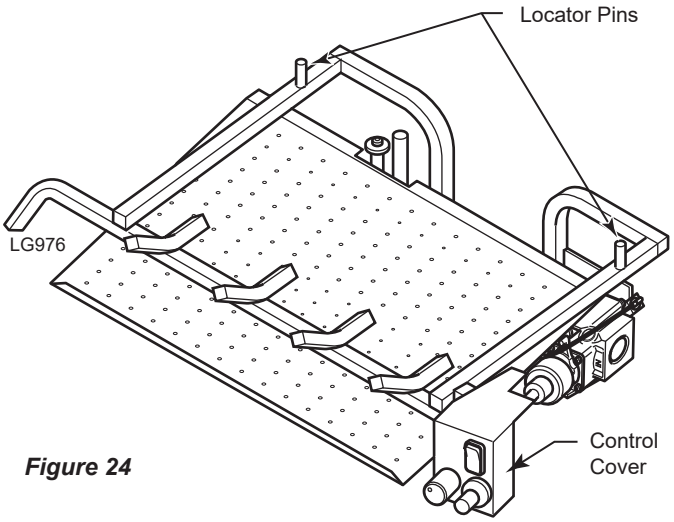

Figure 24

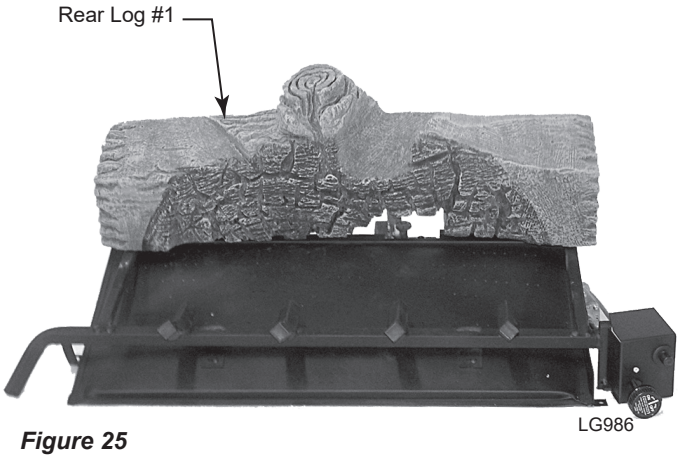

Figure 25

2. Place front left log #2 on left front of grate bar aligning cutout in bottom of log with grate bar. *Figure 26*
3. Place front right log #3 on right front of grate bar aligning cutout in bottom of log with grate bar. Make sure log #3 touches log #1. *Figure 26*
4. Place back end top middle log #4 on log #1. Press the side of log #4 up against raised area of log #1. Align notch in front end of #4 with grate bar. *Figure 27*
5. Rest top right log #5 on log #3. *Figure 28*
6. Align top left log #6 with notches on log #2 and log #4. *Figure 28*

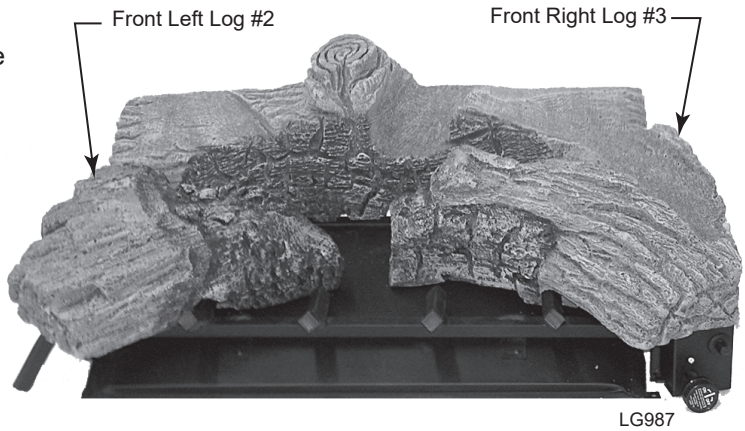

Figure 26

Figure 27

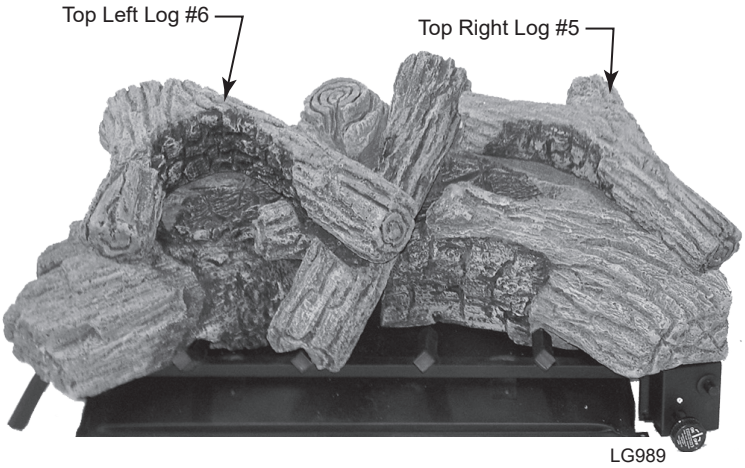

Figure 28

DUZY V LOG VDY24/18D5

1. Place back log (#1) on back of base aligning two (2) pins on base with holes in bottom of log. *Figures 29 and 30*

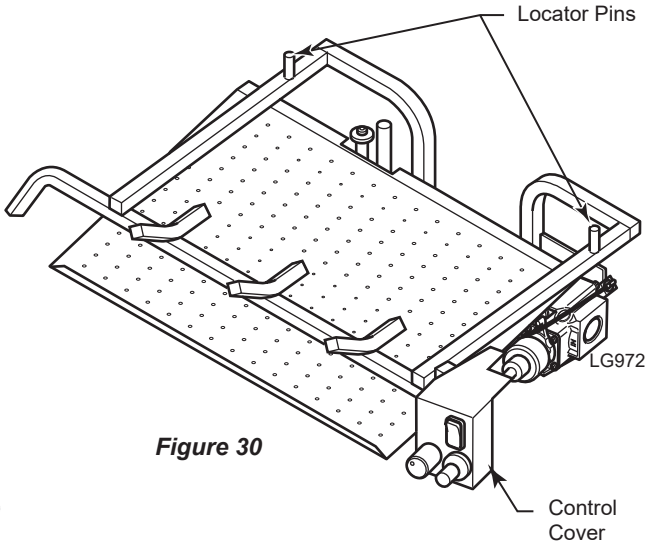

Figure 30

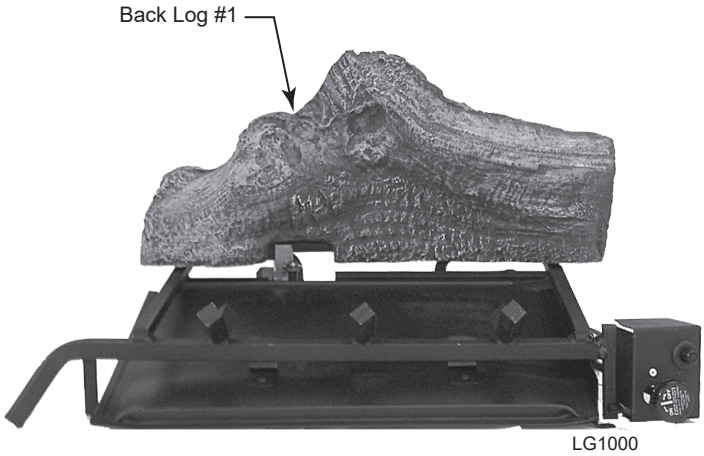

Figure 29

2. Placed bottom right log (#2) on right side of grate. *Figure 31*
3. Place bottom left log (#3) on left side of grate. *Figure 31*

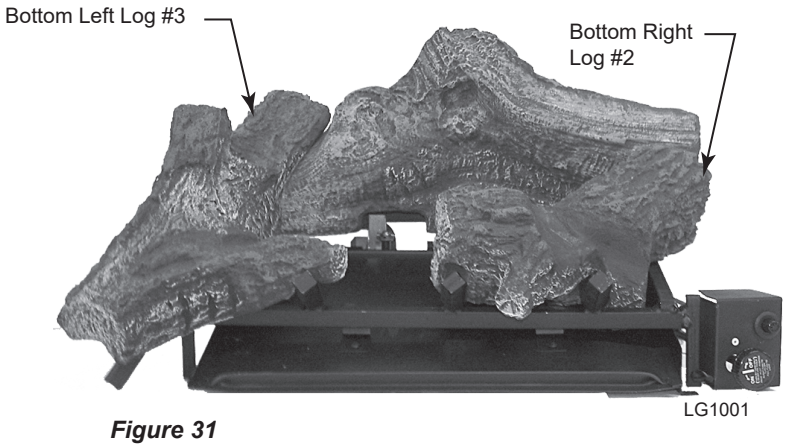

Figure 31

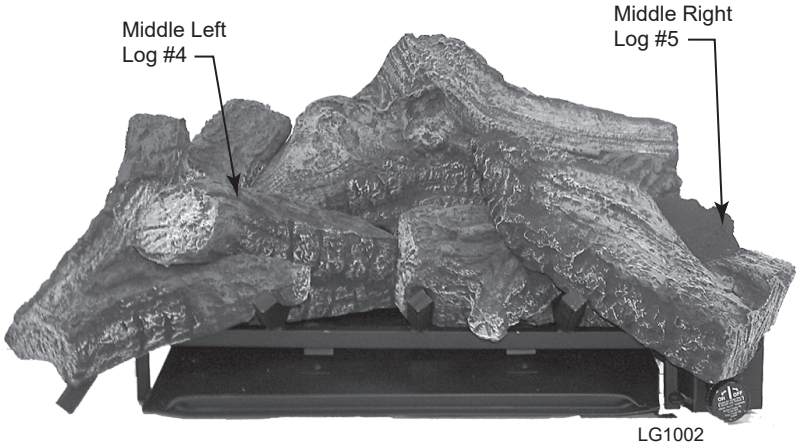

Figure 32

4. Place one end of middle left log (#4) on bottom left log. Rest other end of middle left log (#4) behind middle right log. *Figure 32*
5. Place middle right log (#5) on top of bottom right log. *Figure 32*

6. Rest top right log (#6) on back log and bottom right log. *Figure 33*
7. Place top left log (#7) on bottom left log. *Figure 33*

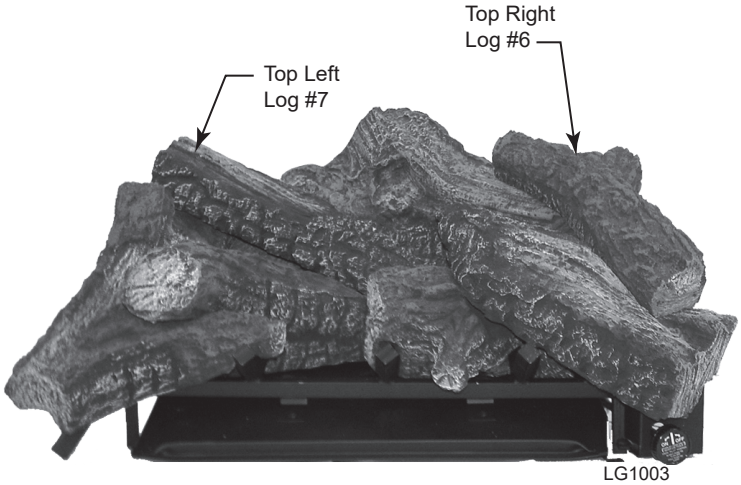

Figure 33

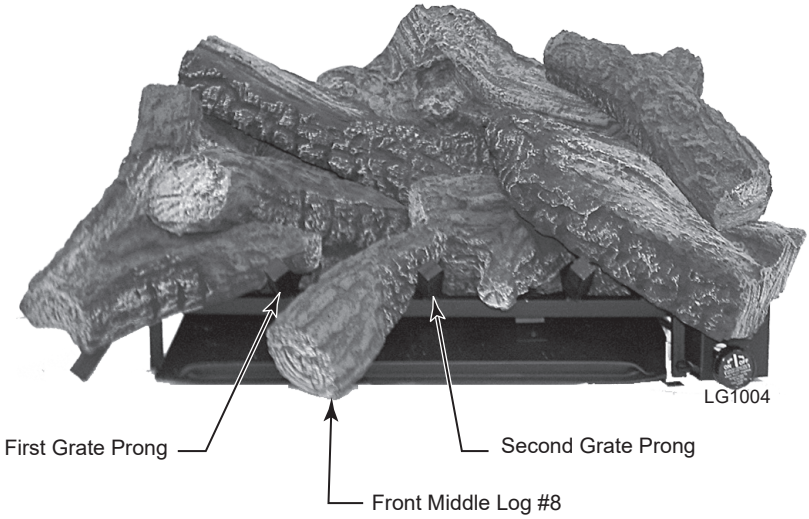

Figure 34

8. Place front middle log (#8) between the first and second prongs. *Figure 34*

DUZY V VDY30D5 LOG PLACEMENT

1. Place back log (#1) on back of base aligning two (2) pins on base with holes in bottom of log. *Figures 35 and 36*

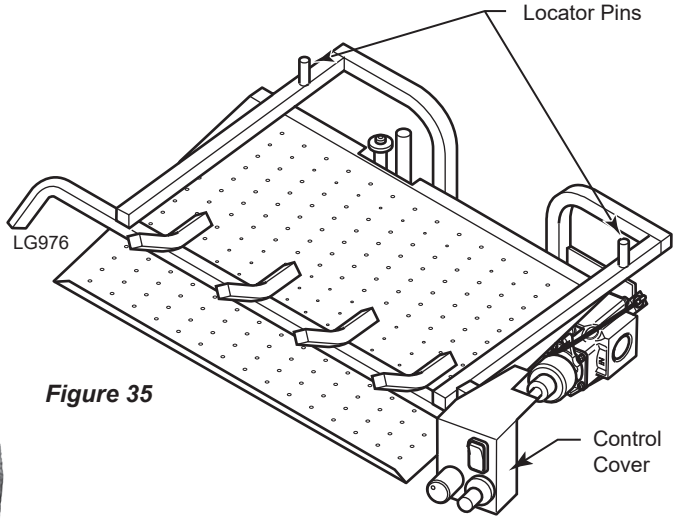

Figure 35

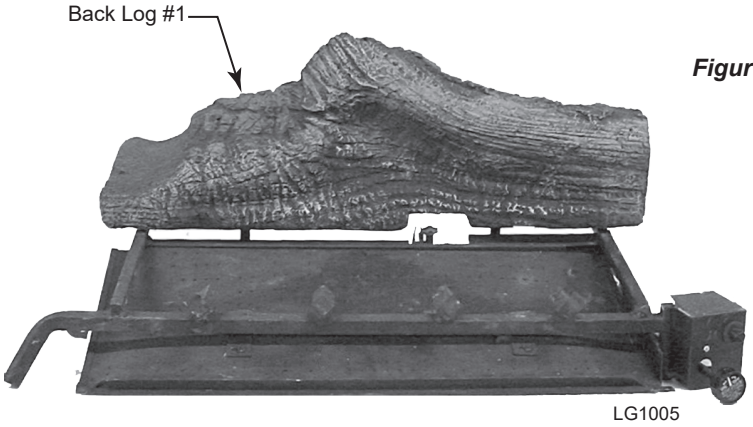

Figure 36

2. Place bottom right log (#2) on right side of grate in front of back log. *Figure 37*
3. Place bottom left log (#3) on left side of grate in front of back log. *Figure 37*

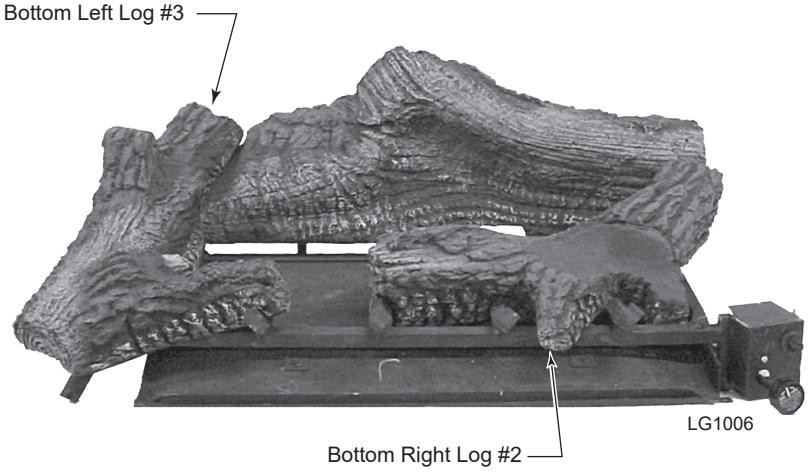

Figure 37

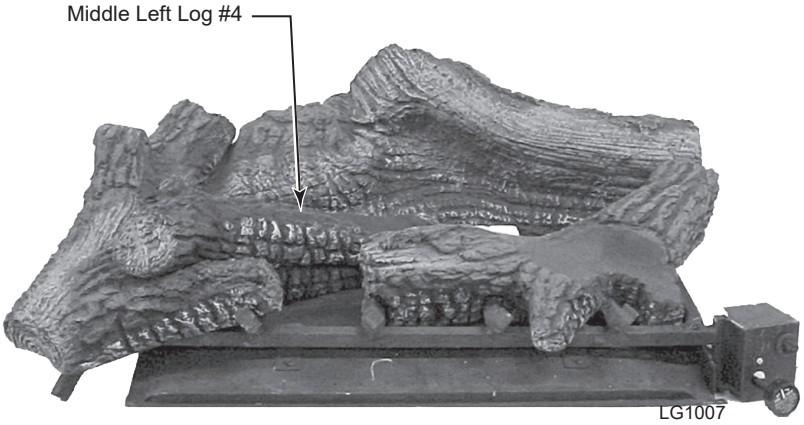

Figure 38

4. Place middle left log (#4) on top of bottom left log. *Figure 38*

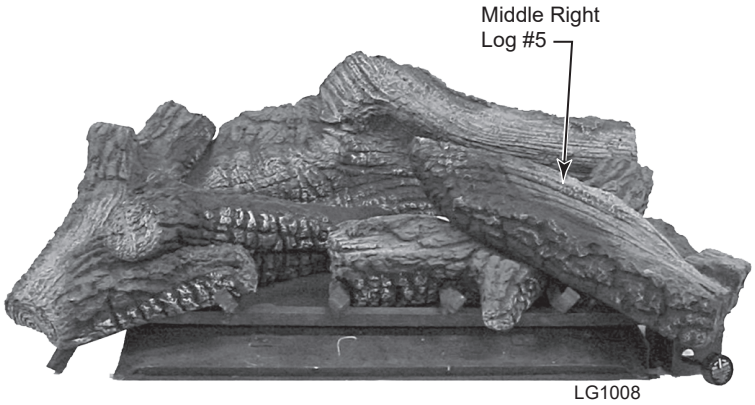

Figure 39

5. Place middle right log (#5) on top of bottom right log. *Figure 39*

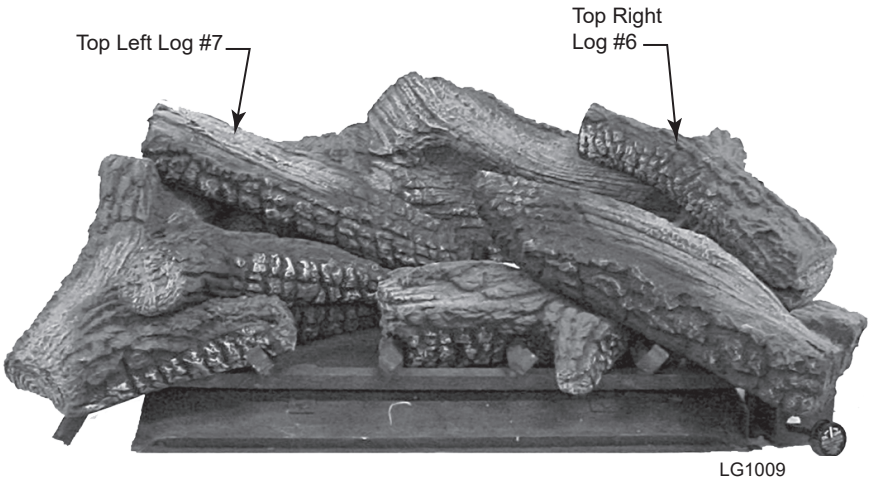

Figure 40

6. Place top right log (#6) on middle right log and back log. *Figure 40*
7. Place top left log (#7) on bottom left log and middle left log. *Figure 40*

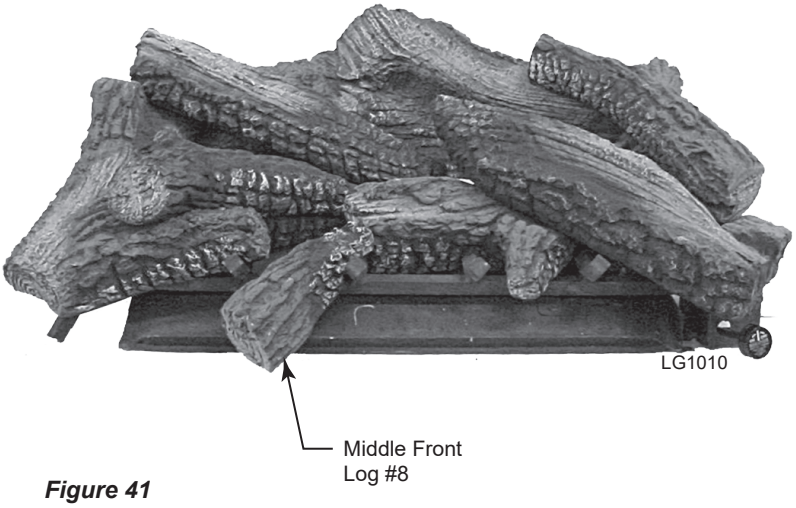

Figure 41

8. Place middle front log (#8) between second and third grate bars. *Figure 41*

PLACEMENT OF THE GLOWING EMBERS

Cover the burner pan with glowing embers (rock wool) provided. Tear pieces approximately 1/2" in size (roughly the size of a nickel) and cover the burner evenly.

DO NOT…

1. Pile the rock wool too thickly on pan.
2. Place rock wool higher than the top of the front grate bar.
3. Cover the pilot with rock wool.

PLACEMENT OF DECORATIVE VOLCANIC ROCK

Sprinkle volcanic rock in front of front glowing embers and to both sides. **DO NOT SPRINKLE ON BURNERS, PILOT OR LOGS.**

IMPORTANT: FIREPLACE DRAFT TEST DURING INITIAL INSTALLATION

It is critical to verify that your chimney is drafting properly because the fireplace and gas logs function as a system.

Although Hearth & Home Technologies goes to great lengths to design vented gas log sets that minimize sooting, all vented log sets will soot over time. Sooting normally appears as areas of a black powder-like substance on the logs. It is important to periodically clean and inspect the logs per the cleaning and servicing section of the manual.

WARNING

Fireplace systems that do not draft properly can increase the amount of soot produced by normal operation of the log set and in extreme cases can cause soot to be deposited within the room. This effect can be a sign of a blocked chimney, a faulty vent system or the result of negative pressure within the home. The dealer should be able to diagnose if a problem exists and be able to provide a solution to improve the venting of the fireplace.

FIREPLACE DRAFT TEST METHOD

To determine if your fireplace is drafting properly, turn the log set on. After the log set has been burning for about 10 minutes, place a match or smoke stick along the top and sides of the fireplace opening. If the flame or smoke is not pulled into the fireplace, then the **fireplace is not venting properly.** At this point the damper stop should be adjusted so that the damper opening is increased. If the problem remains after the open area of the damper is increased, then the fireplace system should be professionally inspected to determine if your firebox/chimney is venting properly.

CHECKING BURNER FLAMES

In normal operation at full rate after approximately 15 minutes, the following flame appearance should be observed.

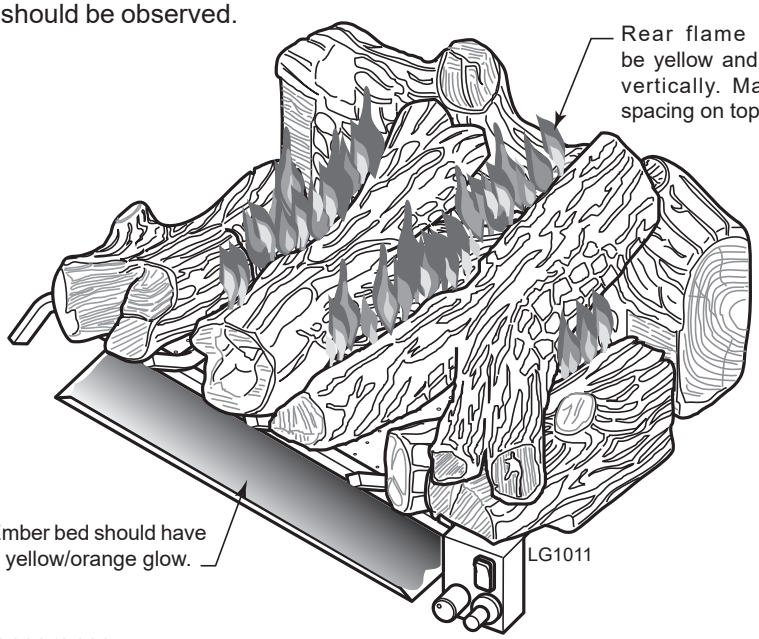

Figure 42 - Proper Flame Appearance

MILLIVOLT CONTROL WITH PILOT ONLY

PILOT FLAME APPEARANCE

The pilot flame must always be present when appliance is in operation. It should touch the thermocouple or thermopile body.

INITIAL STARTUP

During manufacturing, fabricating and shipping, various components of this appliance are treated with certain oils, films or bonding agents. These chemicals are not harmful, but may produce annoying smoke and smells as they are burned off during the initial operation of the appliance. The initial break-in operation should last 2-3 hours with the burner at the highest setting. The appliance must not be used with glassed doors in the closed position. This can result reduced combustion and overheating.

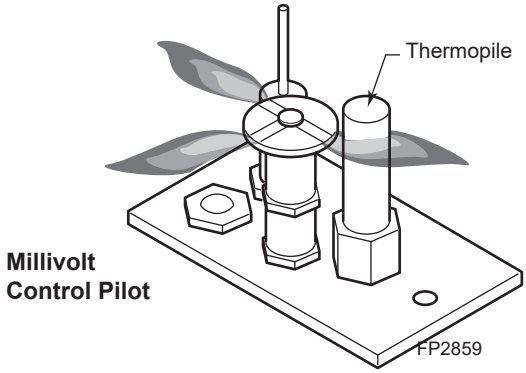

Figure 43 - Correct Pilot Flame Appearance

SAFETY INSTRUCTION FOR MANUAL AND MILLIVOLT CONTROL WITH PILOT

FOR YOUR SAFETY READ BEFORE LIGHTING

A. This appliance is equipped with an ignition device which automatically lights the pilot.

B. BEFORE OPERATING smell all around the appliance area for gas. Be sure to smell next to the floor because some gas is heavier than air and will settle on the floor.

WHAT TO DO IF YOU SMELL GAS:

- Do not attempt to light any appliance.
- Do not touch any electric switch; do not use any phone in your building.
- Immediately call your gas supplier from a neighbor's phone. Follow the gas supplier's instructions.
- If you cannot reach your gas supplier, call the fire department.

WARNING **If you do not follow these instruction exactly, a fire or explosion may result causing property damage, personal injury or loss of life.**

C. Use only your hand to push in, or turn the gas control knob. Never use tools. If the knob will not push in or turn by hand, don't try to repair it. Call a qualified service technician. Force or attempted repair may result in a fire or explosion.

D. Do not use this appliance if any part of it has been under water. Immediately call a qualified service technician to inspect the appliance and to replace any part of the control system and any gas control that has been under water.

MILLIVOLT CONTROL LIGHTING INSTRUCTIONS

1. **STOP!** Read the safety information label.
2. Make sure the manual shutoff valve is fully open.
3. This gas log set is equipped with an ignition device (piezo) which automatically lights the pilot. If piezo ignitor does not light the pilot, see instructions for *Match Lighting* below.
4. Turn gas control knob clockwise to the "OFF" position, and turn ON/OFF switch to "OFF" position.
5. Wait (5) minutes to clear out any gas. Then smell for gas, including near the floor. If you smell gas, **STOP!** Follow "B" in the safety information label. If you don't smell gas, go to next step.
6. From "OFF" position, turn the gas control knob counterclockwise to "*IGN*" position. Push in control knob for 5 seconds.

WARNING

Wait 30 seconds before readjusting the heater when the control knob has been turned down to a lower setting.

7. With the control knob pushed in, push in and release the piezo ignitor button to light the pilot.
8. Continue pushing the control knob in for a further 60 seconds to prevent the flame detector from shutting off the gas while the probe is warming up. Release the control knob.
9. Turn gas control knob counterclockwise to the "ON" position.
10. After the pilot has been lit for one minute, the burners can be turned on. Turn the ON/OFF switch to "ON" position.
11. If the gas logs will not operate, follow the instructions *To Turn Off Gas To Heater* and call your service technician or gas supplier.

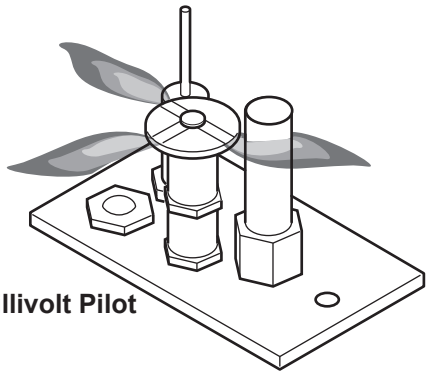

Millivolt Pilot

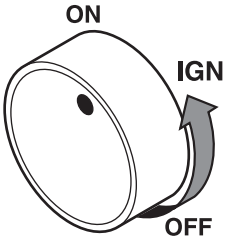

Control Knob

On/Off Switch

TO TURN OFF GAS TO HEATER

1. Turn control knob clockwise to "OFF" position to completely shut off the heater.
2. If applicable: Turn ON/OFF switch to "OFF" position.
3. If applicable: Turn off all electric power to the heater.

MATCH LIGHTING INSTRUCTIONS

1. Remove any items necessary for easy access to the pilot (for example: logs, screens, etc.).
2. Follow appropriate lighting instructions found previously. Instead of pushing and releasing the piezo button, light a match and hold the flame to the end of the pilot and ignite the pilot.
3. After control knob has been released and pilot stays lit, re-install any items that were removed for pilot access.
4. Call a qualified service technician for repair or replacement of the piezo ignitor.

REMOTE RECEIVER INSTALLATION

DO NOT PLACE THE REMOTE IN THE FIREPLACE IF ANY OF THE FOLLOWING CONDITIONS APPLY:

- The floor of the fireplace is recessed below the fireplace opening. *See Warnings on Page 6.*
- The fireplace has glass doors which when open reduces the opening width to 1½" or more below the stated minimum dimensions within the homeowner's manual.
- The floor of the fireplace is sheet metal without a brick covering.
- The remote receiver is attached but does not physically fit inside the fireplace with 2" clearance to the side wall.

INSTALL REMOTE RECEIVER

Connect wires according to remote receiver instructions. The female terminals should be connected to factory attached male terminals which are located on right hand side of the burner. *Figure 44*

NOTE: Do not let wires touch grate and/or burner.

For more details, see remote receiver instructions.

NOTE: The use of a thermostat is prohibited in vented log installations.

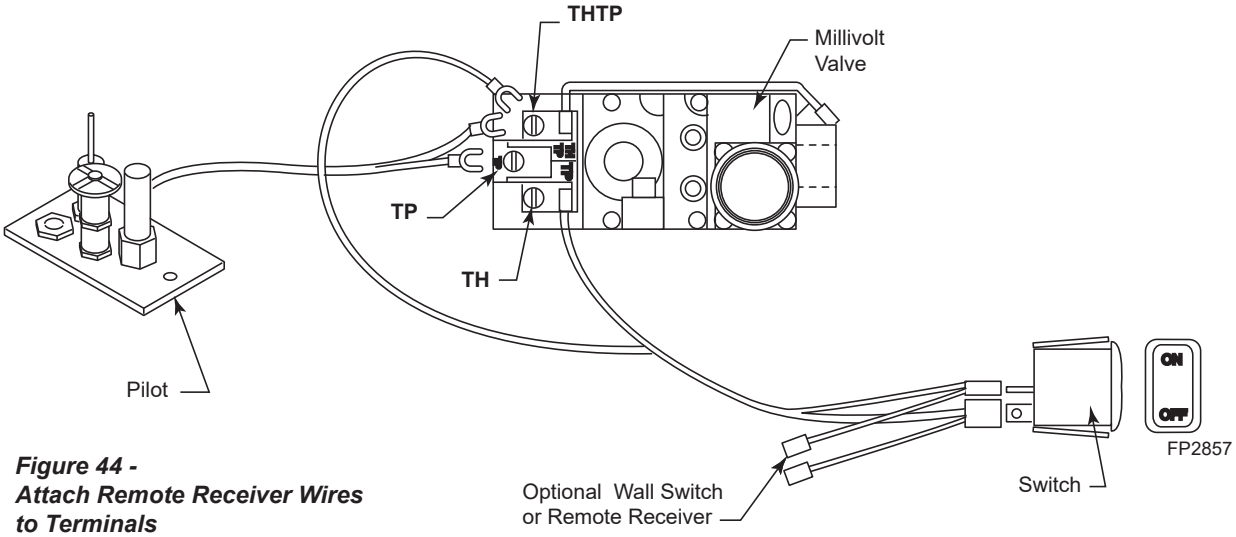

Figure 44 - Attach Remote Receiver Wires to Terminals

NOTE

- **Failure to follow instructions exactly will void warranty and could cause receiver to melt.**
- **Failure to place remote receiver in any location within the fireplace other than recommended location will void warranty and could cause receiver unit to melt.**

NOTE: Battery life decreases as temperature increases. Keep remote receiver in a low temperature area outside of fireplace to prolong battery life.

WARNING

Turn off gas logs and allow to cool before cleaning. Disconnect electrical power if applicable before cleaning or servicing.

Remove logs, handling carefully by holding gently at each end. Gloves are recommended to prevent skin irritation from ceramic fibers. If skin becomes irritated, wash gently with soap and water. See manual for correct log placement.

PERIODIC CLEANING - SEE PARTS DIAGRAM FOR LOCATION OF ITEMS DISCUSSED BELOW.

- Do not use cleaning fluid to clean logs or any part of gas logs.
- Logs - brush with soft bristle brush or vacuum with brush attachment.
- Vacuum loose particles and dust from the control and grate weldment.
- Inspect and clean burner air intake holes. Remove lint or particles with vacuum or brush. Failure to keep air intake holes clean will result in sooting and poor combustion.
- If embers (rock wool) have turned a rust color and become brittle, remove old embers (rock wool) from log set. Replace with new rock wool. Rock wool can be purchased from your local dealer. See log placement section for placement of embers.

ANNUAL CLEANING/INSPECTION - SEE PARTS DIAGRAM FOR LOCATION OF ITEMS DISCUSSED BELOW.

- Inspect and clean all burner ports.
- Verify burner and pilot flame pattern and log placement for proper operation.
- Verify smooth and responsive ignition of burner.
- Inspect and clean chimney.
- Inspect and clean burner air intake holes. Remove lint or particles with vacuum or brush. Failure to keep air intake holes clean will result in sooting and poor combustion.

WARNING

Turn off appliance and allow to cool before cleaning.
Only a qualified service person should service and repair the heater.

NOTE: All troubleshooting items are listed in order of operation.

Problem	Possible Cause	Solution
When ignitor button is pressed, there is no spark at pilot.	1. Ignitor electrode positioned wrong.	1. Replace ignitor.
	2. Ignitor electrode is broken.	2. Replace ignitor.
	3. Ignitor electrode not connected to ignitor cable.	3. Reconnect ignitor cable.
	4. Ignitor cable pinched or wet. Keep ignitor cable dry.	4. Free ignitor cable if pinched by any metal or tubing.
	5. Broken ignitor cable.	5. Replace ignitor cable.
	6. Bad piezo ignitor.	6. Replace piezo ignitor.
Appliance produces unwanted odors.	1. Appliance burning vapors from paint, hair spray, glues, etc.	1. Ventilate room. Stop using odor causing products while heater is running.
	2. Gas leak.	2. Locate and correct leaks.
	3. Fireplace spilling.	3. Check fireplace, adjust damper position to eliminate spillage (backdraft).
Appliance shuts off during use.	1. Low line pressure.	1. Locate and correct all leaks.
	2. Pilot is partially clogged.	2. Replace control valve.
	3. Defective thermopile.	
Gas odor even when control knob is in OFF position.	1. Gas leak. 2. Control valve defective.	1. Locate and correct all leaks. 2. Replace control valve.
When ignitor button is pressed, there is spark at pilot, but no ignition.	1. Gas supply turned off or manual shutoff valve closed.	1. Turn on gas supply or open manual shutoff valve.
	2. Control knob not in PILOT position.	2. Turn control knob to PILOT position.
	3. Control knob not pressed in while in PILOT position.	3. Press in control knob while in PILOT position.
	4. Air in gas lines when installed.	4. Continue holding down control knob. Repeat igniting operation until air is removed.
	5. Pilot is clogged.	5. Replace pilot assembly or get it serviced
	6. Gas regulator setting is not correct.	6. Replace gas regulator.

Problem	Possible Cause	Solution
Pilot lights, but flame goes out when control knob is released.	1. Control knob not fully pressed in.	1. Press in control knob fully.
	2. Control knob not pressed in long enough.	2. After ODS/pilot lights, keep control knob pressed in for 30 seconds.
	3. Manual shutoff valve not fully open.	3. Fully open manual shutoff valve.
One or both burners do not light after pilot is lit.	1. Burner orifice is clogged or damaged	1. Clean burner or replace burner orifice.
	2. Burner is damaged.	2. Replace burner orifice.
	3. Gas regulator defective.	3. Contact qualified service person.
Burner backfires during combustion.	1. Manifold Pressure is too low.	1. Contact local gas company.
	2. Burner orifice is clogged.	2. Clean burner or replace burner orifice.
Slight smoke or odor during initial operation.	1. Burner orifice is clogged or damaged.	1. Clean burner or replace burner orifice.
	2. Burner is damaged.	2. Replace burner.
	3. Gas regulator is defective.	3. Replace gas regulator.
Logs appear to smoke after initial operation.	1. Vapors from paint or curing process of logs.	1. Problem will stop after a few hours of operation. 2. Log heater is intended to be smokeless. Turn OFF heater and call qualified service person.
Heater produces a whistling noise when burner is lit.	1. Turning control knob to HIGH position when burner is cold. 2. Air in gas line. 3. Dirty or partially clogged burner orifices.	1. Turn control knob to ON position and let warm up for a minute. 2. Operate burner until air is removed from line. Have gas line checked by local gas company. 3. Clean burner or replace burner orifice.
No gas to pilot.	1. LP regulator shut down due to inlet pressure too high.	1. Verify LP tank regulator is installed and set at 11” to 13” w.c. 2. Replace regulator on heater.

WARNING **If the gas quality is bad, your pilot may not stay lit, the burners may produce soot and the heater may backfire when lit. If the gas quality or pressure is low, contact your local gas supplier immediately.**

HEARTH & HOME technologies

Service Parts **DUZY**

Duzy 24/18" Hearth Kit

Beginning Manufacturing Date: N/A
Ending Manufacturing Date: Active

VDY24/18NMP (Natural Gas Manual Control) - Ending Manufacturing Date: April 2019
VDY24/18PMP (Propane Manual Control) - Ending Manufacturing Date: April 2019
VDY24/18NVP (Natural Gas Millivolt Control) - Active
VDY24/18PVP (Propane Millivolt Control) - Active

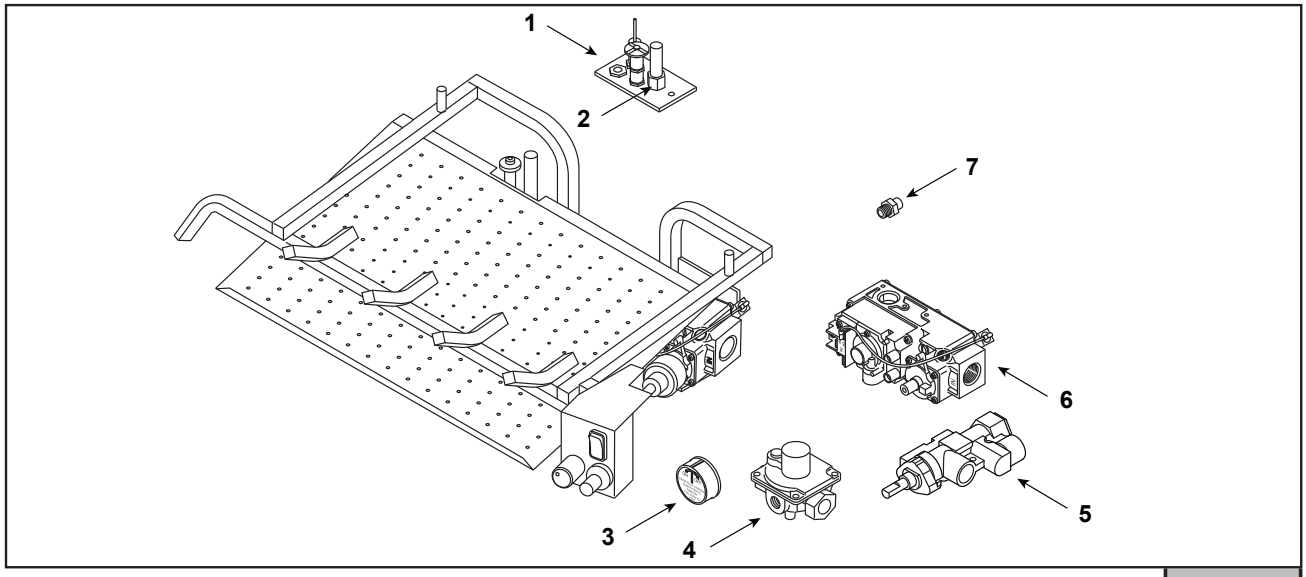

IMPORTANT: THIS IS DATED INFORMATION. Parts must be ordered from a dealer or distributor. **Hearth and Home Technologies does not sell directly to consumers**. Provide model number and serial number when requesting service parts from your dealer or distributor.

ITEM	DESCRIPTION	COMMENTS	PART NUMBER	Stocked at Depot
1	Pilot Assembly (Manual Control)	NG	27D8972K	Y
		Propane	27D8971K	Y
	Pilot Assembly (Millivolt Control)	NG	SRV27D8974	Y
		Propane	SRV27D8973	Y
2	Thermocouple/Thermopile	Manual Control	SRV28D0400	
3	Control Knob	Manual Control	SRV27D0602	
		Millivolt Control	SRV18D0603	
4	Regulator (Manual Control)	NG	SRV24D0305	Y
		Propane	SRV24D0306	Y
5	Control Valve (Manual Control)	NG & Propane	SRV27D8951	Y
6	Control Valve (Millivolt Control)	NG	27D8006K	Y
		Propane	27D8005K	Y
	Switch, On/Off (Millivolt Control)		SRV32D0232	Y
	Wire Harness (Millivolt Control)		SRV32D0240	Y
7	Injector (Manual Control)	NG	SRV32D0100	Y
		Propane	SRV32D0118	
	Injector (Millivolt Control)	NG	SRV32D0100	Y
		Propane	SRV32D0507	
	Piezo Igniter		SRV14D0503	Y

5/21

HEARTH & HOME technologies

Service Parts

DUZY

Duzy 30" Hearth Kit

Beginning Manufacturing Date: N/A
Ending Manufacturing Date: Active

VDY30NMP (Natural Gas Manual Control) - Ending Manufacturing Date: April 2019
VDY30NVP (Natural Gas Millivolt Control) - Active
VDY30PMP (Propane Manual Control) - Ending Manufacturing Date: April 2019
VDY30PVP (Propane Millivolt Control) - Active

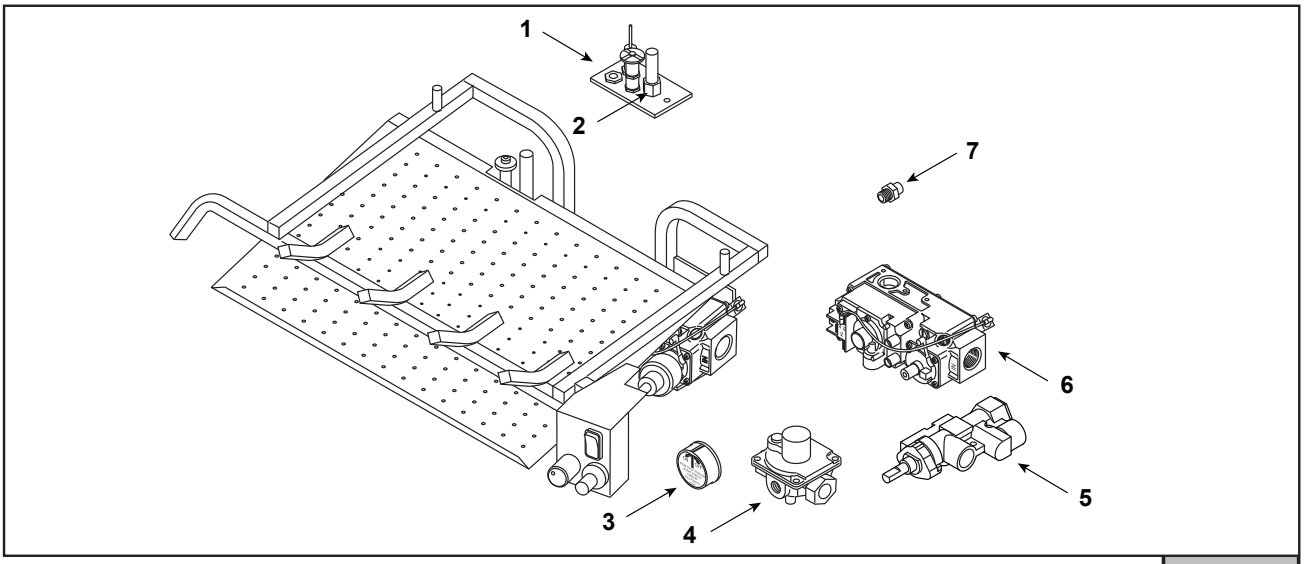

IMPORTANT: THIS IS DATED INFORMATION. Parts must be ordered from a dealer or distributor. **Hearth and Home Technologies does not sell directly to consumers**. Provide model number and serial number when requesting service parts from your dealer or distributor.

ITEM	DESCRIPTION	COMMENTS	PART NUMBER	Stocked at Depot
1	Pilot Assembly (Manual Control)	NG	27D8972K	Y
		Propane	27D8971K	Y
	Pilot Assembly (Millivolt Control)	NG	SRV27D8974	Y
		Propane	SRV27D8973	Y
2	Thermocouple/Thermopile	Manual Control	SRV28D0400	
3	Control Knob	Manual Control	SRV27D0602	
		Millivolt Control	SRV18D0603	
4	Regulator (Manual Control)	NG	SRV24D0305	Y
		Propane	SRV24D0306	Y
5	Control Valve (Manual Control)	NG & Propane	SRV27D8951	Y
6	Control Valve (Millivolt Control)	NG	27D8006K	Y
		Propane	27D8005K	Y
	Switch, On/Off (Millivolt Control)		SRV32D0232	Y
	Wire Harness (Millivolt Control)		SRV32D0240	Y
7	Injector (Manual Control)	NG	32D0090	
		Propane	SRV32D0113	
	Injector (Millivolt Control)	NG	SRV32D0090	
		Propane	SRV32D0117	
	Piezo Igniter		SRV14D0503	Y

5/21

HEARTH & HOME technologies

Service Parts

VDY24/18D2A

Duzy II 24”-18” Log Set

Beginning Manufacturing Date: N/A
Ending Manufacturing Date: Active

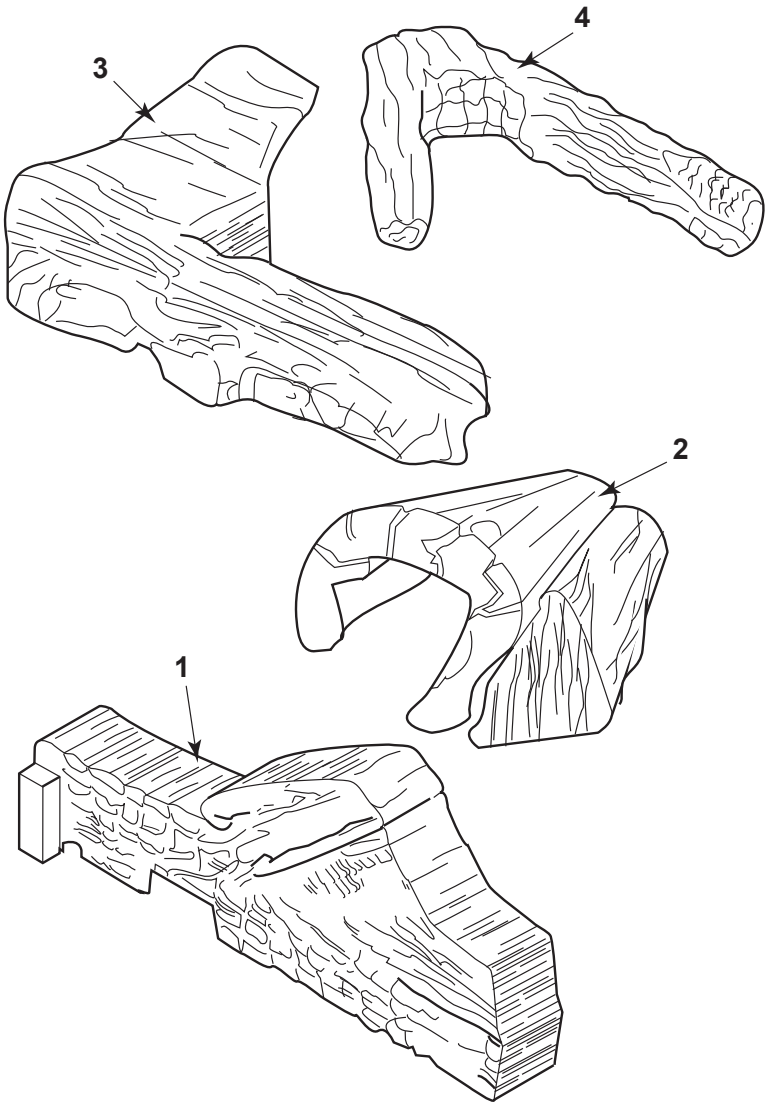

IMPORTANT: THIS IS DATED INFORMATION. Parts must be ordered from a dealer or distributor. **Hearth and Home Technologies does not sell directly to consumers**. Provide model number and serial number when requesting service parts from your dealer or distributor.

ITEM	DESCRIPTION	COMMENTS	PART NUMBER	Stocked at Depot
1	Rear Log		32D0400K	
2	Right Log		32D0401K	
3	Left Log		32D0402K	
4	Top Log		32D0403K	

5/21

HEARTH & HOME technologies

Service Parts

VDY30D2A

Duzy II 30" Log Set

Beginning Manufacturing Date: N/A
Ending Manufacturing Date: Active

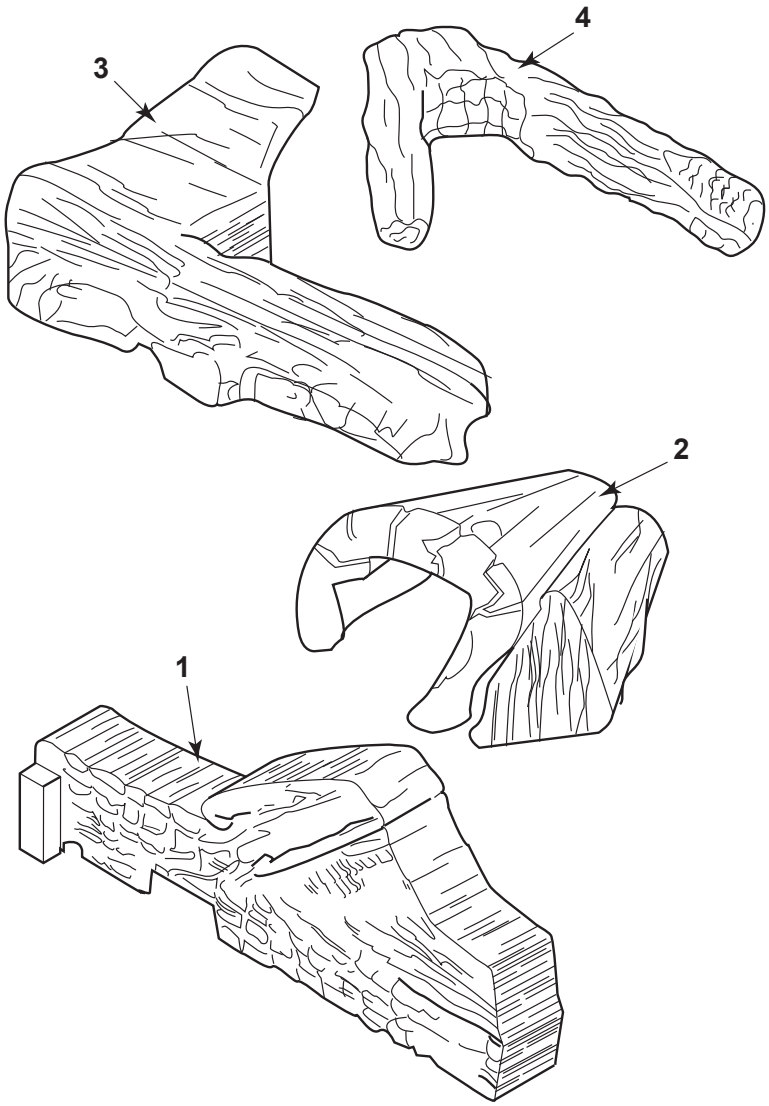

IMPORTANT: THIS IS DATED INFORMATION. Parts must be ordered from a dealer or distributor. **Hearth and Home Technologies does not sell directly to consumers**. Provide model number and serial number when requesting service parts from your dealer or distributor.

ITEM	DESCRIPTION	COMMENTS	PART NUMBER	Stocked at Depot
1	Rear Log		32D0410K	
2	Right Log		32D0411K	
3	Left Log		32D0412K	
4	Top Log		32D0413K	

5/21

HEARTH & HOME technologies

Service Parts

VDY24/18D3R

Duzy III 24”-18” Log Set

Beginning Manufacturing Date: N/A
Ending Manufacturing Date: Active

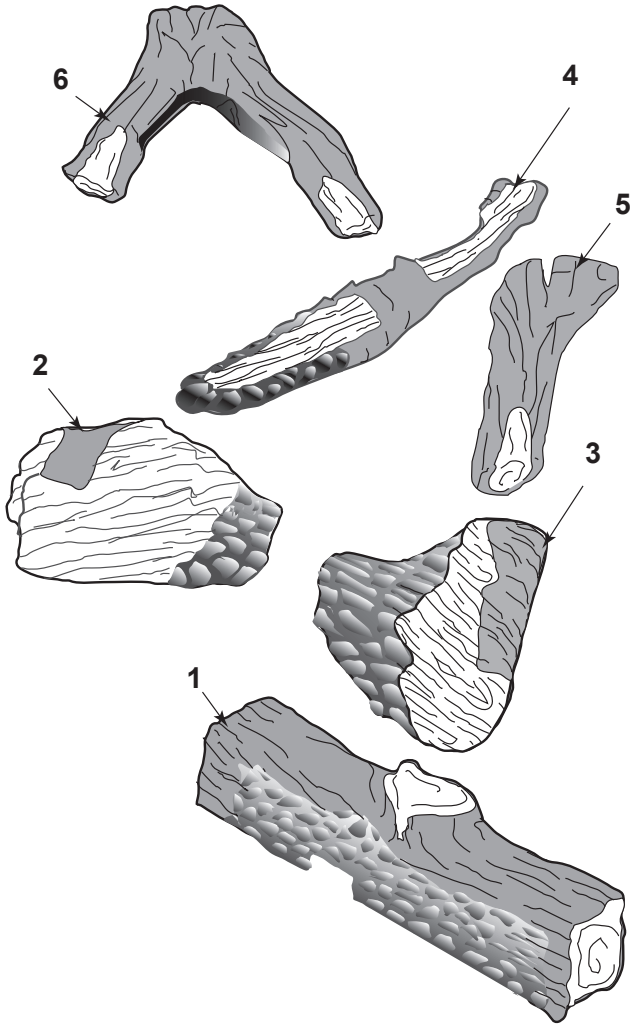

IMPORTANT: THIS IS DATED INFORMATION. Parts must be ordered from a dealer or distributor. **Hearth and Home Technologies does not sell directly to consumers**. Provide model number and serial number when requesting service parts from your dealer or distributor.

ITEM	DESCRIPTION	COMMENTS	PART NUMBER	Stocked at Depot
1	Rear Log		SRV32D2118	
2	Front Left Log		SRV32D2117	
3	Front Right Log		SRV32D2116	
4	Top Middle Log		SRV32D2114	
5	Top Right Log		SRV32D2113	
6	Top Left Log		SRV32D2115	

5/21

HEARTH & HOME technologies™

Service Parts

VDY30D3R

Duzy III 30" Log Set

Beginning Manufacturing Date: N/A
Ending Manufacturing Date: Active

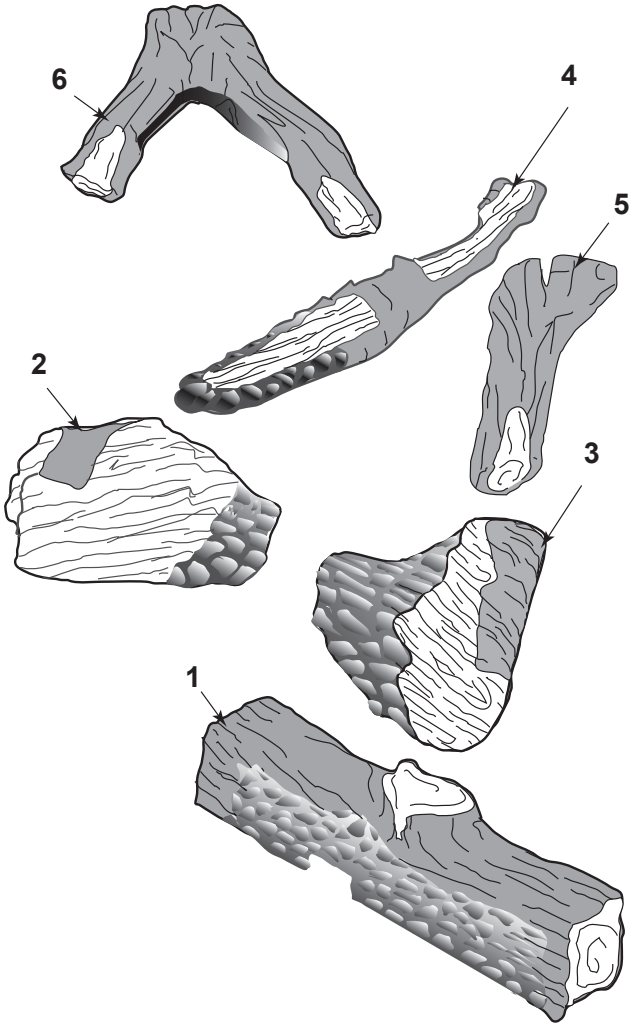

IMPORTANT: THIS IS DATED INFORMATION. Parts must be ordered from a dealer or distributor. **Hearth and Home Technologies does not sell directly to consumers**. Provide model number and serial number when requesting service parts from your dealer or distributor.

ITEM	DESCRIPTION	COMMENTS	PART NUMBER	Stocked at Depot
1	Rear Log		SRV32D2124	
2	Front Left Log		SRV32D2123	
3	Front Right Log		SRV32D2122	
4	Top Middle Log		SRV32D2120	
5	Top Right Log		SRV32D2119	
6	Top Left Log		SRV32D2121	

5/21

HEARTH & HOME technologies

Service Parts

VDY24/18D5

Duzy V 24”-18” Log Set

Beginning Manufacturing Date: N/A
Ending Manufacturing Date: Active

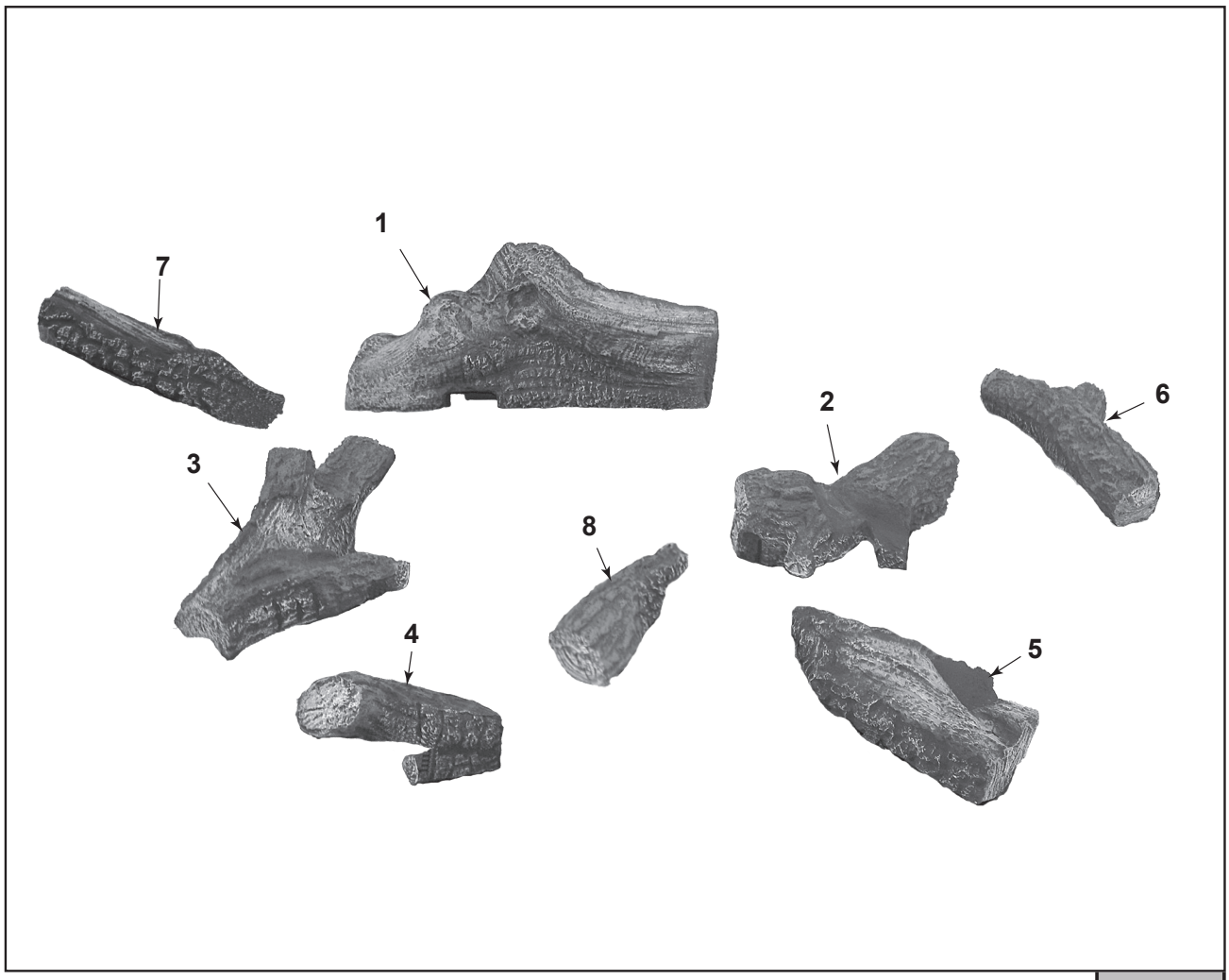

IMPORTANT: THIS IS DATED INFORMATION. Parts must be ordered from a dealer or distributor. **Hearth and Home Technologies does not sell directly to consumers**. Provide model number and serial number when requesting service parts from your dealer or distributor.

ITEM	DESCRIPTION	COMMENTS	PART NUMBER	Stocked at Depot
1	Back Log		32D3121K	
2	Bottom Right Log		32D3122K	
3	Bottom Left Log		32D3123K	
4	Middle Left Log		32D3124K	
5	Middle Right Log		32D3125K	
6	Top Right Log		32D3126K	
7	Top Left Log		32D3127K	
8	Front Middle Log		32D3128K	

5/21

HEARTH & HOME technologies

Service Parts

VDY30D5

Duzy V 30" Log Set

Beginning Manufacturing Date: N/A
Ending Manufacturing Date: Active

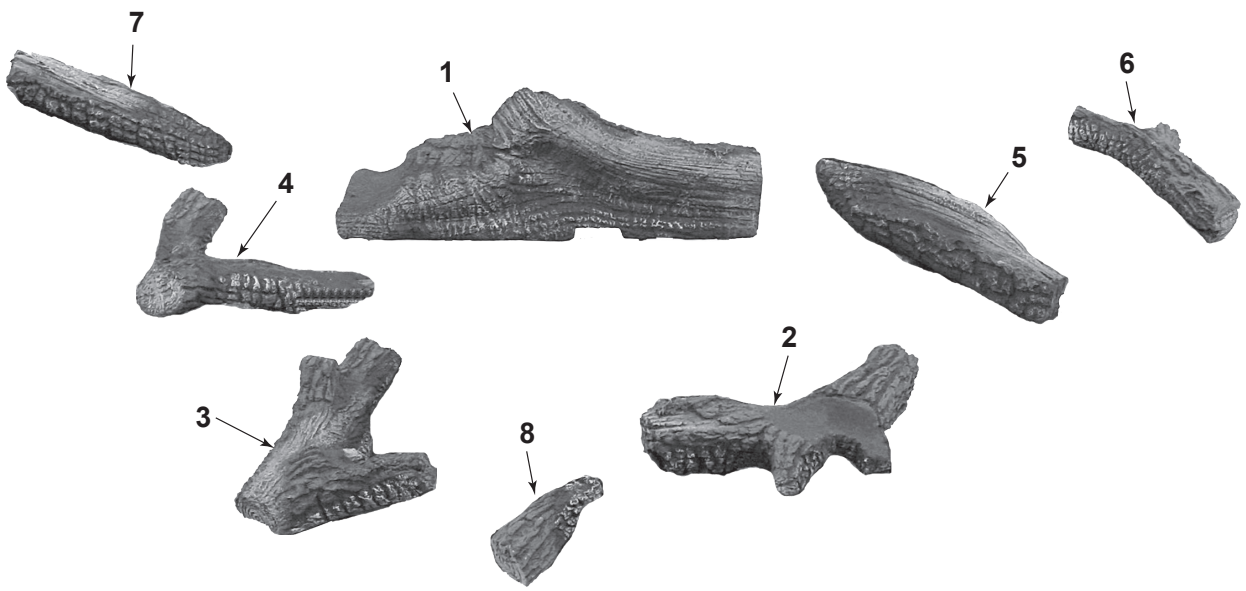

IMPORTANT: THIS IS DATED INFORMATION. Parts must be ordered from a dealer or distributor. **Hearth and Home Technologies does not sell directly to consumers**. Provide model number and serial number when requesting service parts from your dealer or distributor.

ITEM	DESCRIPTION	COMMENTS	PART NUMBER	Stocked at Depot
1	Back Log		32D3131K	
2	Bottom Right Log		32D3132K	
3	Bottom Left Log		32D3133K	
4	Middle Left Log		32D3134K	
5	Middle Right Log		32D3135K	
6	Top Right Log		32D3136K	
7	Top Left Log		32D3137K	
8	Front Middle Log		32D3138K	

5/21

ACCESSORIES

Flex Connector	Flexcon30	All models
Wall Kit Switch w/20' wire	MVWS	Millivolt
On/Off Remote Control Kits	RCB, RCM, TLM, WWTD	Millivolt
Remote Receiver Cover - Embers	RRCE	Millivolt
Remote Receiver Cover - Metal	RRCM	Millivolt
Volcanic Rock	VR1000A	All models
Decorative Ceramic Fiber Embers	EMBERS	All models
Ceramic Fiber Cinders	CINDERS	All models
Rock Wool	DV-RWA	All Models

Massachusetts Residents Only — Please read and follow these special requirements

NOTE REGARDING VENTED PRODUCTS

This product must be installed by a licensed plumber or gas fitter when installed within the Commonwealth of Massachusetts.

Any residence with a direct vent product must have a CO detector installed in the residence.

Installation of the fireplace or vented gas log in the State of Massachusetts requires the damper to be permanently removed or welded in the fully open position.

In addition, a naturally vented gas log may not be installed in a bedroom or bathroom in the State of Massachusetts.

Flex line installation must not exceed 36 inches and must have a T shutoff valve.

NOTE REGARDING VENT FREE PRODUCTS

This product must be installed by a licensed plumber or gas fitter when installed within the Commonwealth of Massachusetts.

In addition, vent free products may not be installed in a bedroom or bathroom regardless of size or type in the State of Massachusetts.

Flex line installation must not exceed 36 inches and must have a T shutoff valve.

CARBON MONOXIDE DETECTOR REQUIREMENTS

(2) Revise 10.8.3 by adding the following additional requirements:

(a) For all side wall horizontally vented gas fueled equipment installed in every dwelling, building or structure used in whole or in part for residential purposes, including those owned or operated by the Commonwealth and where the side wall exhaust vent termination is less than seven (7) feet above finished grade in the area of the venting, including but not limited to decks and porches, the following requirements shall be satisfied:

1. **Installation of carbon monoxide detectors.** At the time of installation of the side wall horizontal vented gas fueled equipment, the installing plumber or gas fitter shall observe that a hard wired carbon monoxide detector with an alarm and battery back-up is installed on the floor level where the gas equipment is to be installed. In addition, the installing plumber or gas fitter shall observe that a battery operated or hard wired carbon monoxide detector with an alarm is installed on each additional level of the dwelling, building or structure served by the side wall horizontal vented gas fueled equipment. It shall be the responsibility of the property owner to secure the services of qualified licensed professionals for the installation of hard wired carbon monoxide detectors

a. In the event that the side wall horizontally vented gas fueled equipment is installed in a crawl space or an attic, the hard wired carbon monoxide detector with alarm and battery back-up may be installed on the next adjacent floor level.

b. In the event that the requirements of this subdivision can not be met at the time of completion of installation, the owner shall have a period of thirty (30) days to comply with the above requirements; provided, however, that during said thirty (30) day period, a battery operated carbon monoxide detector with an alarm shall be installed.

2. **Approved Carbon Monoxide Detectors.** Each carbon monoxide detector as required in accordance with the above provisions shall comply with NFPA 720 and be ANSI/UL 2034 listed and IAS certified.

3. **Signage.** A metal or plastic identification plate shall be permanently mounted to the exterior of the building at a minimum height of eight (8) feet above grade directly in line with the exhaust vent terminal for the horizontally vented gas fueled heating appliance or equipment. The sign shall read, in print size no less than one-half (1/2) inch in size, “GAS VENT DIRECTLY BELOW. KEEP CLEAR OF ALL OBSTRUCTIONS.”

4. **Inspection.** The state or local gas inspector of the side wall horizontally vented gas fueled equipment shall not approve the installation unless, upon inspection, the inspector observes carbon monoxide detectors and signage installed in accordance with the provisions of 248 CMR 5.08(2)(a)1 through 4.

(b) **Exemptions:** The following equipment is exempt from 248 CMR 5.08(2)(a)1 through 4:

1. The equipment listed in Chapter 10 entitled "Equipment Not Required To Be Vented" in the most current edition of NFPA 54 as adopted by the Board; and

2. Product Approved side wall horizontally vented gas fueled equipment installed in a room or structure separate from the dwelling, building or structure used in whole or in part for residential purposes.

(c) **Manufacturer requirements — Gas Equipment Venting System Provided.** When the manufacturer of Product Approved side wall horizontally vented gas equipment provides a venting system design or venting system components with the equipment, the instructions provided by the manufacturer for installation of the equipment and the venting system shall include:

1. Detailed instructions for the installation of the venting system design or the venting system components; and

2. A complete parts list for the venting system design or venting system.

(d) **Manufacturer requirements — Gas Equipment Venting System Not Provided.** When the manufacturer of a Product Approved side wall horizontally vented gas fueled equipment does not provide the parts for venting the flue gases, but identifies “special venting systems,” the following requirements shall be satisfied by the manufacturer:

1. The referenced "special venting system" instructions shall be included with the appliance or equipment installation instructions; and

2. The “special venting systems” shall be Product Approved by the Board, and the instructions for that system shall include a parts list and detailed installation instructions.

(e) A copy of all installation instructions for all Product Approved side wall horizontally vented gas fueled equipment, all venting instructions, all parts lists for venting instructions, and/or all venting design

Hearth & Home Technologies LLC
LIMITED LIFETIME WARRANTY

Hearth & Home Technologies LLC ("HHT") extends the following warranty for HHT gas, wood, pellet and electric hearth appliances (each a "Product" and collectively, the "Product(s)") and certain component parts set forth in the table below ("Component Part(s)") that are purchased from a HHT authorized dealer or distributor.

WARRANTY COVERAGE:

HHT warrants that the Products and their Component Parts will be free from defects in materials and workmanship for the applicable period of Warranty coverage set forth in the table below ("Warranty Period"). If a Product or Component Parts are found to be defective in materials or workmanship during the applicable Warranty Period, HHT will, at its option, repair the applicable Component Part(s), replace the applicable Component Part(s), or refund the purchase price of the applicable Product(s). The maximum amount recoverable under this Warranty is limited to the purchase price of the Product. This Warranty is transferable from the original purchaser to subsequent owners, but the Warranty Period will not be extended in duration or expanded in coverage for any such transfer. This Warranty is subject to conditions, exclusions, and limitations as described below.

WARRANTY PERIOD:

Warranty coverage begins at the date of installation. In the case of new home constructions, Warranty coverage begins on the date of first occupancy of the dwelling or six months after the sale of the Product(s) by an independent, authorized HHT dealer or distributor, whichever occurs earlier. However, the Warranty coverage shall commence no later than 24 months following the date of Product shipment from HHT, regardless of the installation or occupancy date.

The term "Lifetime" in the table below is defined as: 20 years from the beginning date of warranty coverage for gas appliances, and 10 years from the beginning date of warranty coverage for wood and pellet appliances. These time periods reflect the minimum expected useful lives of the designated Component Parts under normal operating conditions.

Warranty Period		HHT Manufactured Appliances and Venting					
Component Parts	Labor	Gas	Pellet	Wood	Electric	Venting	Component Parts Covered by this Warranty
1 Year		X	X	X		X	All parts including handles, external enameled components and other material except as covered by Warranty Conditions, Warranty Exclusions, and Warranty Limitations listed
2 Years					X		All parts except as covered by Warranty Conditions, Warranty Exclusions, and Warranty Limitations listed
2 years			X	X			Igniters, Auger Motors, Electronic Components, and Glass
		X					Electrical components limited to modules, remotes/wall switches, valves, pilots, blowers, junction boxes, wire harnesses, transformers and lights (excluding light bulbs)
		X		X			Molded Refractory Panels, Glass Liners
3 years			X				Firepots, burnpots, mechanical feeders/auger assemblies
5 years	1 year	X					Vent Free Burners, Vent Free Logs
			X	X			Castings, Medallions and Baffles
6 years	3 years			X			Catalysts
7 years	3 years		X	X			Manifold tubes, HHT Chimney and Terminations
10 years	1 year	X					Burners, logs and refractory
Limited Lifetime	3 years	X	X	X			Firebox and heat exchanger, FlexBurn® System (engine, inner cover, access cover and fireback)
1 Year	None	X	X	X	X	X	All purchased replacement parts

4021-645L 10/20

Page 1 of 2

WARRANTY CONDITIONS:

- Because HHT cannot control the quality of any Products sold by unauthorized sellers, this Warranty only covers Products that are purchased through an HHT authorized dealer or distributor unless otherwise prohibited by law; a list of HHT authorized dealers is available on the HHT branded websites.
- This Warranty is only valid while the applicable Product remains at the site of original installation.
- This Warranty is only valid in the country in which the HHT authorized dealer or distributor that sold the applicable Product is authorized to sell applicable Product.
- Contact your installing distributor or dealer for Warranty service. If the installing dealer or distributor is unable to provide necessary parts, contact the nearest HHT authorized dealer or supplier. Additional service fees may apply if you are seeking Warranty service from a dealer other than the dealer from whom you originally purchased the applicable Product.
- No HHT consumer should bear cost of warranty service or costs incurred while servicing warranty claims (i.e., travel, gas, or mileage) when the service is performed within the terms of this Warranty. Check with your dealer or distributor in advance for any costs to you when arranging a warranty call. Travel and shipping charges for parts are not covered by this Warranty.

WARRANTY EXCLUSIONS:

This Warranty does not cover the following:

- Changes in surface finishes as a result of normal use. As a heating appliance, some changes in color of interior and exterior surface finishes may occur. This is not a flaw and is not covered under the Warranty.
- Damage to printed, plated, or enameled surfaces caused by fingerprints, accidents, misuse, scratches, melted items or other external sources and residues left on the plated surfaces from the use of abrasive cleaners or polishes.
- Repair or replacement of parts that are subject to normal wear and tear during the Warranty Period are not covered. These parts include: paint, wood and pellet gaskets, firebricks, grates, flame guides, batteries and the discoloration of glass.
- Minor expansion, contraction, or movement of certain parts causing noise. These conditions are normal and complaints related to this noise are not covered by this Warranty.
- Damages resulting from: (1) failure to install, operate, or maintain the applicable Product in accordance with the installation instructions, operating instructions, and listing agent identification label furnished with the applicable Product; (2) failure to install the applicable Product in accordance with local building codes; (3) shipping or improper handling; (4) improper operation, abuse, misuse, continued operation with damaged, corroded or failed components, accident, or improperly/incorrectly performed repairs; (5) environmental conditions, inadequate ventilation, negative pressure, or drafting caused by tightly sealed constructions, insufficient make-up air supply, or handling devices such as exhaust fans or forced air furnaces or other such causes; (6) use of fuels other than those specified in the operation instructions; (7) installation or use of components not supplied with the applicable Product or any other components not expressly authorized and approved by HHT; (8) modification of the appliance not expressly authorized and approved by HHT in writing; and/or (9) interruptions or fluctuations of electrical power supply to the applicable Product.
- Non-HHT venting components, hearth connections or other accessories used in conjunction with the applicable Product.
- Any part of a pre-existing fireplace system in which an insert or a decorative gas applicable Product is installed.
- HHT's obligation under this Warranty does not extend to the Product's capability to heat the desired space. Information is provided to assist the consumer and the dealer in selecting the proper Product for the application. Consideration must be given to the Product location and configuration, environmental conditions, insulation and air tightness of the structure.

This warranty is void if:

- The applicable Product has been over-fired, operated in atmospheres contaminated by chlorine, fluorine, or other damaging chemicals. Over-firing can be identified by, but not limited to, warped plates or tubes, deformation/warping of interior cast iron structure or components, rust colored cast iron, bubbling, cracking and discoloration of steel or enamel finishes.
- The applicable Product is subjected to prolonged periods of dampness or condensation.
- There is any damage to the applicable Product due to water or weather damage which is the result of, but not limited to, improper chimney or venting installation.

LIMITATIONS OF REMEDIES AND LIABILITY:

- **EXCEPT TO THE EXTENT PROVIDED BY LAW, HHT MAKES NO EXPRESS WARRANTIES OTHER THAN THE WARRANTY SPECIFIED HEREIN. The owner's exclusive remedy and HHT's sole obligation under this Warranty or in contract, tort or otherwise, shall be limited to replacement of the Component Part(s), repair of the Component Part(s), or refund of the original purchase price of the applicable Product(s), as specified above; provided, however, that (i) if HHT is unable to provide replacement of the Component Part(s) and repair of the Component Part(s) is not commercially practicable or cannot be timely made, or (ii) the customer is willing to accept a refund of the purchase price of the applicable Product(s), HHT may discharge all such obligations by refunding the purchase price of the applicable Product. In no event will HHT be liable for any incidental or consequential damages caused by defects in the applicable Product. Some States do not allow the exclusion or limitation of incidental or consequential damages, so the above limitation or exclusion may not apply to you. This Warranty gives you specific legal rights and you may also have other rights which vary from State to State. THE DURATION OF ANY IMPLIED WARRANTY IS LIMITED TO DURATION OF THE EXPRESSED WARRANTY SPECIFIED ABOVE FOR THE APPLICABLE PRODUCT. Some States do not allow limitations on how long an implied warranty lasts, so the above limitation may not apply to you.**

4021-645L 10/20

Page 2 of 2

Hearth & Home Technologies,
7571 215th Street West, Lakeville, MN 50044
www.HearthnHome.com