This Owner's Manual is provided and hosted by Appliance Factory Parts.

Appliance Factory Parts
Experts in BBQ, Humidifier, & Appliance Parts
1-800-955-7075

EMPIRE VFD26FP20LP Owner's Manual

Shop genuine replacement parts for EMPIRE VFD26FP20LP

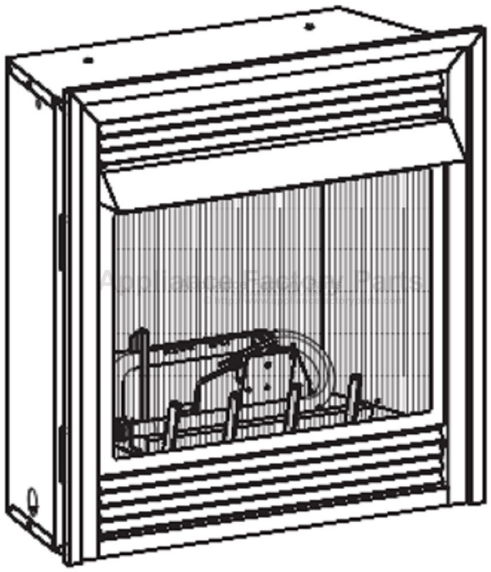

Find Your EMPIRE Fireplace Parts - Select From 642 Models

-------- Manual continues below --------

EMPIRE
COMFORT SYSTEMS
SINCE 1932

INSTALLATION INSTRUCTIONS AND OWNER'S MANUAL

VENT-FREE GAS FIREPLACES

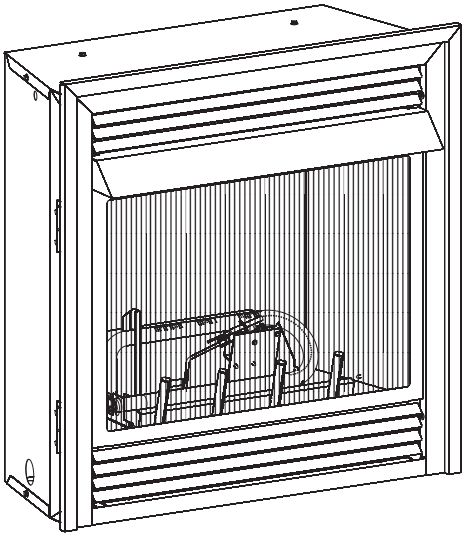

INSTALLER:

Leave this manual with the appliance.

CONSUMER:

Retain this manual for future reference.

⚠ WARNING

FIRE OR EXPLOSION HAZARD
Failure to follow safety warnings exactly could result in serious injury, death or property damage.

- **Do not store or use gasoline or other flammable vapors and liquids in the vicinity of this or any other appliance.**
- **WHAT TO DO IF YOU SMELL GAS**
  - **Do not try to light any appliance.**
  - **Do not touch any electrical switch; do not use any phone in your building.**
  - **Leave the building immediately.**
  - **Immediately call your gas supplier from a neighbor's phone. Follow the gas supplier's instructions.**
  - **If you cannot reach your gas supplier, call the fire department.**
- **Installation and service must be performed by a qualified installer, service agency or the gas supplier.**

UNVENTED GAS FIREPLACE MODELS:

VFD26FM(2,3)0(W,C)(N,P)-2
VFD26FP(2,3)0L(N,P)-2
VFD26FP70L(N,P)-1
VFD26FP30L10(N,P)-3
VFD26FP70L10(N,P)-1

DESIGN CERTIFIED ®

⚠ WARNING

If not installed, operated and maintained in accordance with the manufacturer's instructions, this product could expose you to substances in fuel or from fuel combustion which can cause death or serious illness.

This appliance may be installed in an aftermarket, permanently located, manufactured (mobile) home, where not prohibited by local codes.
This appliance is only for use with the type of gas indicated on the rating plate. This appliance is not convertible for use with other gases.

This is an unvented gas-fired heater. It uses air (oxygen) from the room in which it is installed. Provisions for adequate combustion and ventilation air must be provided. Refer to pages 9 and 10.

WATER VAPOR: A BY-PRODUCT OF UNVENTED ROOM HEATERS
Water vapor is a by-product of gas combustion. An unvented room heater produces approximately one ounce (30ml) of water for every 1,000 BTU's (.3KW's) of gas input per hour. Refer to page 8.

NATIONAL FIREPLACE INSTITUTE
NFI
CERTIFIED
www.nficertified.org

We suggest that our gas hearth products be installed and serviced by professionals who are certified in the U.S. by the National Fireplace Institute® (NFI) as NFI Gas Specialists.

TABLE OF CONTENTS

SECTION	PAGE
IMPORTANT SAFETY INFORMATION	3
SAFETY INFORMATION FOR USERS OF PROPANE GAS	4
INTRODUCTION	5
BUILT-IN FIREPLACE INSTALLATION	6
FIREPLACE DIMENSIONS	7
SPECIFICATIONS	8
WATER VAPOR: A BY-PRODUCT OF UNVENTED ROOM HEATERS	8
PROVISIONS FOR ADEQUATE COMBUSTION & VENTILATION AIR	9-10
CONNECTING THE GAS	10
GAS SUPPLY	11
CLEARANCES	12
COMBUSTIBLE MATERIAL	12
INSTALLATION OF FIREPLACE AND MANTEL	13-14
OUTER TRIM INSTRUCTIONS	15
HOOD INSTRUCTIONS	15
LOG PLACEMENT	16
PLACEMENT OF GLOWING EMBERS (ROCK WOOL)	17
OPERATION INSTRUCTIONS/FLAME APPEARANCE	18
MAINTENANCE	18
10,000 BTU MILLIVOLT LIGHTING INSTRUCTIONS	19
MILLIVOLT LIGHTING INSTRUCTIONS	20
INTERMITTENT PILOT LIGHTING INSTRUCTIONS	21
HYDRAULIC THERMOSTAT LIGHTING INSTRUCTIONS	22
PILOT FLAME CHARACTERISTICS	23-24
MAIN BURNER AND THERMOSTAT OPERATION	25
MILLIVOLT WIRING	26
MILLIVOLT TROUBLESHOOTING	27
IP ELECTRONIC SYSTEM OPERATING INSTRUCTIONS	28
IP ELECTRONIC SYSTEM WIRING DIAGRAM	29
INTERMITTENT CONTROL SYSTEM TROUBLESHOOTING	30-32
JUNCTION BOX WIRING INSTALLATION INSTRUCTIONS	33
PARTS LIST	34-35
PARTS VIEW	36
FBBX BLOWER KIT EXTENSION INSTALLATION INSTRUCTIONS	37-38
FBB4 OPTIONAL VARIABLE SPEED BLOWER	38
FPP26E OPTIONAL BRICK LINER KIT INSTALLATION INSTRUCTIONS	39
MASTER PARTS DISTRIBUTOR LIST	40
HOW TO ORDER REPAIR PARTS	40
WARRANTY	41
APPLIANCE SERVICE HISTORY	42-43

IMPORTANT SAFETY INFORMATION

THIS IS A HEATING APPLIANCE

⚠ **DANGER**: Indicates a hazardous situation which, if not avoided, will result in death or serious injury.

⚠ **WARNING**: Indicates a hazardous situation which, if not avoided, could result in death or serious injury.

⚠ **CAUTION**: Indicates a hazardous situation which, if not avoided, could result in minor or moderate injury.

NOTICE: Addresses practices not related to personal injury.

- **An unvented room heater having an input rating of more than 6,000 Btu per hour shall not be installed in a bathroom**
- **An unvented room heater having an input rating of more than 10,000 Btu per hour shall not be installed in a bedroom or bathroom.**
- **Due to high temperatures, the appliance should be located out of traffic and away from furniture and draperies.**
- **Children and adults should be alerted to the hazard of high surface temperature and should stay away to avoid burns or clothing ignition.**
- **Young children should be carefully supervised when they are in the same room with the appliance.**
- **Do not place clothing or other flammable material on or near the appliance.**
- **Avoid the use of scented air fresheners (plug in type air fresheners, etc.) while the log set is in operation. Air fresheners produce a residue in the air similar to candles and may produce a soot like substance.**
- **Avoid the use of scented or decorative candles while the log set is in operation. Candles produce a residue in the air that creates a soot like substance. Burning candles while the log set is operating magnifies the problem. It should be noted that candles, in general, produce soot. The amount of time burned and the quantity of candles burned will determine the amount of soot produced and deposited.**
- **Installation and repair should be done by a QUALIFIED SERVICE PERSON. This appliance should be inspected before use and at least annually by a professional service person. More frequent cleaning may be required due to excessive lint from carpeting, bedding materials, etc. It is imperative that control compartments, burners and circulating air passageways of the appliance be kept clean.**
- **DO NOT use this room heater if any part has been under water. Immediately call a qualified service technician to inspect the room heater and to replace any part of the control system and any gas control which has been under water.**
- **You must operate heater with fireplace screen in place.**
- **Do not place trash, logs or other articles on the log set during operation.**
- **During manufacturing, fabricating and shipping, various components of this appliance are treated with certain oils, films or bonding agents. These bonding agents are not harmful but may produce annoying smoke and smells as they are burned off during initial operation of the appliance. This is a normal temporary occurrence. A window should be opened during the initial bake out period.**
- **Correct installation of the ceramic fiber logs, proper location of the heater and annual cleaning are necessary to avoid potential problems with sooting. Sooting, resulting from improper installation or operation, can settle on surfaces outside the fireplace. See instructions for proper installation.**
- ⚠ **WARNING: Do not allow fans to blow directly into the fireplace. Avoid any drafts that alter burner flame patterns.**
- ⚠ **WARNING: Do not use a blower insert, heat exchanger insert or other accessory not approved for use with this heater.**
- ⚠ **WARNING! This fireplace needs fresh air for ventilation to run properly. This fireplace has an ODS (oxygen depletion sensor) which will shut down the heater if adequate fresh air is not available. See troubleshooting section in the instructions.**
- ⚠ **WARNING: DO NOT operate this appliance unless all components including logs, burners, and controls are in good working condition. Never operate this appliance if any log or twig is broken, or out of their intended position. Refer to the Log set placement instructions for correct log and twig positioning.**
  Replacement components are available through your local dealer as indicated in the How to Order Repair Parts section of the appliance manual.
- **Keep appliance area clear and free from combustible materials, gasoline and other flammable vapors and liquids.**
- ⚠ **WARNING: Failure to keep the primary air opening(s) of the burner(s) clean may result in sooting and property damage.**

⚠ WARNING

When used without adequate combustion and ventilation air, heater may give off CARBON MONOXIDE, an odorless, poisonous gas.

Do not install heater until all necessary provisions are made for combustion and ventilation air. Consult the written instructions provided with the heater for information concerning combustion and ventilation air. In the absence of instructions, refer to the National Fuel Gas Code, ANSI Z223.1/NFPA 54, Air for Combustion and Ventilation, or applicable local codes.

This heater is equipped with a PILOT LIGHT SAFETY SYSTEM designed to turn off the heater if not enough fresh air is available.

DO NOT TAMPER WITH PILOT LIGHT SAFETY SYSTEM!

If heater shuts off, do not relight until you provide fresh air.

If heater keeps shutting off, have it serviced. Keep burner and control compartment clean.

CARBON MONOXIDE POISONING MAY LEAD TO DEATH.

Early signs of carbon monoxide poisoning resemble the flu, with headache, dizziness and/or nausea. If you have these signs, heater may not be working properly. Get fresh air at once! Have heater serviced.

Some people — pregnant women, persons with heart or lung disease, anemia, those under the influence of alcohol , those at high altitudes — are more affected by carbon monoxide than others.

The pilot light safety system senses the depletion of oxygen at its location. If this heater is installed in a structure having a high vertical dimension, the possibility exists that the oxygen supply at the higher levels will be less than that at the heater. In this type of application, a fan to circulate the structure air will minimize this effect. The use of this fan will also improve the comfort level in the structure. When a fan is used to circulate air, it should be located so that the air flow is not directed at the burner.

SAFETY INFORMATION FOR USERS OF PROPANE GAS

Propane is a flammable gas which can cause fires and explosions. In its natural state, propane is odorless and colorless. You may not know all the following safety precautions which can protect both you and your family from an accident. Read them carefully now, then review them point by point with the members of your household. Someday when there may not be a minute to lose, everyone's safety will depend on knowing exactly what to do. If, after reading the following information, you feel you still need more information, please contact your gas supplier.

PROPANE GAS WARNING ODOR

If a gas leak happens, you should be able to smell the gas because of the odorant put in the Propane Gas. That's your signal to go into immediate action!

- Do not operate electric switches, light matches, use your phone. Do not do anything that could ignite the gas.
- Get everyone out of the building, vehicle, trailer, or area. Do that IMMEDIATELY.
- Close all gas tank or cylinder supply valves.
- Propane Gas is heavier than air and may settle in low areas such as basements. When you have reason to suspect a gas leak, keep out of basements and other low areas. Stay out until firefighters declare them to be safe.
- Use your neighbor's phone and call a trained Propane Gas service person and the fire department. Even though you may not continue to smell gas, do not turn on the gas again. Do not re-enter the building, vehicle, trailer, or area.
- Finally, let the service man and firefighters check for escaped gas. Have them air out the area before you return. Properly trained Propane Gas service people should repair the leak, then check and relight the gas appliance for you.

NO ODOR DETECTED - ODOR FADE

Some people cannot smell well. Some people cannot smell the odor of the chemical put into the gas. You must find out if you can smell the odorant in propane. Smoking can decrease your ability to smell. Being around an odor for a time can affect your sensitivity or ability to detect that odor. Sometimes other odors in the area mask the gas odor. People may not smell the gas odor or their minds are on something else. Thinking about smelling a gas odor can make it easier to smell.

The odorant in Propane Gas is colorless, and it can fade under some circumstances. For example, if there is an underground leak, the movement of the gas through soil can filter the odorant. Odorants in Propane Gas also are subject to oxidation. This fading can occur if there is rust inside the storage tank or in iron gas pipes.

The odorant in escaped gas can adsorb or absorb onto or into walls, masonry and other materials and fabrics in a room. That will take some of the odorant out of the gas, reducing its odor intensity.

Propane Gas may stratify in a closed area, and the odor intensity could vary at different levels. Since it is heavier than air, there may be more odor at lower levels. Always be sensitive to the slightest gas odor. If you detect any odor, treat it as a serious leak. Immediately go into action as instructed earlier.

SOME POINTS TO REMEMBER

- **Learn to recognize the odor of Propane Gas.** Your local Propane Gas Dealer can give you a "Scratch and Sniff" pamphlet. Use it to find out what the propane odor smells like. If you suspect that your Propane Gas has a weak or abnormal odor, call your Propane Gas Dealer.
- If you are not qualified, do not light pilot lights, perform service, or make adjustments to appliances on the Propane Gas system. If you are qualified, consciously think about the odor of Propane Gas prior to and while lighting pilot lights or performing service or making adjustments.
- Sometimes a basement or a closed-up house has a musty smell that can cover up the Propane Gas odor. Do not try to light pilot lights, perform service, or make adjustments in an area where the conditions are such that you may not detect the odor if there has been a leak of Propane Gas.
- Odor fade, due to oxidation by rust or adsorption on walls of new cylinders and tanks, is possible. Therefore, people should be particularly alert and careful when new tanks or cylinders are placed in service. Odor fade can occur in new tanks, or reinstalled old tanks, if they are filled and allowed to set too long before refilling. Cylinders and tanks which have been out of service for a time may develop internal rust which will cause odor fade. If such conditions are suspected to exist, a periodic sniff test of the gas is advisable. **If you have any question about the gas odor, call your Propane Gas Dealer. A periodic sniff test of the Propane Gas is a good safety measure under any condition.**
- If, at any time, you do not smell the Propane Gas odorant and you think you should, assume you have a leak. Then take the same immediate action recommended above for the occasion when you do detect the odorized Propane Gas.
- If you experience a complete "gas out," (the container is under no vapor pressure), turn the tank valve off immediately. If the container valve is left on, the container may draw in some air through openings such as pilot light orifices. If this occurs, some new internal rusting could occur. If the valve is left open, then treat the container as a new tank. Always be sure your container is under vapor pressure by turning it off at the container before it goes completely empty or having it refilled before it is completely empty.

INTRODUCTION

Instructions to Installer

1. Installer must leave instruction manual with owner after installation.
2. Installer must have owner fill out and mail warranty card supplied with unvented room heater.
3. Installer should show owner how to start and operate unvented room heater.

Always consult your local Building Department regarding regulations, codes or ordinances which apply to the installation of an unvented room heater.

This appliance may be installed in an aftermarket* manufactured (mobile) home, where not prohibited by state or local codes.

*Aftermarket: Completion of sale, not for purpose of resale, from the manufacturer.

Well Head Gas Installations

Some natural gas utilities use “well head” gas. This may affect the Btu output of the unit and promote sooting. Units shall not be converted to use well head gas.

This appliance is only for use with the type of gas indicated on the rating plate. This appliance is not convertible for use with other gases.

⚠ WARNING

Any change to this heater or its controls can be dangerous. Improper installation or use of the heater can cause serious injury or death from fire, burns, explosion or carbon monoxide poisoning.

Operation

This unvented fireplace requires no outside venting. State and local codes in some areas prohibit the use of unvented fireplace.

VFD26F(M,P)3 Series, Millivolt controls

The valve regulator controls the burner pressure which should be checked at the pressure test point. Turn captured screw counter clockwise 2 or 3 turns and then place tubing to pressure gauge over test point (Use test point “A” closest to control knob). After taking pressure reading, be sure and turn captured screw clockwise firmly to re-seal. Do not over torque. Check for gas leaks.

Millivolt System

When you ignite the pilot, the thermocouple produces millivolts (electrical current) which energizes the magnet in the gas valve. After 30 seconds to 1 minute time period you can release the gas control knob and the pilot will stay ON. Allow your pilot flame to operate an additional one to two minutes before you turn the gas control knob from the PILOT position to the ON position. This time period allows the millivolts (electrical current) to build-up to a sufficient level allowing the gas control to operate properly.

⚠ WARNING

This appliance is equipped for natural gas or propane gas. Field conversion is not permitted.

General Information

This series is design certified in accordance with American National Standard Z21.11.2 by the Canadian Standards Association as an Unvented Room Heater and should be installed according to these instructions.

Any alteration of the original design, installed other than as shown in these instructions or use with a type of gas not shown on the rating plate is the responsibility of the person and company making the change.

Important

All correspondence should refer to complete Model Number, Serial Number and type of gas.

Attention: During initial use of ceramic log you will detect an odor as the ceramic log cures.

Notice: During initial firing, its paint will bake out causing smoke. To prevent triggering of smoke alarms, ventilate the room in which the unit is installed.

Installation on Rugs and Tile

If this appliance is installed directly on carpeting, tile or other combustible material other than wood flooring the appliance shall be installed on a metal or wood panel extending the full width and depth of the appliance.

The base referred to above does not mean the fire-proof base as used on wood stoves. The protection is for rugs that are extremely thick and light colored tile.

Solid-fuels shall not be burned in a masonry or *UL 127* factory-built fireplace in which an unvented room heater is installed.

Qualified Installing Agency

Installation and replacement of gas piping, gas utilization equipment or accessories and repair and servicing of equipment shall be performed only by a qualified agency. The term "qualified agency" means any individual, firm, corporation or company which either in person or through a representative is engaged in and is responsible for (a) the installation or replacement of gas piping or (b) the connection, installation, repair or servicing of equipment, who is experienced in such work, familiar with all precautions required and has complied with all the requirements of the authority having jurisdiction.

Commonwealth of Massachusetts: The installation must be made by a licensed plumber or gas fitter in the Commonwealth of Massachusetts.

Sellers of unvented propane or natural gas-fired supplemental room heaters shall provide to each purchaser a copy of 527 CMR 30 upon sale of the unit.

In the Commonwealth of Massachusetts, unvented propane and natural gas-fired space heaters shall be prohibited in bedrooms and bathrooms.

The installation must conform with local codes or, in the absence of local codes, with the *National Fuel Gas Code, ANSI Z223.1.**

**Available from the American National Standards Institute, Inc. 1430 Broadway, New York, N.Y. 10018.*

High Altitudes

For altitudes/elevations above 2,000 feet (610m), ratings should be reduced at the rate of 4 percent for each 1,000 feet (305m) above sea level. Contact the manufacturer or your gas company before changing spud/orifice size.

⚠ WARNING

Failure to keep the primary air opening(s) of the burner(s) clean may result in sooting and property damage.

BUILT-IN FIREPLACE INSTALLATION

Built-In Fireplace Installation

Built-in installation of this fireplace involves installing the fireplace into a framed-in enclosure. This makes the front of the fireplace flush with a wall. If installing a mantel above the fireplace, you must follow the clearances shown in Figure 9. Follow the instructions below to install the fireplace in this manner.

Frame in rough opening. Use dimensions show in Figure 1 for a conventional rough opening. Use dimensions shown in Figure 2 for corner rough opening. Be sure to provide gas line for fireplace and electrical power for optional blower assembly.

1. Attach two nailing flanges to firebox sides with two 10 x 1/2" screws for each nailing flange.
2. Gas line connections must be made at this time. When facing the appliance, the gas supply will enter on the right-hand side. See "Gas Supply" page 11.
3. Insert fireplace into enclosure.
4. Attach nailing flanges to framing with a screw or nail.
5. Finished wall surface will be flush to the leading edge of fireplace top and sides.
6. Installation of built-in fireplace is completed.

Rough Opening for Installing in Wall

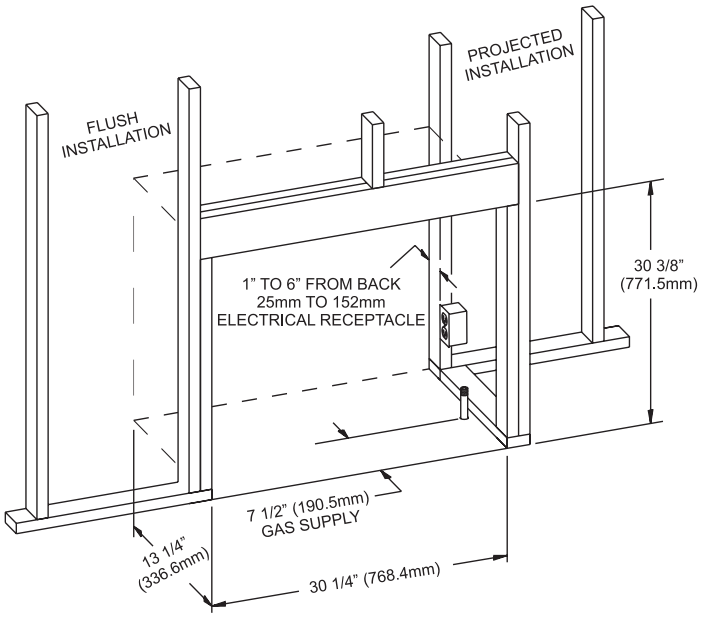

Figure 1

Rough Opening for Installing in Corner

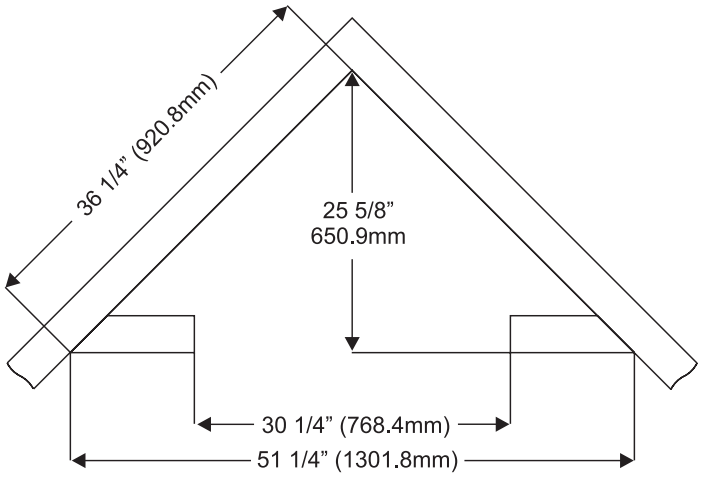

Figure 2

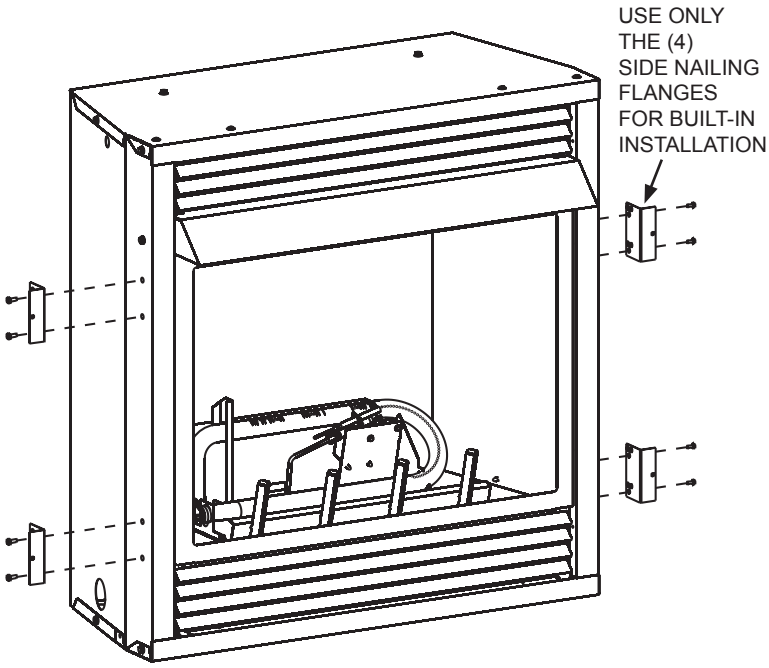

Figure 3

FIREPLACE DIMENSIONS

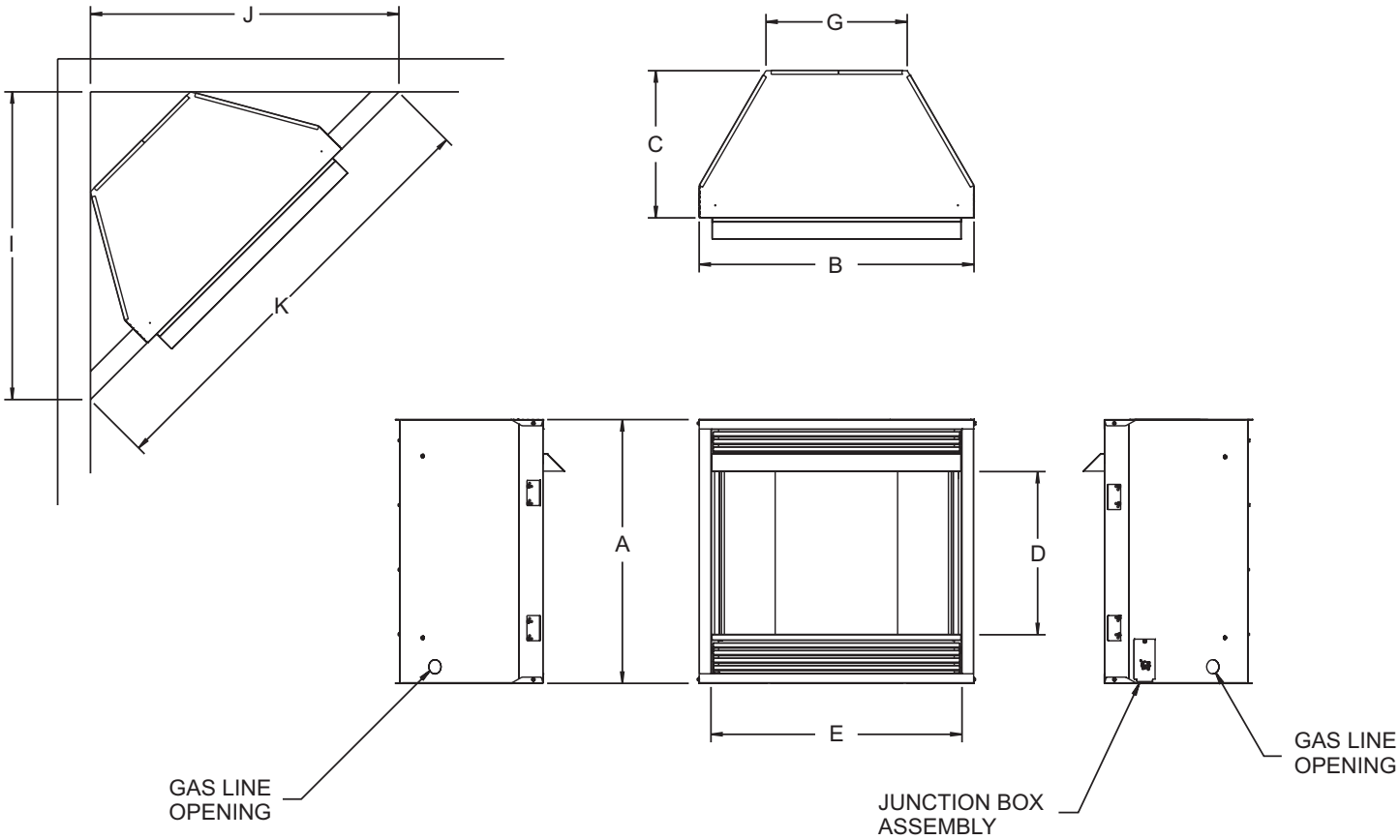

VFD26 SERIES DIMENSIONS	
Index Letter	**Dimension**
A	30 1/4" 768mm
B	30" 762mm
C	13 1/8" 333mm
D	18 1/8" 460mm
E	26" 660mm
G	25" 635mm
I	36 1/4" 921mm
J	36 1/4" 921mm
K	51 1/4" 1302mm

Figure 4

SPECIFICATIONS

MODEL	VFD26F(M,P)(3,7)	VFD26F(M,P)2	VFD26FP(3,7)0L10
Input Maximum	20,000	20,000	10,000
Minimum	14,000	14,000	N/A
NATURAL			
Orifice	2.10 mm (P-288)	#49 (.073") P-265	#53 (.0595") P-214
Air Shutter Opening	1/8"	1/8"	1/8"
PROPANE			
Orifice	#55 (.052") P-182	#55 (.052") P-182	#64 (.036") P-193
Air Shutter Opening	1/4"	1/4"	1/4"
FIREPLACE DIMENSIONS			
Height	30 1/4"	30 1/4"	30 1/4"
Depth	13 1/8"	13 1/8"	13 1/8"
Front Width	30"	30"	30"
Rear Width	25"	25"	25"
Gas Inlet	3/8"	3/8"	3/8"

ACCESSORIES	
Model	**Description**
FBBX	Blower Extension Kit (MUST order FBB4)
FBB4	Automatic Blower (MUST order FBBX)
VPS26HP	Bottom Trim Kit
VP2H26HP	Hammered Pewter Hood Kit
VPF26HP	Hammered Pewter Trim Kit
FPP26E	Brick Liner
VPL26HP	Hammered Pewter Slat Louver
ACCESSORIES FOR MILLIVOLT VFD26F(M,P)(3,7) ONLY	
FRBC	Battery Operated Remote Control
FRBTC	Battery Operated Remote Control w/Thermostat
FREC	Electric Remote Control
FWS-1	Wall Switch
TMV	Wall Thermostat, Millivolt - Reed Switch
TRW	Wireless Remote Wall Thermostat

WATER VAPOR: A BY-PRODUCT OF UNVENTED ROOM HEATERS

Water vapor is a by-product of gas combustion. An unvented room heater produces approximately one ounce (30ml) of water for every 1,000 BTU's (.3KW's) of gas input per hour. .

Unvented room heaters are recommended as supplemental heat (a room) rather than a primary heat source (an entire house). In most supplemental heat applications, the water vapor does not create a problem. In most applications, the water vapor enhances the low humidity atmosphere experienced during cold weather.

The following steps will help insure that water vapor does not become a problem.

1. Be sure the heater is sized properly for the application, including ample combustion air and circulation air.
2. If high humidity is experienced, a dehumidifier may be used to help lower the water vapor content of the air.
3. Do not use an unvented room heater as the primary heat source.

PROVISIONS FOR ADEQUATE COMBUSTION & VENTILATION AIR

This heater shall not be installed in a confined space or unusually tight construction unless provisions are provided for adequate combustion and ventilation air.

A confined space is an area with volume less than 50 cubic feet per 1,000 Btuh of the combined input rates of all appliances drawing combustion air from that space. Small areas such as equipment rooms are confined spaces. Furnaces installed in a confined space which supply heated air to areas outside the space must draw return air from outside the space through tightly sealed return air ducts. A confined space must have 2 openings into the space for combustion air. One opening must be within 12 inches of the ceiling and the other must be within 12 inches of the floor. The required sizing of these openings is determined by whether inside or outside air is used to support combustion, the method by which the air is brought to the space (vertical or horizontal duct) and by the total input rate of all appliances in the space.

Unusually Tight Construction

The air that leaks around doors and windows may provide enough fresh air for combustion and ventilation. However, in buildings of unusually tight construction, you must provide additional fresh air.

Unusually tight construction is defined as construction where:

a. Walls and ceilings exposed to the outside atmosphere have a continuous water vapor retarder with a rating of one perm or less with openings gasketed or sealed, and
b. Weatherstripping has been added on openable windows and doors, and
c. Caulking or sealants are applied to areas such as joints around window and door frames, between sole plates and floors, between wall-ceiling joints, between wall panels, at penetrations for plumbing, electrical, and gas lines, and at other openings.

If your home meets all of the three criteria above, you must provide additional fresh air. See **"Ventilation Air From Outdoors,"** page 10.

Determining if You Have a Confined or Unconfined Space

Use this worksheet to determine if you have a confined or unconfined space.

Space: Includes the room in which you will install heater plus any adjoining rooms with doorless passageways or ventilation grills between the rooms.

1. Determine the volume of the space (length x width x height).
   Length x Width x Height = _____ cu. ft. (volume of space)
   Example: Space size 16 ft. (length) x 10 ft. (width) x 8 ft. (ceiling height) = 1,280 cu. ft. (volume of space)
   If additional ventilation to adjoining room is supplied with grills or openings, add the volume of these rooms to the total volume of the space.
2. Divide the space volume by 50 cubic feet to determine the maximum BTU/Hr the space can support.
   _____ (volume of space) ÷ 50 cu. ft. = (maximum BTU/Hr the space can support)
   Example: 1,280 cu. ft. (volume of space) ÷ 50 cu. ft. = 25.6 or 25,600 (maximum BTU/Hr the space can support)
3. Add the BTU/Hr of all fuel burning appliances in the space.

Vent-free heater		_____	BTU/Hr
Gas water heater		_____	BTU/Hr
Gas furnace		_____	BTU/Hr
Vented gas heater		_____	BTU/Hr
Gas fireplace logs		_____	BTU/Hr
Other gas appliances*	+	_____	BTU/Hr
Total	=	_____	BTU/Hr

Example: Vented gas heater		20,000	BTU/Hr
Vent-free heater	+	18,000	BTU/Hr
Total	=	38,000	BTU/Hr

*Do not include direct-vent gas appliances. Direct vent draws combustion air from the outdoors and vents to the outdoors.

4. Compare the maximum BTU/Hr the space can support with the actual amount of BTU/Hr used.
   _____ BTU/Hr (maximum the space can support)
   _____ BTU/Hr (actual amount of BTU/Hr used)
   Example:
   25,600 BTU/Hr (maximum the space can support)
   38,000 BTU/Hr (actual amount of BTU/Hr used)

⚠ WARNING

If the area in which the heater may be operated is smaller than that defined as an unconfined space or if the building is of unusually tight construction, provide adequate combustion and ventilation air by one of the methods described in the National Fuel Gas Code, ANSI Z223.1/NFPA 54, Air for Combustion and Ventilation, or applicable local codes.

The space in the above example is a confined space because the actual BTU/Hr used is more than the maximum BTU/HR the space can support. You must provide additional fresh air. Your options are as follows:

A. Rework worksheet, adding the space of an adjoining room. If the extra space provides an unconfined space, remove door to adjoining room or add ventilation grills between rooms. See **Ventilation Air From Inside Building.**
B. Vent room directly to the outdoors. See **Ventilation Air From Outdoors.**
C. Install a lower BTU/Hr heater, if lower BTU/Hr size makes room unconfined.

If the actual BTU/Hr used is less than the maximum BTU/Hr the space can support, the space is an unconfined space. You will need no additional fresh air ventilation.

⚠ WARNING

You must provide additional ventilation air in a confined space.

PROVISIONS FOR ADEQUATE COMBUSTION & VENTILATION AIR

VENTILATION AIR

Ventilation Air From Inside Building

This fresh air would come from an adjoining unconfined space. When ventilating to an adjoining unconfined space, you must provide two permanent openings: one within 12" of the ceiling and one within 12" of the floor on the wall connecting the two spaces (see options 1 and 2, Figure 5). You can also remove door into adjoining room (see option 3, Figure 5). Each ventilation grill or opening shall have a minimum free area of one square inch per 1,000 BTU/HR of the total input rating of the gas equipment in the confined space.

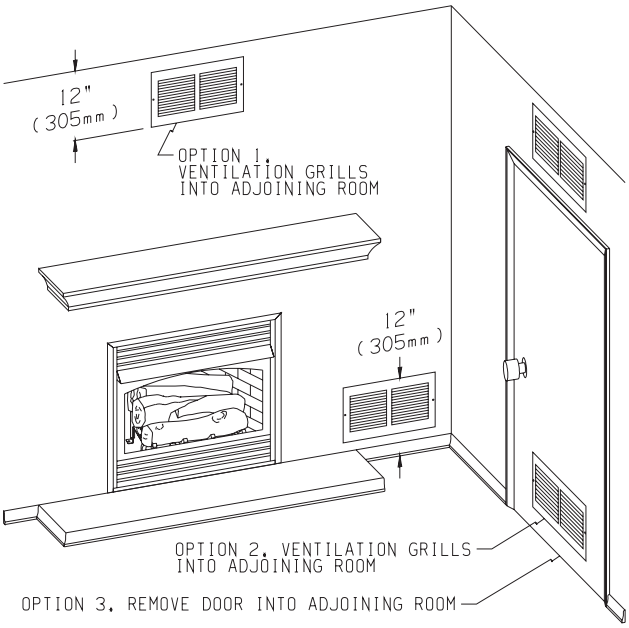

Figure 5

⚠ WARNING

Rework worksheet, adding the space of the adjoining unconfined space. The combined spaces must have enough fresh air to supply all appliances in both spaces.

Ventilation Air From Outdoors

Provide extra fresh air by using ventilation grills or ducts. You must provide two permanent openings: one within 12" of the ceiling and one with 12" of the floor. Connect these items directly to the outdoors or spaces open to the outdoors. These spaces include attics and crawl spaces. In most cases for direct communication with the outdoors or direct communication through a vertical duct a free area opening of one square inch per 4,000 BTU/HR of heater input rating for each grill. If a horizontal duct is used, a grill free area or duct opening shall have a free area opening of one square inch per 2,000 BTU/HR for each grill. Follow the *National Fuel Code, ANSI Z223.1/NFPA 54, Air for Combustion and Ventilation, or applicable local codes,* for required size of ventilation grills or ducts.

IMPORTANT: Do not provide openings for inlet or outlet air into attic if attic has a thermostat-controlled power vent. Heated air entering the attic will activate the power vent.

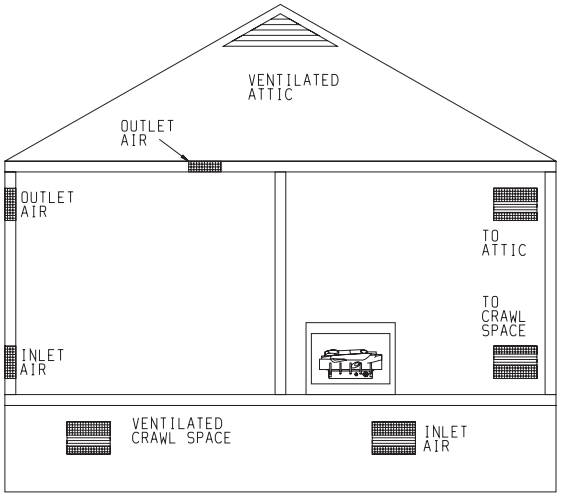

Figure 6

CONNECTING THE GAS

The inlet connection is located on the right side of the gas valve. Attach gas inlet line to gas valve.

If installing the an Optional Blower, it must be installed before connecting the gas line.

GAS SUPPLY

Check all local codes for requirements, especially for the size and type of gas supply line required.

RECOMMENDED GAS PIPE DIAMETER				
Pipe Length	Schedule 40 Pipe Inside Diameter		Tubing, Type L Outside Diameter	
	Natural	Propane	Natural	Propane
0-10 feet 0-3 meters	1/2” 12.7mm	3/8” 9.5mm	1/2” 12.7mm	3/8” 9.5mm
10-40 feet 4-12 meters	1/2” 12.7mm	1/2” 12.7mm	5/8” 15.9mm	1/2” 12.7mm
40-100 feet 13-30 meters	1/2” 12.7mm	1/2” 12.7mm	3/4” 19mm	1/2” 12.7mm
100-150 feet 31-46 meters	3/4” 19mm	1/2” 12.7mm	7/8” 22.2mm	3/4” 19mm

NOTICE: Never use plastic pipe. Check to confirm whether your local codes allow copper tubing or galvanized.

NOTICE: Since some municipalities have additional local codes, it is always best to consult your local authority and installation code.

Installing a New Main Gas Shut-Off

Each appliance should have its own manual gas shut-off.
A manual main gas shut-off should be located in the vicinity of the unit. Where none exists, or where its size or location is not adequate, contact your local authorized installer for installation or relocation.

Compounds used on threaded joints of gas piping shall be resistant to the action of liquefied petroleum gases. The gas lines must be checked for leaks by the installer. This should be done with a soap solution watching for bubbles on all exposed connections, and if unexposed, a pressure test should be made.

⚠ WARNING

Never use an exposed flame to check for leaks. Appliance must be disconnected from piping at inlet of control valve and pipe capped or plugged for pressure test. Never pressure test with appliance connected; control valve will sustain damage!

A gas valve and ground joint union should be installed in the gas line upstream of the gas control to aid in servicing. It is required by the National Fuel Gas Code that a drip line be installed near the gas inlet. This should consist of a vertical length of pipe tee connected into the gas line that is capped on the bottom in which condensation and foreign particles may collect.

The use of the following gas connectors is recommended:
— ANS Z21.24 Appliance Connectors of Corrugated Metal Tubing and Fittings
— ANS Z21.45 Assembled Flexible Appliance Connectors of Other Than All-Metal Construction

The above connectors may be used if acceptable by the authority having jurisdiction. The Commonwealth of Massachusetts requires that a flexible appliance connector cannot exceed three feet in length.

Pressure Testing of the Gas Supply System

1. To check the inlet pressure to the gas valve, a 1/8" (3mm) N.P.T. plugged tapping, accessible for test gauge connection, must be placed immediately upstream of the gas supply connection to the appliance.
2. The appliance and its individual shut-off valve must be disconnected from the gas supply piping system during any pressure testing of that system at test pressures in excess of 1/2 psig (3.5 kPa).
3. The appliance must be isolated from the gas supply piping system by closing its individual manual shut-off valve during any pressure testing of the gas supply piping system at test pressures equal to or less than 1/2 psig (3.5 kPa).

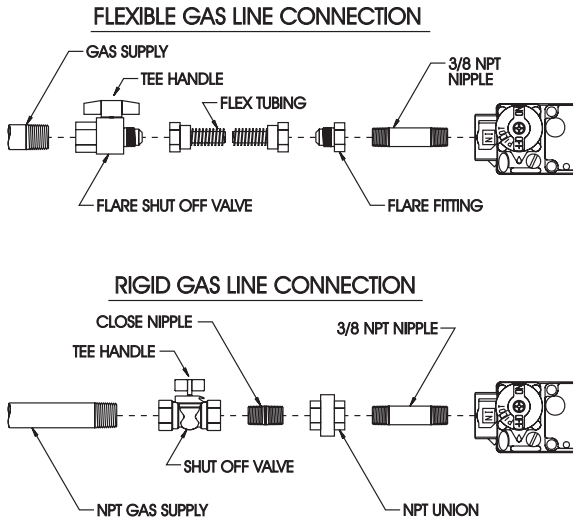

Figure 7

⚠ WARNING

If one of the above procedures results in pressures in excess of 1/2 psig (14" w.c.) (3.5 kPa) on the appliance gas valve, it will result in a hazardous condition.

Checking Manifold Pressure

3 Series Millivolt Natural Gas will have a manifold pressure of approximately 3.5" w.c. (.871kPa) for maximum input or 1.7" w.c. (.423kPa) for minimum input at the pressure regulator outlet with the inlet pressure to the pressure regulator from a minimum of 5.0" w.c. (1.120kPa) for the purpose of input adjustment to a maximum of 10.5" w.c. (2.614kPa).

2 Series Hydraulic Thermostat Natural Gas will have a manifold pressure of approximately 6.0" w.c. (1.49kPa) at the pressure regulator outlet with the inlet pressure to the pressure regulator from a minimum of 7.0" w.c. (1.74kPa) for the purpose of input adjustment to a maximum of 10.5" w.c. (2.615kPa).

3 Series Millivolt Propane Gas will have a manifold pressure approximately 10.0"w.c. (2.49kPa) for maximum input or 6.3"w.c. (1.568kPa) for minimum input at the pressure regulator outlet with the inlet pressure to the pressure regulator from a minimum of 11.0"w.c. (2.739kPa) for the purpose of input adjustment to a maximum of 13.0"w.c. (3.237kPa).

2 Series Hydraulic Thermostat Propane Gas will have a manifold pressure approximately 10.0"w.c. (2.49kPa) at the pressure regulator outlet with the inlet pressure to the pressure regulator from a minimum of 11.0"w.c. (2.739kPa) for the purpose of input adjustment to a maximum of 13.0"w.c. (3.237kPa).

CLEARANCES

Minimum Wall and Ceiling Clearances

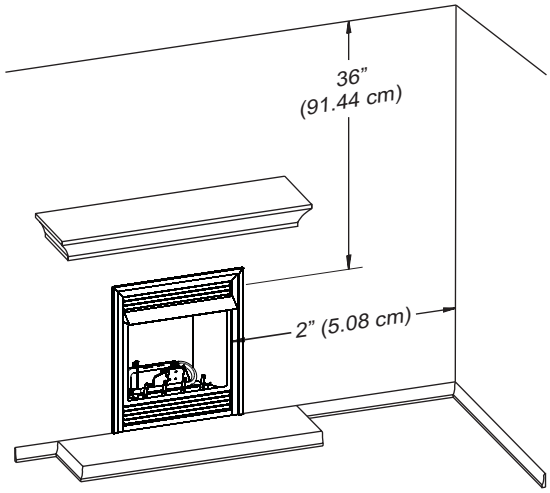

Figure 8

This fireplace can be installed with zero (0") clearance to combustible material.
When facing the front of the appliance the minimum clearances to combustible construction (material) are the following:

1. Clearances from the right side or left side of the fireplace opening to any combustible wall or material should not be less than 2 inches.
2. Clearances from the top of the fireplace opening to the ceiling should not be less than 36 inches.

Mantel Clearances for Built-in Installation

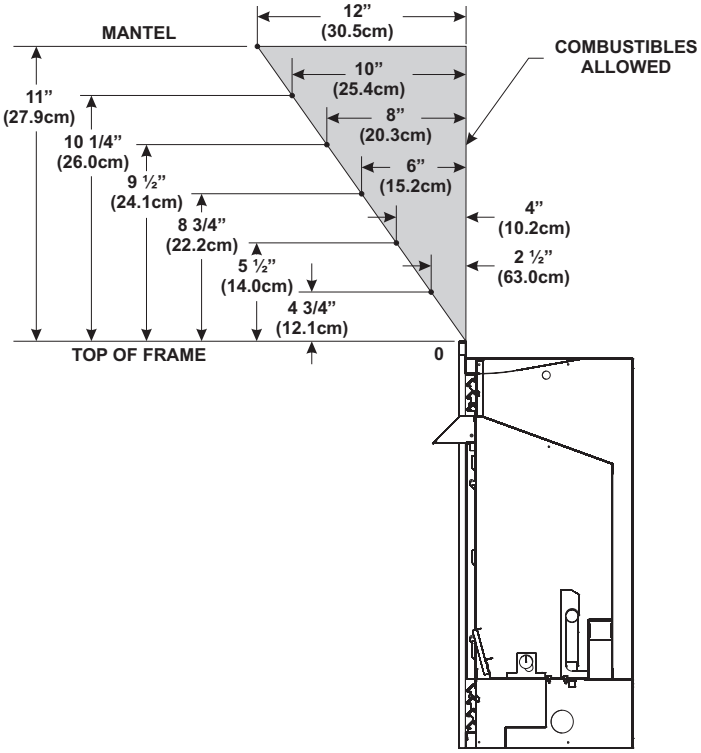

Figure 9

COMBUSTIBLE MATERIAL

Do not attach combustible material to the mantel of your fireplace. This is a fire hazard.

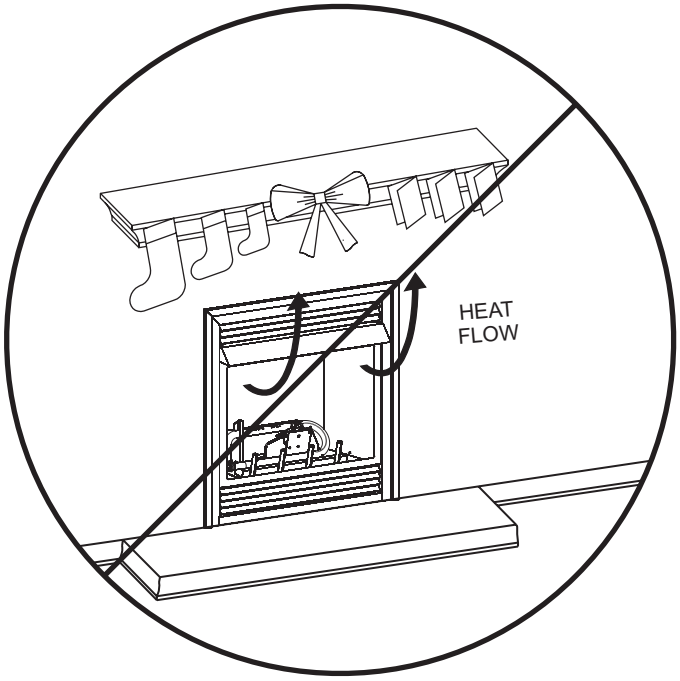

Figure 10

No greeting cards, stockings or ornamentation of any type should be placed on or attached to the fireplace. This is a heating appliance. The flow of heat can ignite combustibles.

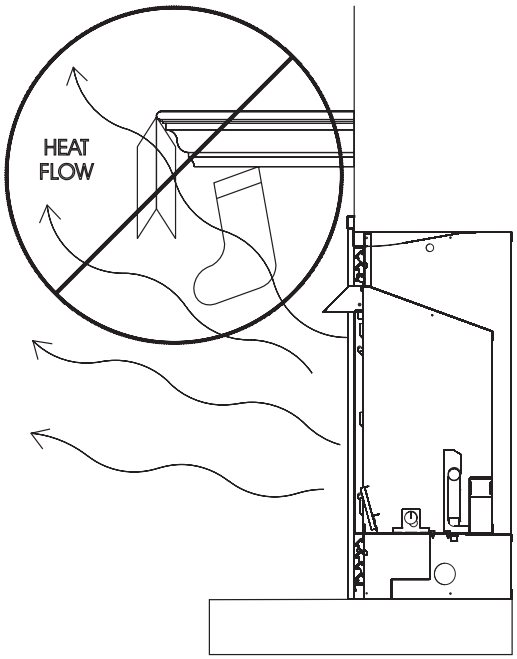

Figure 11

INSTALLATION OF FIREPLACE AND MANTEL

1. Remove fireplace from carton.
2. Remove mantel top and front base from mantel assembly.

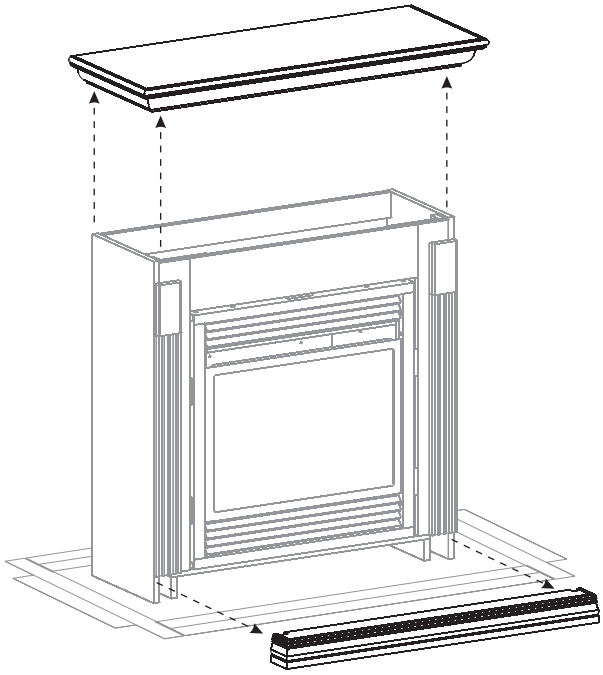

3. Remove screw attached to fireplace top and through "L Bracket" attached to back of breast board.

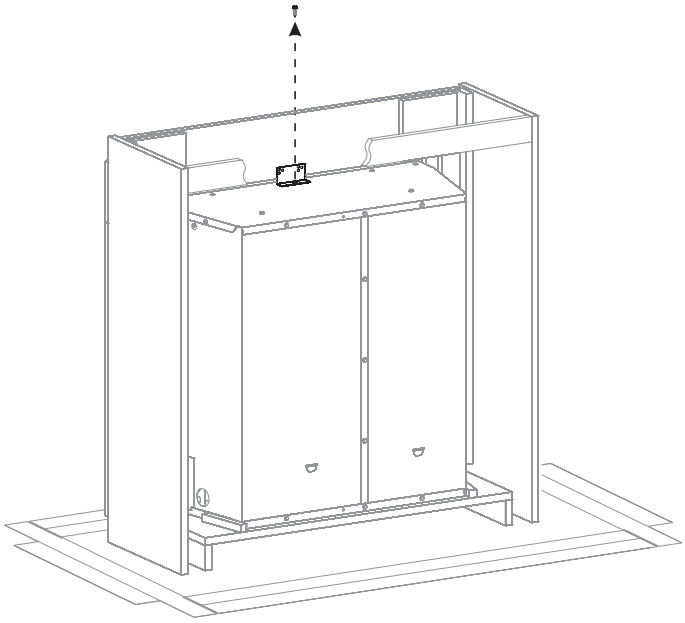

4. Remove mantel assembly from fireplace.
5. Remove shrink wrap and logs from fireplace.
6. Place back base and fireplace in desired location.
7. Connect gas line and electrical wiring at this time in accordance with local codes.

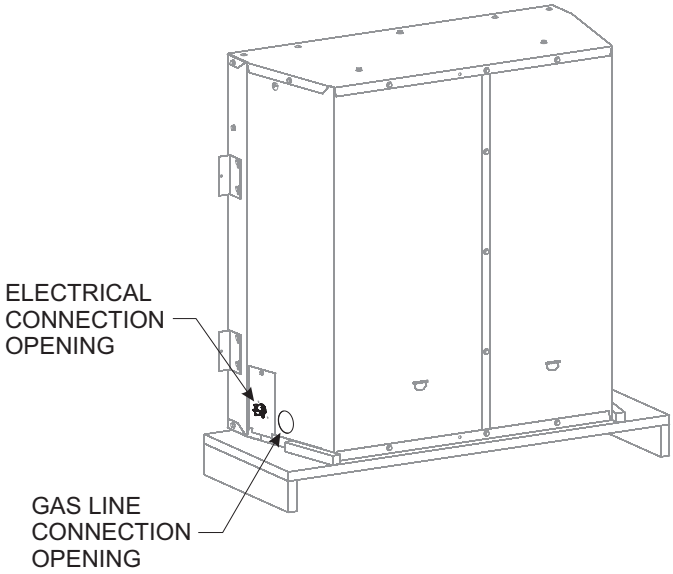

8. Place mantel assembly around fireplace and center. Replace the screw removed in step 3 to secure fireplace to mantel assembly.

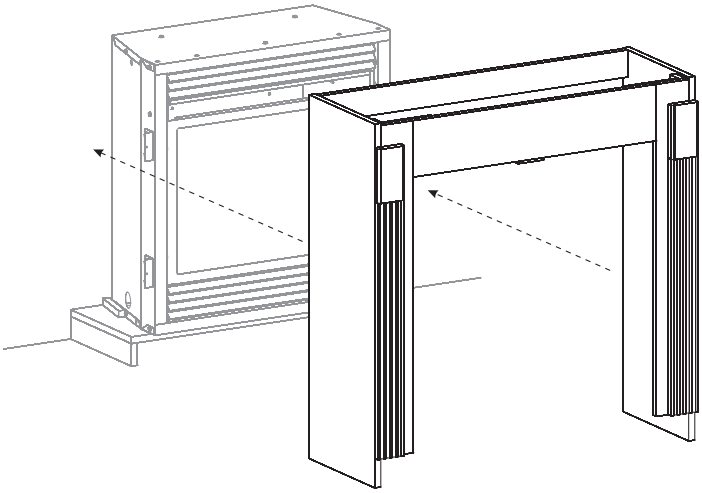

INSTALLATION OF FIREPLACE AND MANTEL

9. Attach mantel assembly to studs in the wall through the "back brace" using two 3" drywall screws provided.

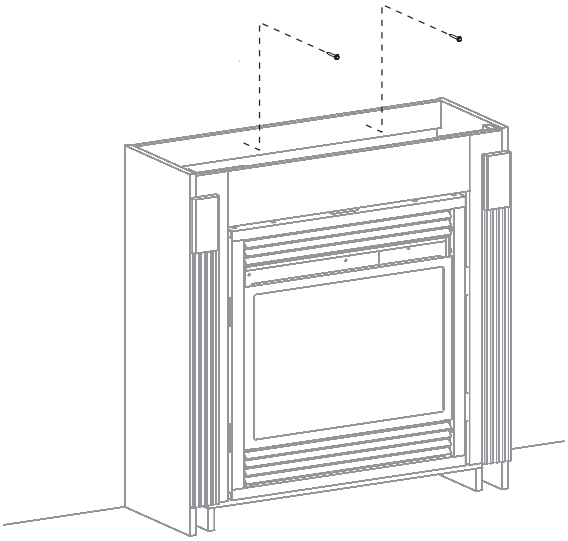

10. Slide front base under front of mantel assembly.

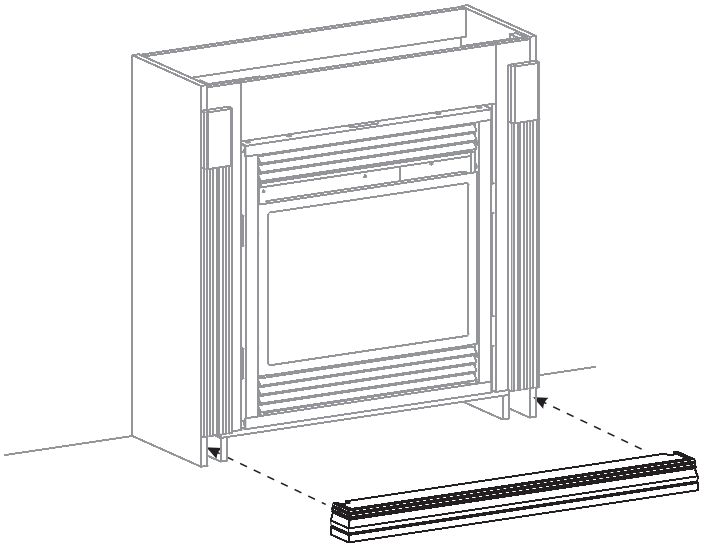

11. Place mantel top onto mantel assembly.

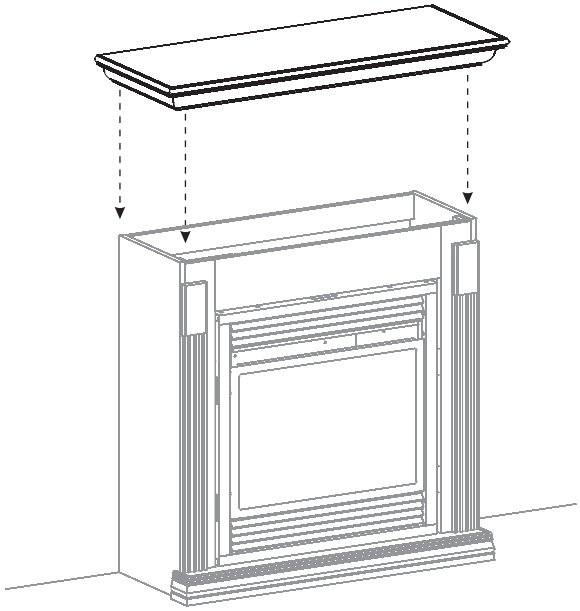

12. Install outer trim. See Page 15.
13. Install fiber logs per the Log Placement Instructions. See Page 16.
14. Install hood. See Page 15.

OUTER TRIM INSTRUCTIONS

1. Remove upper louver, grasp louver at left and right ends; lift and pull forward.
2. Open bottom louver, then lift to remove.
3. Install the right frame and left frame to the fireplace. Align clearance holes in frame with screw holes in fireplace. Attach right frame and left frame to fireplace. Use two 8 x 1/2” Phillips screws for each frame.
4. Insert top frame into interior, top of fireplace. Align clearance holes in top frame with screw holes in fireplace. Attach top frame to fireplace. Use two 8 x 1/2” Phillips screws for top frame.
5. Replace bottom louver.
6. Replace top louver.

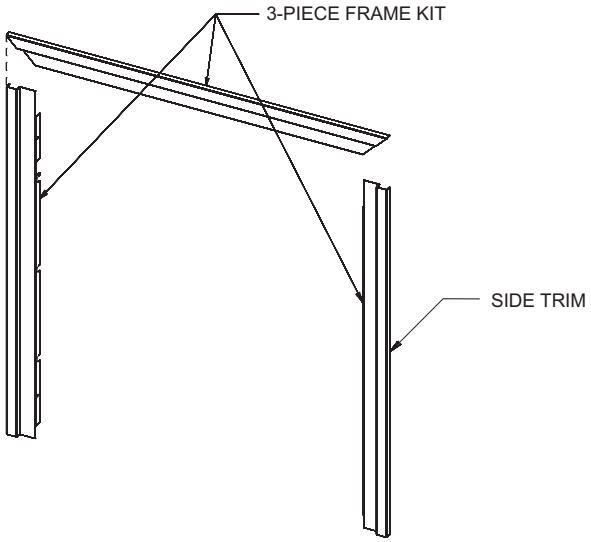

HOOD INSTRUCTIONS

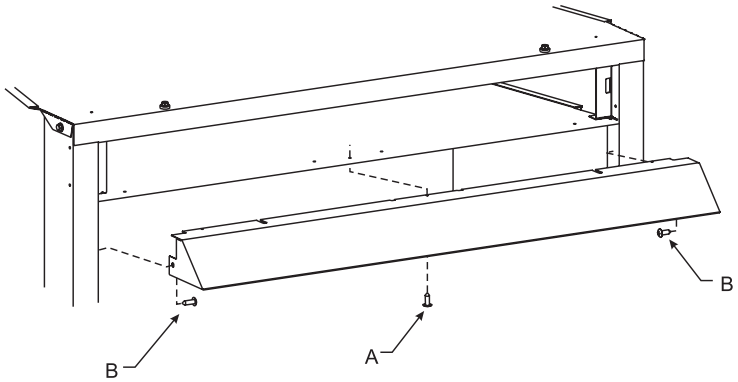

1. Remove upper louver, grasp louver at left and right ends; lift and pull forward.
2. Remove screen frame assembly.
3. Outer trim must be installed before installing hood.
4. Place the top hood flange on top of the firebox, then install one screw (A) at the center on vent free fireplace through the firebox top from below.
5. Install one screw (B) at each end of the hood as shown.
6. Replace upper louver.
7. Replace screen frame assembly.

⚠ CAUTION
A hood must be installed prior to operation of appliance.

LOG PLACEMENT

1. Place front logs (#1 and #2) between front grate flange and main burner. Align notches on front logs with locator tabs in base.
2. Place middle log (#3) between front and rear loop of burner. ***NOTICE***: Do not place log on top of pilot assembly.
3. Place rear log (#4) on rear log shelf. Bottom flange of log must be placed between the log shelf and burner tube.
4. **This step is optional for VFD26FP3L10 log sets.** Place front twig (#5) onto (#1) log and flat area on (#3) log. The bottom of the front twig is to be placed behind the grate tang that is second from the left.

Attention: Do not use Figures 12 and 13 to order logs. Refer to Pages 34 to 35, Parts list and Page 36, Parts View to order logs.

Refer to Figure 12 for the following warning.

⚠ CAUTION

Failure to position the parts in accordance with this diagram or failure to use only parts specifically approved with this heater may result in property damage or personal injury.

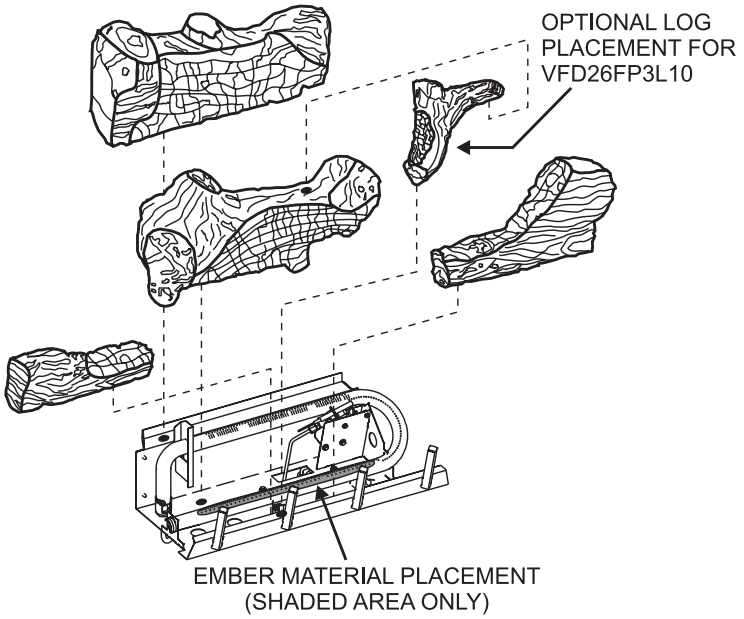

Figure 12

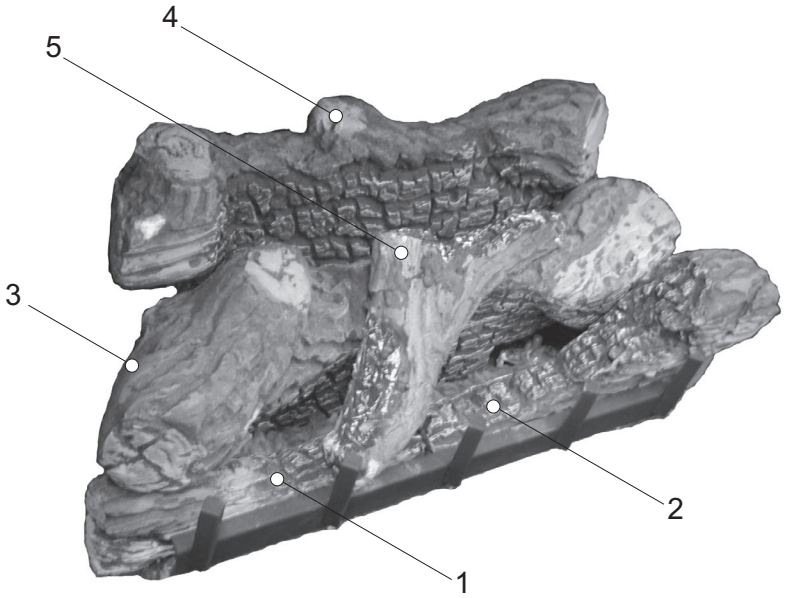

Figure 13

PLACEMENT OF GLOWING EMBERS (ROCK WOOL)

Provided with the log set is a small bag of glowing embers (rock wool) to be placed between logs on the flat metal surface of the burner.

Placement of the embers (rock wool) is very individual and light coverage of the areas indicated will provide your best effects. We recommend separation of the rock wool by hand and make your coverage as light and fluffy as possible.

Place just enough embers (rock wool) on the burner to obtain the glow and a gold yellow flame.

Do not place rock wool over large ports in rear portion of burner.

A thin layer of rock wool should be placed under open space between the front and middle logs.

Rock wool should **not** be placed in the area of the pilot assembly.

Glowing embers (rock wool) can cover the burner in between the front and middle logs, but very little is necessary to cover this area. Excess ember material causes the yellow flame to become orange and stringy. Apply just enough to obtain slow glow and a gold, yellow flame.

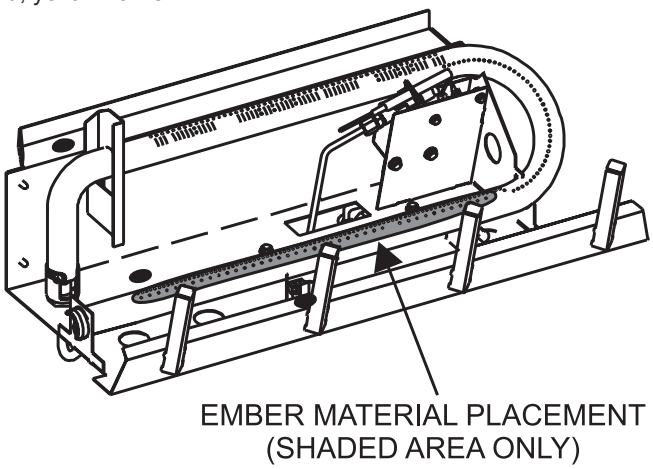

Figure 14

Replacement of loose material (glowing embers) must be purchased from Empire Comfort Systems, Inc. Application of excess loose material (glowing embers) may adversely affect performance of the heater.

⚠ WARNING
All previously applied loose material must be removed prior to reapplication.

Refer to Parts List, Pages 34 to 35 to order loose material (rock wool).

NOTICE: A single layer of embers is to be used when applying Platinum Bright Embers (alone or in combination with production embers) to the burner.

Replacement Loose Material (glowing embers)	Part Number
Rock Wool	15998
Platinum Bright Embers	PE-20-1

OPERATION INSTRUCTIONS/FLAME APPEARANCE

Flames from the pilot (rear right back side of the burner) as well as the main flame should be visually checked as the log set is installed.

In normal operation at full rate after 10 to 15 minutes, the flame appearance should be sets of yellow flames.

***NOTICE*:** All flames will be random by design, flame height will go up and down.

Avoid any drafts that alter burner flame patterns. Do not allow fans to blow directly into fireplace. Do not place a blower inside the burner area of the firebox. Ceiling fans may create drafts that alter flame patterns. Sooting and improper burning will result.

During manufacturing, fabricating and shipping, various components of this appliance are treated with certain oils, films or bonding agents. These chemicals are not harmful, but may produce annoying smoke and smells as they are burned off during the initial operation of the appliance, possibly causing headaches or eye or lung irritation. This is a normal and temporary occurrence.

The initial break-in operation should last 2-3 hours with the burner at the highest setting. Provide maximum ventilation by opening windows or doors to allow odors to dissipate. Any odors remaining after this initial break-in will be slight and will disappear with continued use.

PERIODIC CLEANING – Refer to parts diagram for location of items discussed below.

- Do not use cleaning fluid to clean logs or any part of heater.
- Logs - brush with soft bristle brush or vacuum with brush attachment.
- Remove loose particles and dust from the burner areas, controls, piezo covers and grate.
- Inspect and clean burner air intake hole. Remove lint or particles with brush. Failure to keep air intake hole clean will result in sooting and poor combustion.

ANNUAL CLEANING/INSPECTION – Refer to parts diagram for location of items discussed below.

- Inspect and clean burner air intake hole. Remove lint or particles with vacuum or brush. Failure to keep air intake hole clean will result in sooting and poor combustion.
- Inspect and clean all burner ports.
- Inspect ODS pilot for operation and accumulation of lint at air intake holes.
- Verify flame pattern and log placement for proper operation.
- Verify smooth and responsive ignition of main burner.

MAINTENANCE

Keep the control compartment, logs and burner area surrounding the logs clean by vacuuming or brushing area at least twice a year.

⚠ WARNING
The logs can get very hot – handle only when cool.

Always turn off gas to the pilot before cleaning. For relighting, refer to lighting instructions located on the rating plate of the log set.

Never obstruct the flow of the combustion and ventilation air. Keep the front of the fireplace clear of all obstacles and materials.

Leave at least 36" clearance from the front of the fireplace.

Screen should be closed during operation.

10,000 BTU MILLIVOLT LIGHTING INSTRUCTIONS

FOR YOUR SAFETY READ BEFORE LIGHTING

⚠ WARNING

If you do not follow these instructions exactly, a fire or explosion may result causing property damage, personal injury or loss of life.

A. This appliance has a pilot which must be lighted by hand. When lighting the pilot, follow these instructions exactly.

B. BEFORE LIGHTING, smell all around the appliance area for gas. Be sure to smell next to the floor because some gas is heavier than air and will settle on the floor.

WHAT TO DO IF YOU SMELL GAS

- **Do not try to light any appliance**
- **Do not touch any electrical switch; Do not use any phone in your building**
- **Immediately call your gas supplier from a neighbor's phone. Follow the gas supplier's instructions.**
- **If you cannot reach your gas supplier, call the fire department.**

C. Use only your hand to push in or turn the gas control knob. Never use tools. If the knob will not push in or turn by hand, don't try to repair it, call a qualified service technician. Force or attempted repair may result in a fire or explosion.

D. Do not use this appliance if any part has been under water. Immediately call a qualified service technician to inspect the appliance and to replace any part of the control system and any gas control which has been under water.

LIGHTING INSTRUCTIONS

1. STOP! Read the safety information above on this page.
2. Open bottom louver assembly (if applicable).
3. Set REMOTE/OFF/ON switch to "OFF".
4. Turn off all electric power to the appliance (if applicable).

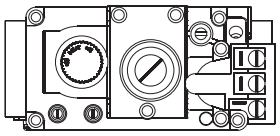

5. Push in gas control knob slightly and turn clockwise ↷ to "OFF". NOTE: Knob cannot be turned from "PILOT" to "OFF" unless knob is pushed in slightly. Do not force.

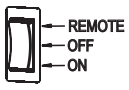

6. Wait ten minutes to clear out any gas. Then smell for gas, including near the floor. If you smell gas, STOP! Follow "B" in the safety information above. If you do not smell gas, go to the next step.
7. Find pilot - Follow metal tube from gas control. The pilot is located next to the burner, near the right side.

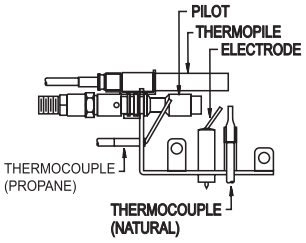

8. Turn gas control knob counterclockwise ↶ to "PILOT".
9. Push in control knob all the way and hold in. Repeatedly push the Piezo Ignitor Button until the pilot is lit. Continue to hold the control knob in for about one minute after the pilot is lit. Release knob, and it will pop back up. Pilot should remain lit. If it goes out, repeat steps 5 through 9.
   - If knob does not pop up when released, STOP and IMMEDIATELY call a qualified service technician or gas supplier.
   - If the pilot will not stay lit after several tries, turn the gas control knob to "OFF" and call your service technician or gas supplier.
10. Turn gas control knob counterclockwise ↶ to "ON".
11. Set REMOTE/OFF/ON switch to desired setting.
12. Turn on all electric power to the appliance (if applicable).
13. Close bottom louver assembly (if applicable).

TO TURN OFF GAS TO APPLIANCE

1. Open bottom louver assembly (if applicable).
2. Set REMOTE/OFF/ON switch to "OFF."
3. Turn off all electric power to the appliance if service is to be performed (if applicable).
4. Push in gas control knob slightly and turn clockwise ↷ to "OFF". Do not force.
5. Close bottom louver assembly (if applicable).

MILLIVOLT LIGHTING INSTRUCTIONS

FOR YOUR SAFETY READ BEFORE LIGHTING

⚠ WARNING

If you do not follow these instructions exactly, a fire or explosion may result causing property damage, personal injury or loss of life.

A. This appliance has a pilot which must be lighted by hand. When lighting the pilot, follow these instructions exactly.

B. BEFORE LIGHTING, smell all around the appliance area for gas. Be sure to smell next to the floor because some gas is heavier than air and will settle on the floor.

WHAT TO DO IF YOU SMELL GAS

- **Do not try to light any appliance**
- **Do not touch any electrical switch; Do not use any phone in your building**
- **Immediately call your gas supplier from a neighbor's phone. Follow the gas supplier's instructions.**
- **If you cannot reach your gas supplier, call the fire department.**

C. Use only your hand to push in or turn the gas control knob. Never use tools. If the knob will not push in or turn by hand, don't try to repair it, call a qualified service technician. Force or attempted repair may result in a fire or explosion.

D. Do not use this appliance if any part has been under water. Immediately call a qualified service technician to inspect the appliance and to replace any part of the control system and any gas control which has been under water.

LIGHTING INSTRUCTIONS

1. STOP! Read the safety information above on this page.
2. Open bottom louver assembly (if applicable).
3. Set REMOTE/OFF/ON switch to "OFF".
4. Turn off all electric power to the appliance (if applicable).
5. Push in gas control knob slightly and turn clockwise to "OFF".
   NOTE: Knob cannot be turned from "PILOT" to "OFF" unless knob is pushed in slightly. Do not force.
6. Wait ten minutes to clear out any gas. Then smell for gas, including near the floor. If you smell gas, STOP! Follow "B" in the safety information above. If you do not smell gas, go to the next step.
7. Find pilot - Follow metal tube from gas control. The pilot is located next to the burner, near the right side.

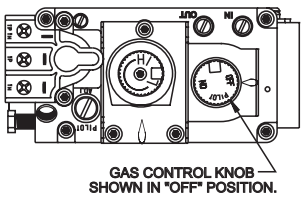

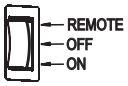

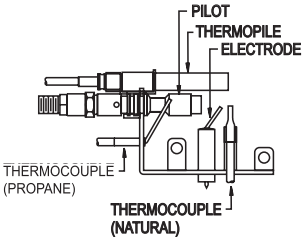

8. Turn gas control knob counterclockwise to "PILOT".
9. Push in control knob all the way and hold in. Repeatedly push the Piezo Ignitor Button until the pilot is lit. Continue to hold the control knob in for about one minute after the pilot is lit. Release knob, and it will pop back up. Pilot should remain lit. If it goes out, repeat steps 5 through 9.
   - If knob does not pop up when released, STOP and IMMEDIATELY call a qualified service technician or gas supplier.
   - If the pilot will not stay lit after several tries, turn the gas control knob to "OFF" and call your service technician or gas supplier.
10. Turn gas control knob counterclockwise to "ON".
11. Set REMOTE/OFF/ON switch to desired setting.
12. Turn on all electric power to the appliance (if applicable).
13. Close bottom louver assembly (if applicable).

TO TURN OFF GAS TO APPLIANCE

1. Open bottom louver assembly (if applicable).
2. Set REMOTE/OFF/ON switch to "OFF."
3. Turn off all electric power to the appliance if service is to be performed (if applicable).
4. Push in gas control knob slightly and turn clockwise to "OFF". Do not force.
5. Close bottom louver assembly (if applicable).

INTERMITTENT PILOT LIGHTING INSTRUCTIONS

FOR YOUR SAFETY READ BEFORE LIGHTING

⚠ WARNING

If you do not follow these instructions exactly, a fire or explosion may result causing property damage, personal injury or loss of life.

A. This appliance has a pilot which can be lighted with the manual on/off switch, a remote control, or by switching the receiver switch to the “ON” position. When lighting the pilot, follow these instructions exactly.

B. Before lighting smell all around the appliance area for gas. Be sure to smell next to the floor because some gas is heavier than air and will settle on the floor.

What To Do If You Smell Gas
- Do not try to light any appliance.
- Do not touch any electrical switch;
- Do not use any phone in your building.
- Immediately call your gas supplier from a neighbor's phone. Follow the gas supplier's instructions.
- If you cannot reach your gas supplier, call the fire department.

C. Use only your hand to push in or turn the gas control knob. Never use tools. If the knob will not push in or turn by hand, don't try to repair it; call a qualified service technician. Force or attempted repair may result in a fire or explosion.

D. Do not use this appliance if any part has been under water. Immediately call a qualified service technician to inspect the appliance and to replace any part of the control system and any gas control which has been under water.

LIGHTING INSTRUCTIONS

1. STOP! Read the safety information above.
2. Turn OFF electric power to the appliance.
3. Remove front surround panel assembly or bottom louver if included.
4. Turn gas shut-off counterclockwise to “On” position.
5. Wait ten minutes to clear out any gas. Then smell for gas, including near the floor. If you smell gas, STOP! Follow “B” in the safety information above on this page. If you do not smell gas, go to the next step.
6. Turn ON electric power to the appliance.
7. Find pilot - Follow metal tube from gas control. The pilot is behind the burner on the right side.
8. Turn main flame to on. If the pilot does not light within 60 seconds, stop and go to Step 5.

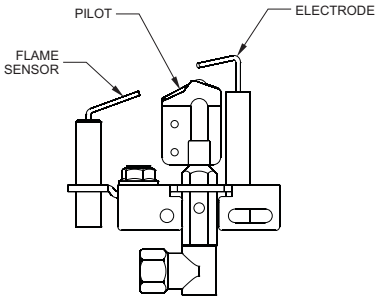

9. Refer to remote control instructions for detailed information, control features, and operation. **NOTE:** There is a CPI/IPI switch behind the right side panel that allows for a continuous standing pilot mode or an intermittent pilot mode. See appliance manual for location of this switch. If the pilot or burner does not stay lit (in the standing pilot mode), stop and immediately call a qualified service technician or gas supplier.
10. If the burner or pilot does not operate properly after several tries, turn the gas shut-off clockwise to “OFF” and call your service technician or gas supplier.
11. Replace the front surround assembly or close bottom louver assembly.
12. Operation of the gas valve is controlled by a manual on/off switch or a hand held remote control. Refer to remote instructions for detailed operation information.

GAS SHUT-OFF VALVE

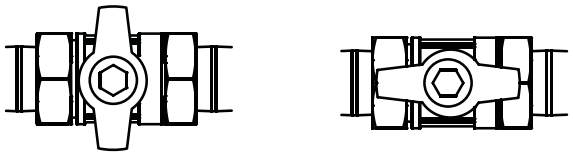

OFF ON

TO TURN OFF GAS TO FIREPLACE

1. Set REMOTE/OFF/ON switch to OFF.
2. Turn off all electric power to the appliance if service is to be performed (if applicable).
3. Lower bottom louver assembly.
4. Push in gas control knob slightly and turn clockwise to "OFF." Do not force.
5. Close bottom louver assembly.

HYDRAULIC THERMOSTAT LIGHTING INSTRUCTIONS

FOR YOUR SAFETY READ BEFORE LIGHTING

⚠ WARNING

If you do not follow these instructions exactly, a fire or explosion may result causing property damage, personal injury or loss of life.

A. This appliance has a pilot which must be lighted by hand. When lighting the pilot, follow these instructions exactly.

B. BEFORE LIGHTING smell all around the appliance area for gas. Be sure to smell next to the floor because some gas is heavier than air and will settle on the floor.
WHAT TO DO IF YOU SMELL GAS
- **Do not try to light any appliance.**
- **Do not touch any electrical switch; Do not use any phone in your building.**
- **Immediately call your gas supplier from a neighbor's phone. Follow the gas supplier's instructions.**
- **If you cannot reach your gas supplier, call the fire department.**

C. Use only your hand to push in or turn the gas control knob. Never use tools. If the knob will not push in or turn by hand, don't try to repair it; call a qualified service technician. Force or attempted repair may result in a fire or explosion.

D. Do not use this appliance if any part has been under water. Immediately call a qualified service technician to inspect the appliance and to replace any part of the control system and any gas control which has been under water.

LIGHTING INSTRUCTIONS

1. STOP! Read the safety information above.
2. Set thermostat (gas control knob) to lowest setting.
3. Turn off all electric power to the appliance (if applicable).
4. Push in gas control knob slightly and turn clockwise to "OFF". Do not force.

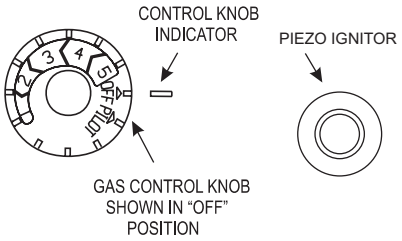

5. Wait ten minutes to clear out any gas. Then smell for gas, including near the floor. If you smell gas, STOP! Follow "B" in the safety information above. If you don't smell gas, go to the next step.
6. Find pilot - Follow metal tube from gas control. The pilot is located next to the burner, near the right side.

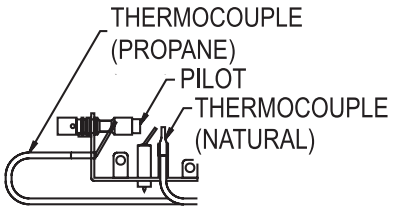

7. Turn gas control knob counterclockwise to "PILOT."
8. Push in gas control knob all the way and hold in. Repeatedly push the piezo ignitor button until pilot is lit (or use a match to light pilot). Continue to hold the control knob in for about one minute after the pilot is lit. Release knob and it will pop back up. Pilot should remain lit. If it goes out, repeat steps 4 through 8.
   - If knob does not pop up when released, stop and immediately call your service technician or gas supplier.
   - If the pilot will not stay lit after several tries, turn the gas control knob to "OFF" and call your service technician or gas supplier.
9. Turn gas control knob counterclockwise to "HI" (5).
10. Turn on all electric power to appliance (if applicable).
11. Set thermostat (gas control knob) to desired setting from "HI" (5) to "LO" (1).

TO TURN OFF GAS TO APPLIANCE

1. Set thermostat (gas control knob) to lowest setting.
2. Turn off all electric power to appliance if service is to be performed (if applicable).
3. Push in gas control knob slightly and turn clockwise to "OFF". Do not force.

PILOT FLAME CHARACTERISTICS

Figures 15, 17 and 19 show a correct pilot flame pattern. The correct flame will be blue and will extend beyond the thermocouple. The flame will surround the thermocouple just below the tip. A slight yellow flame may occur where the pilot flame and main burner flame meet. **Figures 16, 18 and 20** show an incorrect pilot flame pattern. The incorrect pilot flame is not touching the thermocouple. This will cause the thermocouple to cool. When the thermocouple cools, the heater will shut down.

MILLIVOLT PILOT

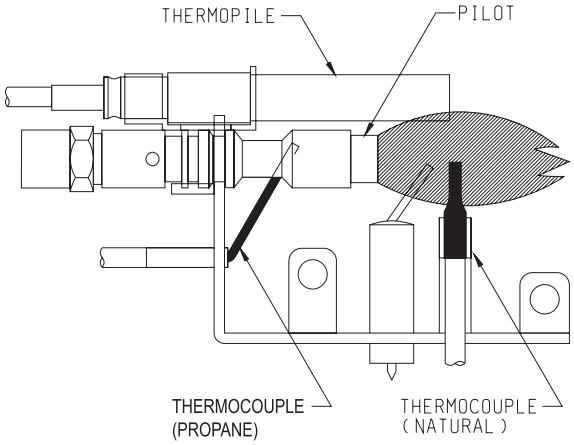

Correct Pilot Flame Pattern

Figure 15

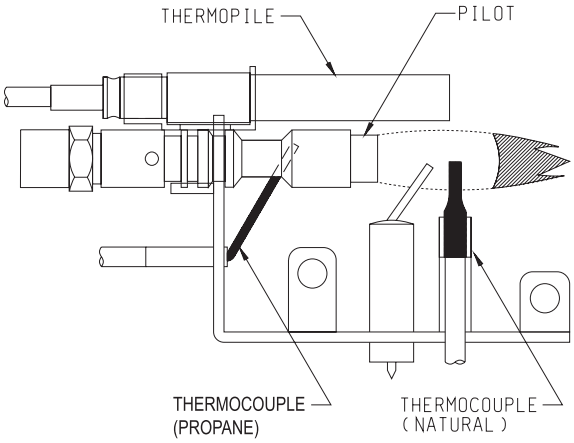

Incorrect Pilot Flame Pattern

Figure 16

If pilot flame pattern is incorrect, as shown in **Figure 16**

- See Troubleshooting, page 26.

HYDRAULIC THERMOSTAT PILOT

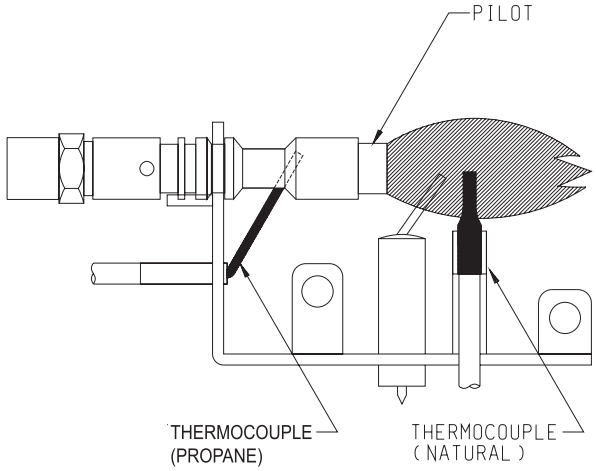

Correct Pilot Flame Pattern

Figure 17

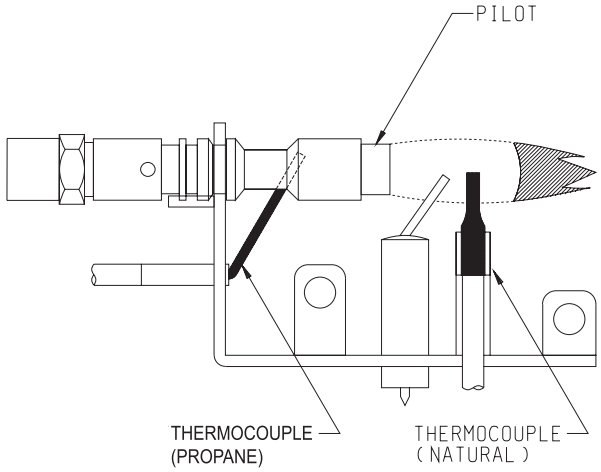

Incorrect Pilot Flame Pattern

Figure 18

If pilot flame pattern is incorrect, as shown in **Figure 18**

- See Troubleshooting, page 26.

PILOT FLAME CHARACTERISTICS

INTERMITTENT PILOT

Correct Pilot Flame Pattern

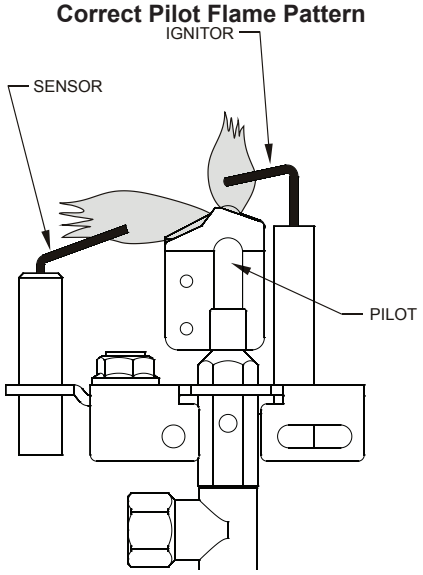

Figure 19

Incorrect Pilot Flame Pattern

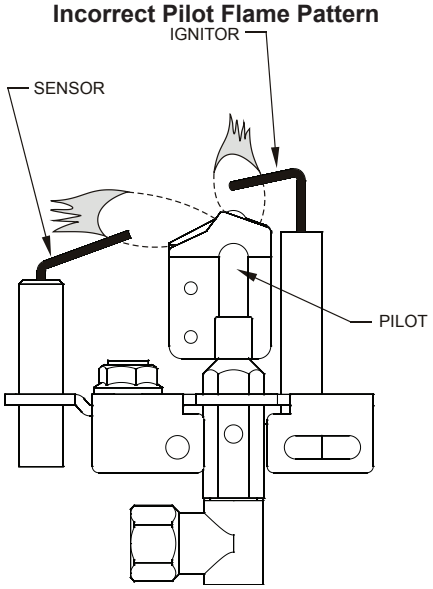

Figure 20

If pilot flame pattern is incorrect, as shown in **Figure 20:**

- See Troubleshooting, page 30-31.

Cleaning and Pilot Maintenance

Oxygen Depletion Sensor Pilot

When the pilot has a large yellow tip flame, clean the Oxygen Depletion Sensor as follows:

1. Clean the ODS pilot by loosening nut B from the pilot tubing. When this procedure is required, grasp nut A with an open end wrench.
2. Blow air pressure through the holes indicated by the arrows. This will blow out foreign materials such as dust, lint and spider webs. Tighten nut B also by grasping nut A.

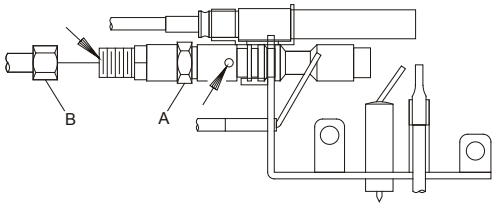

Millivolt Pilot
Figure 21

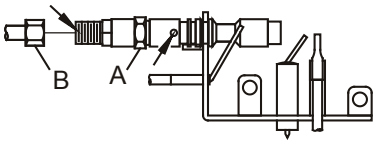

Hydraulic Thermostat Pilot
Figure 22

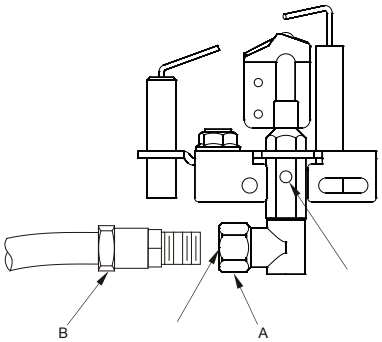

Intermittant Pilot
Figure 23

⚠ WARNING

Never use needles, wires, or similar cylindrical objects to clean the pilot to avoid damaging the calibrated ruby that controls the gas flow.

MAIN BURNER AND THERMOSTAT OPERATION

The VFD26F(M,P)(3,7) gas control maximum and minimum inputs are listed below.

OFF is the OFF position.

PILOT is the PILOT position.

VFD26F(M,P)(3,7)

Max.	20,000 BTU/HR
Min.	14,000 BTU/HR

VFD26FP3L10 and VFD26FP(30,70)L10

Max.	10,000
Min.	N/A

VFD26F(M,P)2 Main Burner Operation

The gas control modulates from a minimum input of 14,000 BTU/HR ("LO" (1) setting) to a maximum input of 20,000 BTU/HR ("HI" (5) setting).

Cleaning and Maintenance / Main Burner

⚠ WARNING

Turn off heater and let cool before cleaning.

⚠ CAUTION

You must keep control areas, burner and circulating air passageways of heater clean. Inspect these areas of heater before each use. Have heater inspected yearly by a qualified service person. Heater may need more frequent cleaning due to excessive lint from carpeting, bedding materials, etc.

Logs

Be careful cleaning and handling logs so as not to damage them. If logs break or fall apart in handling, spray the broken pieces and fibers with water, sweep up and discard.

MILLIVOLT WIRING

Label all wires prior to disconnection when servicing controls. Wiring errors can cause improper and dangerous operation. Verify proper operation after servicing.

Millivolt thermopile is self powered, gas valve does not require 110 volts. Maximum length of 20 feet of 16 AWG to conductor wires is to be used with all optional components.

Use the two leads (Green and Red wires) to attach optional components.

Check 750 Millivolt System Operation
Millivolt system and all individual components may be checked with a millivolt meter 0-1000 MV range.

Remote Receiver
Use the following steps to place the remote receiver adjacent to the gas valve.

Attention: The remote receiver bracket is not used in this installation.

1. The remote receiver **can not** be placed behind the gas valve and burner assembly.
2. When facing the appliance, the remote receiver must be placed to the **right** of the gas valve and burner assembly.

NOTICE: Do not let remote control receiver come in contact with burner assembly.

On circulating vent-free firebox, install remote control receiver behind bottom louver.

Refer to remote control installation and operating instructions for more details on remote control.

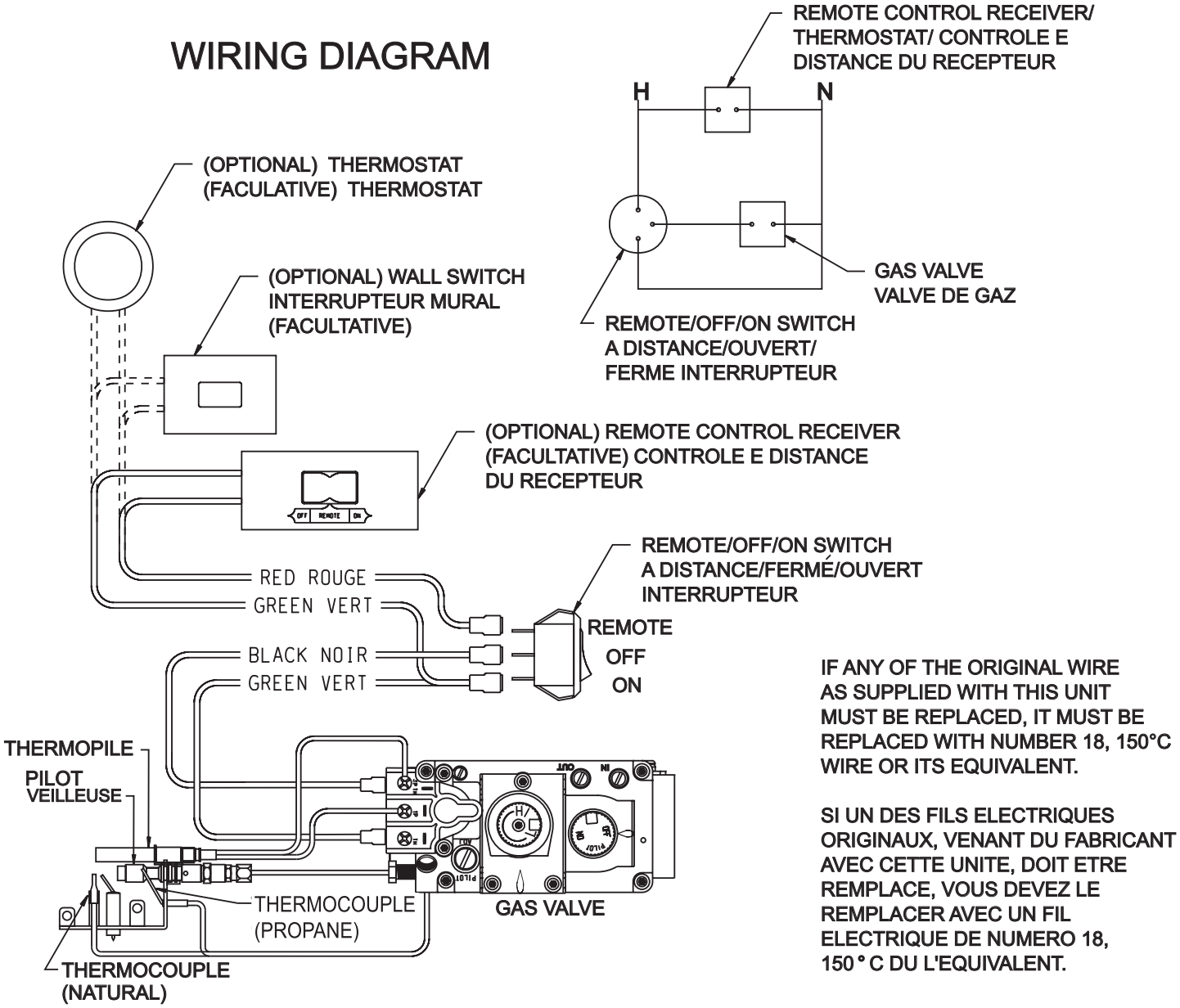

Figure 24

MILLIVOLT TROUBLESHOOTING

Turn appliance OFF and allow to cool before servicing. Only a qualified service person should service and repair the heater.

1. **When ignitor button is pressed, there is no spark at ODS/pilot.**
   a. Ignitor electrode positioned wrong - Replace pilot.
   b. Ignitor electrode is broken - Replace pilot.
   c. Ignitor electrode not connected to ignitor cable - Reconnect ignitor cable.
   d. Ignitor cable pinched or wet. Keep ignitor cable dry - Free ignitor cable if pinched by any metal or tubing.
   e. Broken ignitor cable - Replace ignitor cable.
   f. Bad piezo ignitor - Replace piezo ignitor.
2. **Appliance produces unwanted odors.**
   a. Appliance burning vapors from paint, hair spray, glues, etc. - Ventilate room. Stop using odor causing products while heater is running.
   b. Gas leak - Locate and correct all leaks.
3. **Appliance shuts off during use. (Pilot and main burner are off.)**
   a. Not enough fresh air is available for ODS/pilot to operate - Open window and/or door for ventilation.
   b. Low line pressure - Contact local gas company.
   c. ODS/pilot is partially clogged - Clean ODS/pilot.
   d. Defective thermocouple - Replace pilot.
4. **Appliance shuts off during use. (Pilot stays on.)**
   a. Low line pressure - Check line pressure to the valve.
   b. Defective thermopile - Check pilot flame, check wire connections, output should be a minimum of 325 millivolts across. TH/TP and TP terminals with REMOTE/ON/OFF switch off.
5. **Gas odor even when control knob is in OFF position.**
   a. Gas leak - Locate and correct all leaks.
   b. Control valve defective - Replace control valve.
6. **When ignitor button is pressed, there is spark at ODS/pilot, but no ignition.**
   a. Gas supply turned off or manual shutoff valve closed - Turn on gas supply or open manual shutoff valve.
   b. Control knob not in PILOT position - Turn control knob to PILOT position.
   c. Control knob not pressed in while in PILOT position - Press in control knob while in PILOT position.
   d. Air in gas lines when installed - Continue holding down control knob. Repeat igniting operation until air is removed.
   e. ODS/pilot is clogged - Replace ODS/pilot assembly or get it serviced.
   f. Gas regulator setting is not correct - Replace gas regulator.
7. **ODS/pilot lights but flame goes out when control knob is released.**
   a. Control knob not fully pressed in - Press in control knob fully.
   b. Control knob not pressed in long enough - After ODS/pilot lights, keep control knob pressed in 30 seconds.
   c. Manual Shutoff valve not fully open - Fully open manual shutoff valve.
   d. Thermocouple connection loose at control valve - Hand tighten until snug, then tighten 1/4 turn more.
   e. Pilot flame not touching thermocouple, which allows thermocouple to cool, causing pilot flame to go out. This problem could be caused by either low gas pressure or dirty or partially clogged ODS/pilot - Contact local gas company.
   f. Thermocouple damaged - Replace thermocouple.
   g. Control valve damaged - Replace control valve.
8. **Burner does not light after ODS/pilot is lit.**
   a. Burner orifice clogged - Clean burner or replace main burner orifice.
   b. Burner orifice diameter is too small - Replace burner orifice.
   c. Inlet gas pressure is too low - Contact qualified service person.
9. **If burning at main burner orifice occurs (a loud, roaring blow torch noise).**
   a. You must turn off burner assembly and contact a qualified service person.
   b. Manifold pressure is too low - Contact local gas company.
   c. Burner orifice clogged - Clean burner or replace burner orifice.
10. **Logs appear to smoke after initial operation.**
    a. Vapors from paint or curing process of logs - Problem will stop after a few hours of operation. Run the heater with the damper open if you have one, or open a window for the first few hours.
    Log heater is intended to be smokeless. Turn OFF heater and call qualified service person.
11. **Heater produces a whistling noise when main burner is lit.**
    a. Turning control knob to HIGH position when main burner is cold - Turn control knob to LOW position and let warm up for a minute.
    b. Air in gas line - Operate burner until air is removed from line. Have gas line checked by local gas company.
    c. Dirty or partially clogged burner orifice - Clean burner or replace burner orifice.
12. **No gas to pilot.**
    a. Propane-regulator shut down due to inlet pressure too high - Verify Propane tank regulator is installed and set at 11" to 13" w.c. Replace regulator on heater.

If the gas quality is bad, your pilot may not stay lit, the burners may produce soot and the heater may backfire when lit. If the gas quality is bad or pressure is low, contact your local gas supplier immediately.

IP ELECTRONIC SYSTEM OPERATING INSTRUCTIONS

5.25 VDC ELECTRONIC CONTROL VALVE

The electronic control valve system includes the ability to switch the pilot from a standing pilot mode to an intermittent pilot mode.

- **IPI Mode** - In the Intermittent Pilot mode, when the unit is turned ON, it will cause spark to the pilot, light the pilot, then allow the burner to light. When the unit is turned to OFF, both the burner and pilot will be OFF.
- **CPI Mode** - In the Continuous Pilot mode, the pilot remains ON continuously even when the burner is turned OFF.

NOTE: A small toggle switch is located on a bracket that is used to switch from IPI (upward position) to the CPI (downward position). **See Figure 25.**

When the unit is turned to ON, the electrical current will energize a spark to the pilot igniter. Once the pilot sensor heats up (after a few seconds), the valve will be energized, allowing gas to flow to the burner.

1. Follow the SAFETY and LIGHTING INSTRUCTIONS for Intermittent Pilot controls found in this manual, and on labels found in the control compartment located in the lower cavity of the appliance.
2. During the operating season (or in power outage periods), it is recommended that the pilot remain in the CPI (standing pilot mode) to reduce cold start issues, and/or conserve battery backup power during a power outage.
3. The gas valve has inlet and outlet pressure taps as shown in **Figure 25.** Refer to page 11 for gas pressure requirements.

NOTE: The gas control has a manual HI/LO flame adjustment knob (regulator) that allows you to increase or decrease the height of the burner flame. **See Figure 25.** Rotate the HI/LO knob counterclockwise to “HI” to increase the flame height, and clockwise to “LO” to decrease the flame height.

OPTIONAL REMOTE CONTROLS

Optional remote controls are available for use with this appliance. To connect the remote receiver to the appliance, first disconnect the ON/OFF switch wires from the white and green wire connectors and connect the wires from the remote receiver to the green and white wire connectors. **See Figure 25.**

Follow the instructions included with the remote control for programming and other operational information.

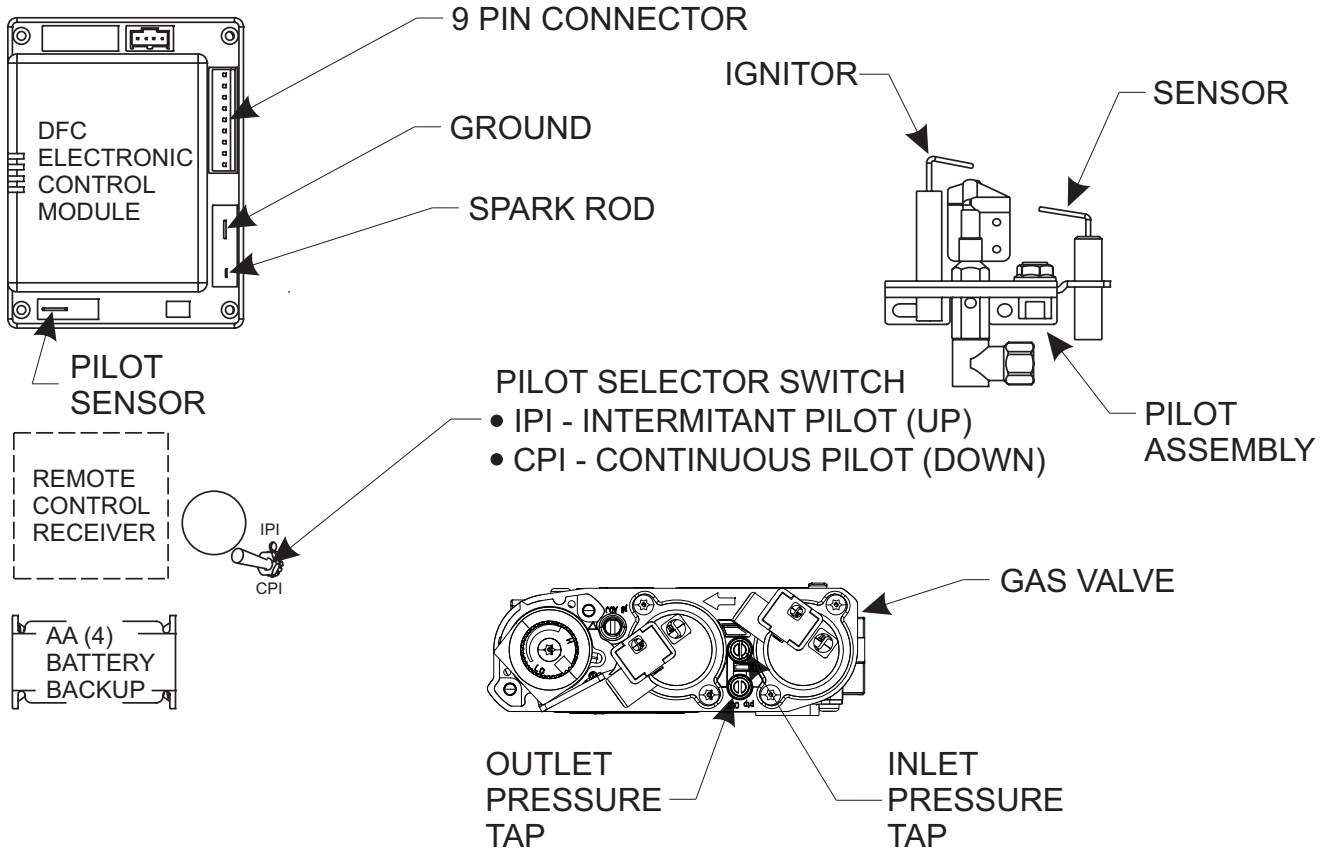

Figure 25

IP ELECTRONIC SYSTEM WIRING DIAGRAM

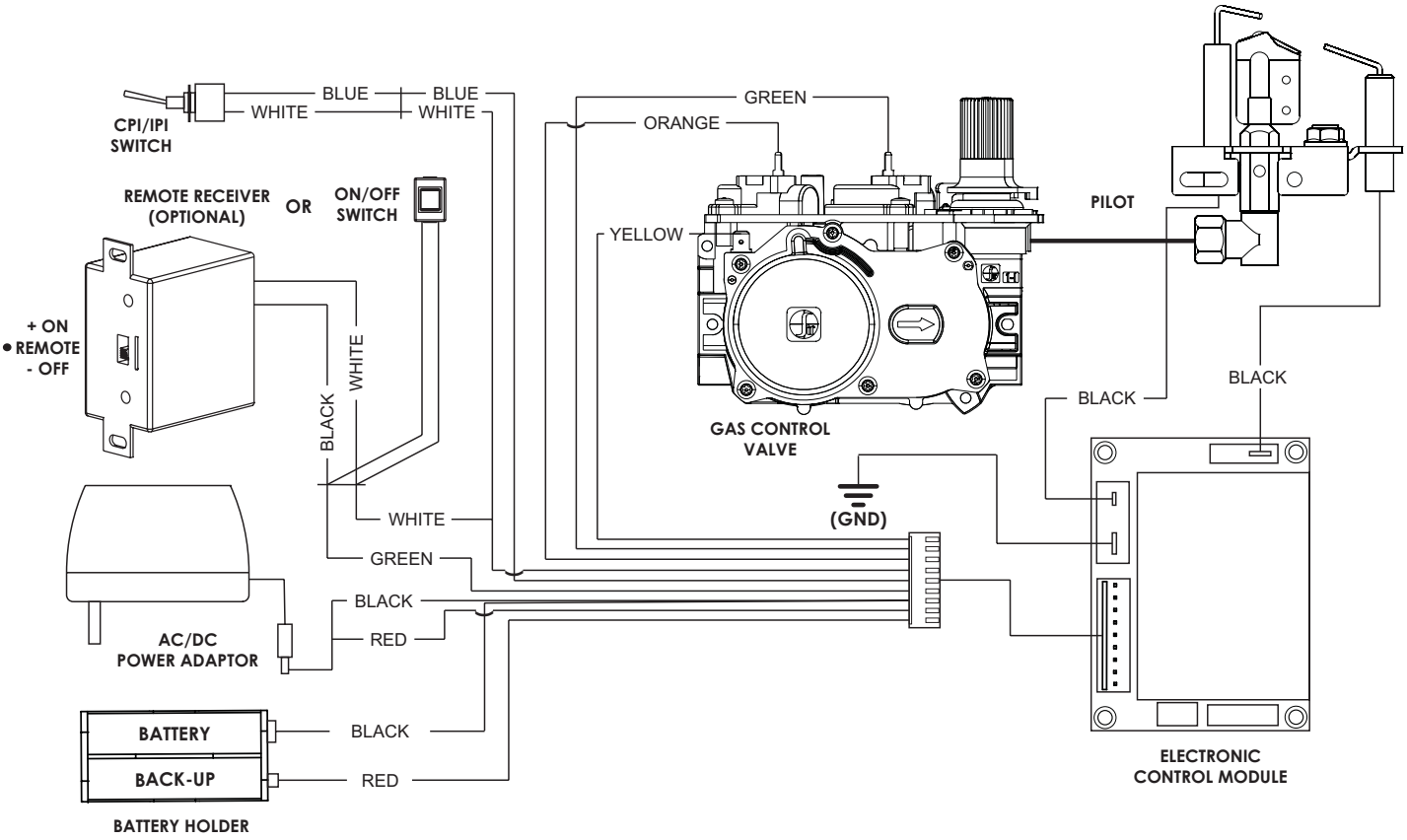

If any of the original wire as supplied with this unit must be replaced, it must be replaced with equivalent gauge and temperature rated wire.

This appliance is only for use with the type of gas indicated on the rating plate and may be installed in an aftermarket, permanently located, manufactured (mobile) home where not prohibited by local codes. This appliance is not convertible for use with other gases.

⚠ CAUTION

Do not operate the appliance with panel(s) removed, cracked or broken. Replacement of the panel(s) should be done by a licensed or qualified service person.

⚠ WARNING

Improper installation, adjustment, alteration, service or maintenance can cause property damage, personal injury or loss of life. Installation and service must be performed by a qualified installer, service agency or the gas supplier.

INTERMITTENT CONTROL SYSTEM TROUBLESHOOTING

Brief Description of the Components
The gas valve is fitted with a manual HI/LO knob to allow for manual modulation of the gas outlet pressure to the appliance burner.

The Digital Fireplace Control (DFC) is an automatic gas ignition system based on a single microcontroller core. This control manages all functions related to ignition, flame sensing and supervision for atmospheric applications.
The DFC can be set to provide continuous or intermittent ignition control sequences and flame monitoring with safety shutdown in case of failure.
The DFC is set up as a stand alone (AC powered system with battery back up. See Lighting Instructions on page 20 and Wiring Diagram on page 28.

Troubleshooting
Before proceeding with the procedures in the following troubleshooting table, verify that the power supply (AC/DC adapter) is present and that the batteries inside the receiver and/or optional battery pack are fresh and installed with correct polarity.
Make sure all the connections between the wire harnesses and system components are proper and positive.
Verify that the static inlet pressure meets the manufacturer's recommended inlet pressure. If necessary adjust the line pressure regulator.
If the recommended actions for the following troubleshooting chart do not help to address the problem consider replacing wiring harnesses.

WARNING:
Any actions performed on the gas valve must be performed in accordance with this instruction manual. Likewise, any actions performed on the DFC or other system components must be done in accordance with the individual component instructions.
Replacement of components must be performed in accordance with this instructions manual.

INTERMITTENT CONTROL SYSTEM TROUBLESHOOTING

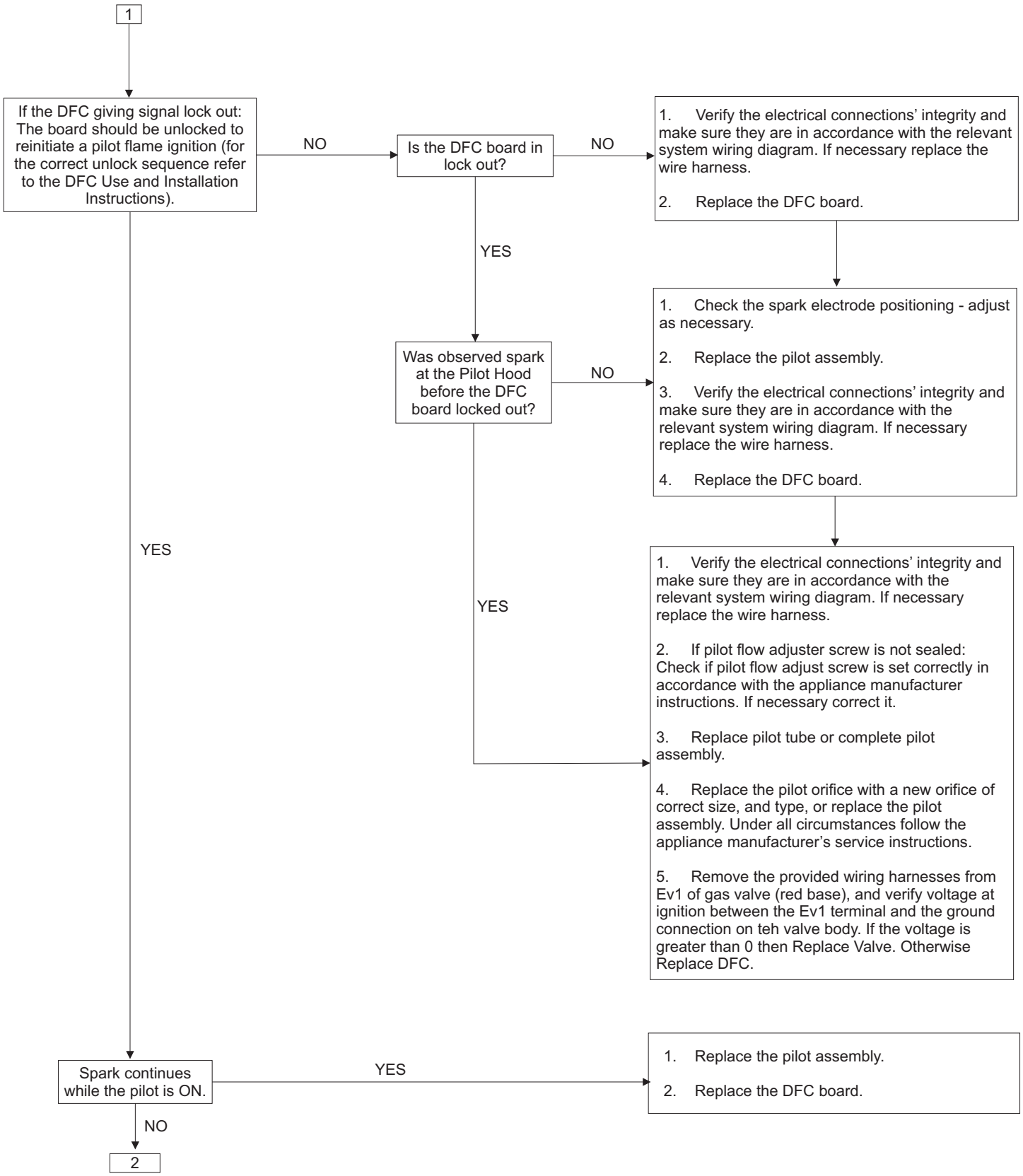

INTERMITTENT CONTROL SYSTEM TROUBLESHOOTING

2

Main burner lights when the pilot only should light.

YES →

1. Replace DFC board.
2. Replace the gas valve.

NO ↓

Pilot holds the flame?.

NO →

1. Verify the pilot flame fully engulfs the tip of the sense electrode. If not replace the pilot assembly.
2. Replace the pilot assembly.
3. Carefully clean the electrical connections of the sense cable, and the DFC board sense cable connection.
4. Replace the sense cable, or the cable-sense electrode assembly, or the pilot assembly.
5. Verify the pilot is properly grounded.
6. Replace the pilot orifice with a new orifice of correct size, and type, or replace the pilot assembly.
7. If pilot flow adjuster screw is not sealed, correct it.

YES ↓

Main burner ignites?

NO →

1. Verify the electrical connections' integrity and make sure they are in accordance with the relevant system wiring diagram. If necessary replace the wire harness.
2. Check if the optional remote transmitter is in "thermostat" or "on" mode and verifyt there is a call for heat (f using a thermostat remote). Adjust the setting for heat.
3. Verify that the pilot hood is properly fitted and a pilot flame is directed to properly ignite the main appliance burner.
4. Replace the main burner orifice with a new orifice of correct size and type, or replace the pilot assembly. Under all circumstances follow the service instructions.
5. Remove the provided wiring harnesses from EV2 of gas valve (red base), and verify voltage at ignition between the EV1 terminal and the ground connection on the valve body.
   5.1 If the voltage is greater than 0 then Replace Valve.
   5.2 Or Replace DFC.
6. Check the pressure at the outlet pressure test point out according to the manufacturer's instruction. If not in accordance, replace the gas valve.

YES ↓

Main burner remains ON

NO →

1. Verify the electrical connections' integrity and make sure they are in accordance with the relevant system wiring diagram. If necessary replace the wire harness.
2. Check the pressure at the outlet pressure test point out according the manufacturer's instruction. If not in accordance replace the gas valve.
3. With the system in the OFF position, connect the voltmeter between the EV2 terminal (green base) on the valve, and the ground on the valve body.
   Turn the system ON, let pilot light, and observe the following voltage sequence: once the pilot flame is proved, the voltage on EV2 should spike to approx. 5 VdC for approx. 2 sec and then drop to approx. 0.6 VdC continuously.
   3.1 If the sequence is respected, replace the gas valve.
   3.2 If the sequence is not respected, replace the DFC board.

↓

Main burner modulates properly?

→

1. Replace the main burner orifice with a new orifice of correct size (partial blockage possible). Verify that the main burner flame modulates. If it does not modulate replace the gas valve.
2. Verify that the gas valve outlet pressure limits are in accordance with the manufacturer specifications. If not replace the gas valve.

FOR MANUAL HI/LO VERSION

3. Verify the flame changes while rotating the HI/LO knob on the front of the gas valve. If there is no change replace the gas valve.

JUNCTION BOX WIRING INSTALLATION INSTRUCTIONS

⚠ CAUTION

All wiring should be done by a qualified electrician and shall be in compliance with all local, city and state building codes. Before making the electrical connection, make sure that main power supply is disconnected. The appliance, when installed, must be electrically grounded in accordance with local codes or, in the absence of local codes, with the national electrical code ansi/nfpa 70 (latest edition).

A factory installed junction box is located on the lower right side of the fireplace. Wiring must be fed to the junction box and attached to the receptacle that is provided. Leave approximately 6" of wire in the junction box for connection.

Attach black wire to hot side (brass screws) of the receptacle and white wire to opposite side (silver screws) of receptacle. The ground wire should be attached to the green (ground) screw.

Install the receptacle into the junction box. Attach cover plate.

JUNCTION BOX CONNECTIONS

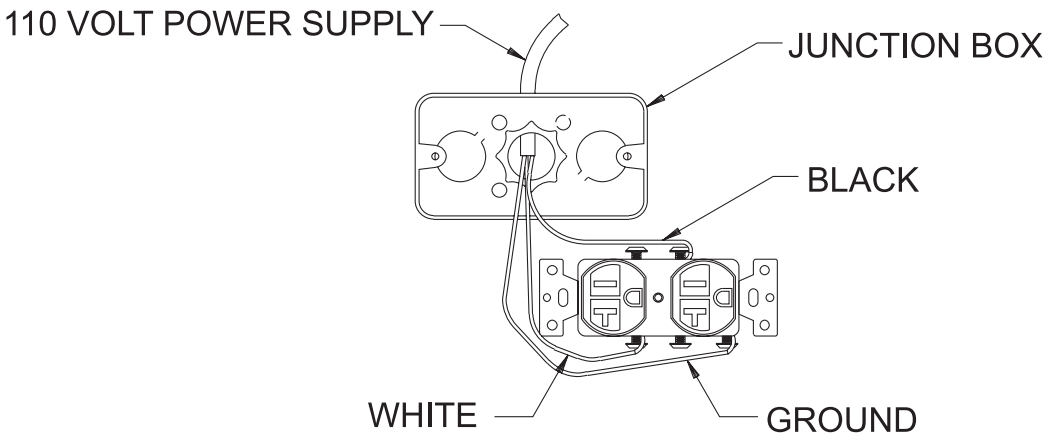

Figure 26

PARTS LIST

INDEX NO	PART NO.	DESCRIPTION
COMMON PART NUMBERS		
1	10554	NAILING FLANGE
2	17162	JUNCTION BOX ASSEMBLY
3	23461	TRIM - TOP
4	23462	TRIM – LEFT
5	23463	TRIM – RIGHT
6	23464	LOUVER ASSEMBLY – UPPER
7	23465	LOUVER ASSEMBLY – LOWER
8	23460	HOOD
9	23470	SCREEN FRAME ASSEMBLY
13	17235	BRACKET, LOG LOCATOR
15	R7624	AIR SHUTTER
17	R7572	JAMB NUT
19	P212	FITTING, ORIFICE
NS	R5668	IGNITOR WIRE
NS	15998	ROCK WOOL
VFD26F(M,P)20L(N,P)		
10	R5170	PILOT ASSEMBLY (PROPANE)
10	R5171	PILOT ASSEMBLY (NATURAL)
11	21590	PILOT BRACKET (PROPANE)
11	23106	PILOT BRACKET (NATURAL)
12	23449	PILOT SHIELD
14	R9022	BURNER TUBE
16	P182	ORIFICE (PROPANE)
16	P265	ORIFICE (NATURAL)
18	23473	BURNER BASE PLATE ASSEMBLY
20	R2423	CONNECTOR, MALE
21	23477	VALVE (NATURAL)
21	23487	VALVE (PROPANE)
22	23475	TUBING ASSEMBLY - SUPPLY
23	23476	TUBING ASSEMBLY
27	P239	NIPPLE, 3/8 NPT X 1 ½
28	R2479	REGULATOR (NATURAL)
28	R2480	REGULATOR (PROPANE)
29	R2708	IGNITOR, PIEZO
VFD26F(M,P)30L(N,P)		
10	R3623	PILOT ASSEMBLY (PROPANE)
10	R3624	PILOT ASSEMBLY (NATURAL)

INDEX NO.	PART NO.	DESCRIPTION
11	21590	PILOT BRACKET (PROPANE)
11	23106	PILOT BRACKET (NATURAL)
12	23449	PILOT SHIELD
14	R9022	BURNER TUBE
16	P182	ORIFICE (PROPANE)
16	P288	ORIFICE (NATURAL)
18	23473	BURNER BASE PLATE ASSEMBLY
20	R2423	CONNECTOR, MALE
21	R3625	VALVE (PROPANE)
21	R3626	VALVE (NATURAL)
22	23493	TUBING ASSEMBLY - SUPPLY
23	23496	TUBING ASSEMBLY (PROPANE)
23	23492	TUBING ASSEMBLY (NATURAL)
24	R7063	REGULATOR, NAT PILOT (NATURAL)
25	23491	TUBING ASSEMBLY (NATURAL)
26	23450	VALVE BRACKET
29	R2708	IGNITOR, PIEZO
30	R3436	SWITCH, REMOTE/OFF/ON
NS	R10947	WIRE ASSEMBLY
VFD26F(M,P)30L10(N,P)		
10	R3623	PILOT ASSEMBLY (PROPANE)
10	R3624	PILOT ASSEMBLY (NATURAL)
11	21590	PILOT BRACKET (PROPANE)
11	23106	PILOT BRACKET (NATURAL)
12	23449	PILOT SHIELD
14	27426	BURNER TUBE
16	P214	ORIFICE (NATURAL)
16	P193	ORIFICE (PROPANE)
20	R2423	CONNECTOR, MALE
21	R9368	VALVE (NATURAL)
21	R9369	VALVE (PROPANE)
22	23493	TUBING ASSEMBLY - SUPPLY
23	23496	TUBING ASSEMBLY (PROPANE)
23	23476	TUBING ASSEMBLY (NATURAL)
24	27426	REGULATOR, NATURAL PILOT
25	23491	TUBING ASSEMBLY (NATURAL)
26	23450	VALVE BRACKET
29	R2708	IGNITOR, PIEZO
30	R3436	SWITCH, REMOTE/OFF/ON
NS	R10947	WIRE ASSEMBLY

ATTENTION: When ordering parts, it is very important that **part number** and **description** of part coincide.

PARTS LIST

INDEX NO.	PART NO.	DESCRIPTION
VFD26F(M,P)70L(N,P)		
10	R11327 2019	PILOT ASSEMBLY (PROPANE)
10	R11328 2019	PILOT ASSEMBLY (NATURAL)
11	30703	PILOT BRACKET (PROPANE)
14	R9022	BURNER TUBE
16	P182	ORIFICE (PROPANE)
16	P288	ORIFICE (NATURAL)
18	30704	BURNER BASE PLATE ASSEMBLY
20	R6207	ELBOW NPT x TUBE
21	R11126	VALVE (PROPANE)
21	R11125	VALVE (NATURAL)
22	30981	TUBING ASSEMBLY - INLET
23	33808	PILOT TUBING ASSEMBLY (PROPANE)
23	33807	TUBING ASSEMBLY - PILOT TO REGULATOR (NATURAL)
24	R7063	REGULATOR, NATURAL PILOT (NATURAL)
25	30984	TUBING ASSEMBLY - VALVE TO REGULATOR (NATURAL)
26	29377	VALVE BRACKET
30	R2522	SWITCH, REMOTE/OFF/ON
31	B100100	NIPPLE - NPT x TUBE
32	R11332	24" SENSOR WIRE
33	R11333	24" IGNITOR WIRE
34	29699	SWITCH BRACKET
35	R11122	BATTERY HOLDER
36	R11123	WIRE HARNESS
37	R2667	5-1/2" BLACK WIRES (QTY 2)
38	R11128	AC ADAPTER
39	R11127	DFC CONTROL BOARD
NS	R7591	FLEX WITH SHUT OFF
VFD26F(M,P)70L10(N,P)		
10	R11327 2019	PILOT ASSEMBLY (PROPANE)
10	R11328 2019	PILOT ASSEMBLY (NATURAL)
11	30703	PILOT BRACKET (PROPANE)

INDEX NO.	PART NO.	DESCRIPTION
14	27426	BURNER TUBE
16	P214	ORIFICE (NATURAL)
16	P193	ORIFICE (PROPANE)
18	30704	BURNER BASE PLATE ASSEMBLY
20	R6207	ELBOW NPT x TUBE
21	R11210	VALVE (NATURAL)
21	R11211	VALVE (PROPANE)
22	30981	TUBING ASSEMBLY - INLET
23	33808	PILOT TUBING ASSEMBLY (PROPANE)
23	33807	TUBING ASSEMBLY - PILOT TO REGULATOR (NATURAL)
24	R7063	REGULATOR, NAT PILOT (NATURAL)
25	30984	TUBING ASSEMBLY - VALVE TO REGULATOR (NATURAL)
26	29377	VALVE BRACKET
30	R2522	SWITCH, REMOTE/OFF/ON
31	B100100	NIPPLE - NPT x TUBE
32	R11332	24" SENSOR WIRE
33	R11333	24" IGNITOR WIRE
34	29699	SWITCH BRACKET
35	R11122	BATTERY HOLDER
36	R11123	WIRE HARNESS
37	R2667	5-1/2" BLACK WIRES (QTY 2)
38	R11128	AC ADAPTER
39	R11127	DFC CONTROL BOARD
NS	R7591	FLEX WITH SHUT-OFF
5 PIECE LOG ASSEMBLY		
41	R7587	REAR LOG
42	R7586	MIDDLE LOG
43	R7585	FRONT LEFT LOG
44	R7554	FRONT RIGHT LOG
45	R7588	Y-TWIG

NS - NOT SHOWN

PARTS VIEW

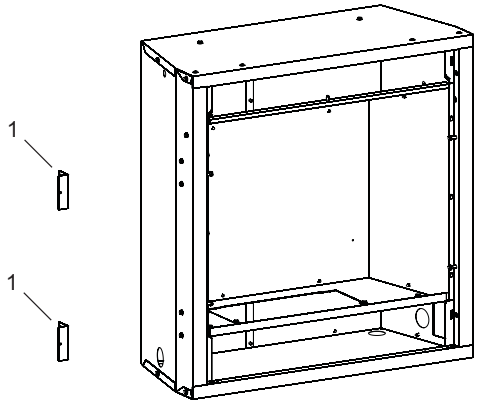
1
1
1
1
2

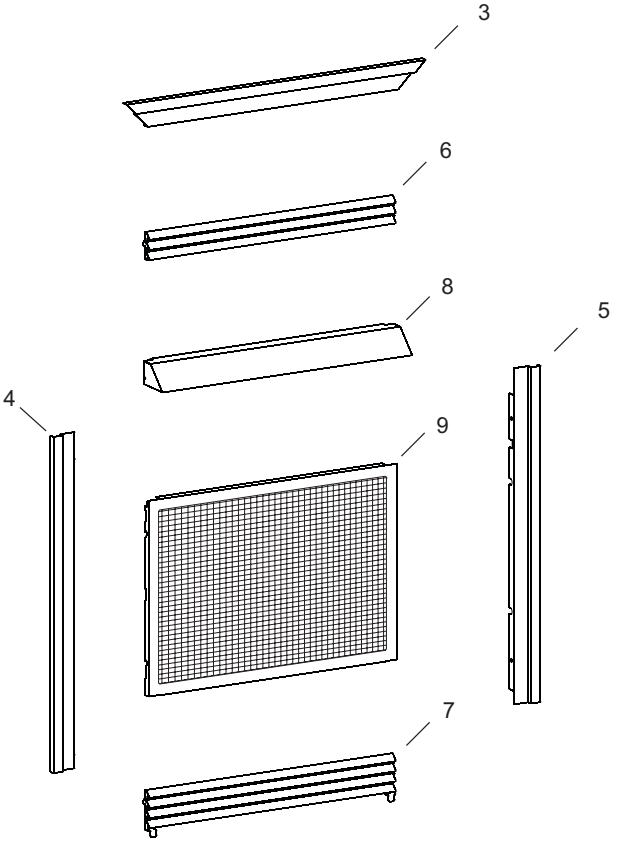
3
6
8
5
4
9
7

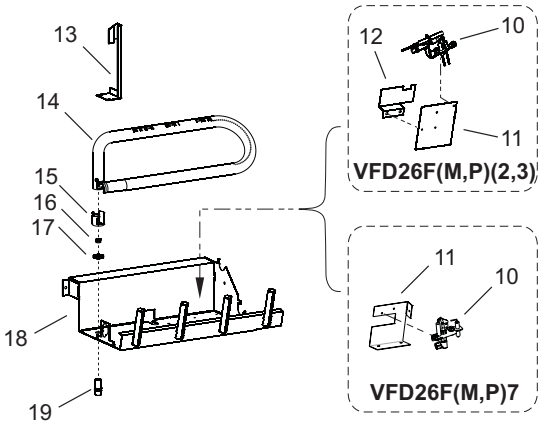
13
14
15
16
17
18
19
12
10
11
VFD26F(M,P)(2,3)
11
10
VFD26F(M,P)7

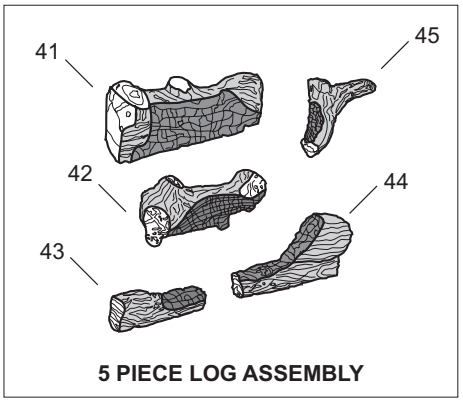
41
45
42
44
43
5 PIECE LOG ASSEMBLY

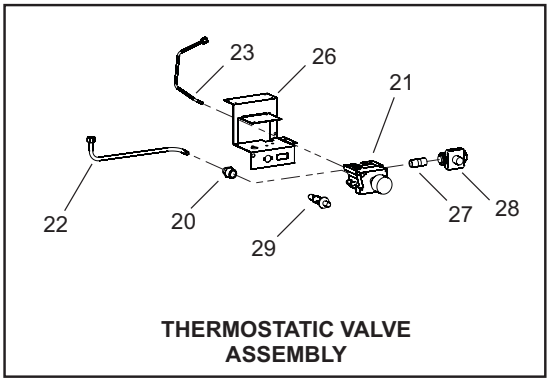
23
26
21
22
20
29
27
28
THERMOSTATIC VALVE ASSEMBLY

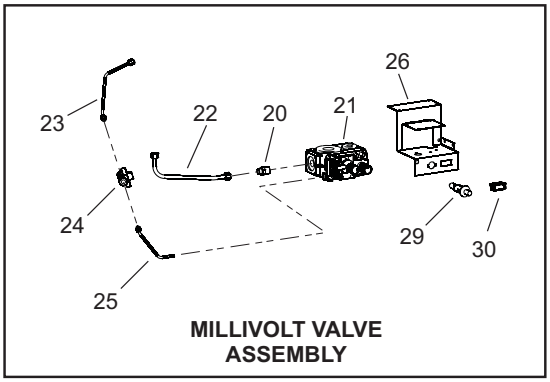
23
22
20
21
26
24
25
29
30
MILLIVOLT VALVE ASSEMBLY

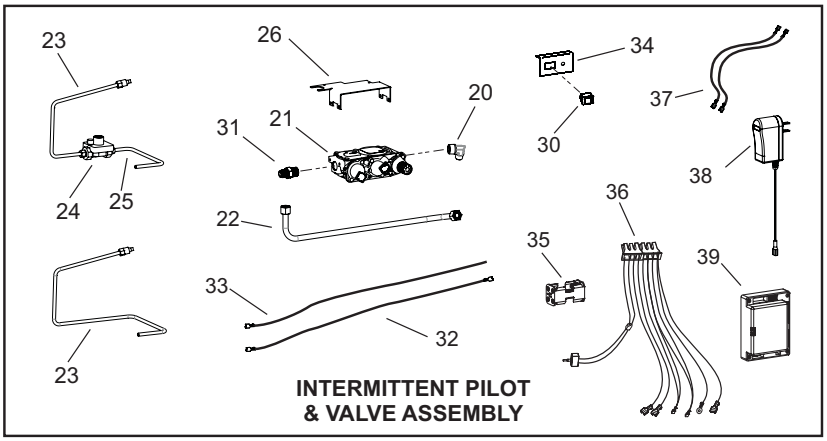
23
26
34
37
20
31
21
30
38
24
25
36
22
35
39
33
32
23
INTERMITTENT PILOT & VALVE ASSEMBLY

FBBX BLOWER KIT EXTENSION INSTALLATION INSTRUCTIONS

For Unvented Gas Fireplace Model VFD26F(M,P)2, VFD26F(M,P)3

Disregard FBB4 Blower Installation Instructions. Follow the installation instructions with your FBBX blower extension kit or the VFD26 Instruction Manual.

Attention: If installed, do not damage gas inlet supply line when blower assembly is inserted into fireplace. Remove the gas inlet supply line.

1. Remove blower parts from the FBB4 kit and the parts from the FBBX kit.
2. Remove fan control from wire harness in the FBB4 kit.
3. Attach the fan control to the fan control bracket using the two 8x1/4" screws provided.
4. If installed, turn OFF gas supply to fireplace.
5. If applicable, turn OFF electric supply to fireplace.
6. Lower bottom louver on fireplace.
7. Remove upper louver.
8. Remove screen frame assembly
9. If applicable, remove logs from burner assembly.
10. Remove burner assembly from firebox (three screws). **See Figure 28.**
11. Position blower assembly behind gas valve, align notch on back of blower assembly with center screw on fireplace back and push blower assembly against fireplace back. The bower wheel must be centered with the back wall of the fireplace. Place blower assembly against the back wall. The magnets on the back and bottom of blower assembly will sufficiently hold blower assembly in place.
12. Position speed control to the right of gas valve. Attach speed control to bottom of fireplace. The magnets on the bottom of speed control will sufficiently hold the speed control in place.
13. Attach fan control bracket to upper right side of firebox with one #10 x 1/2 hex screw provided. **See Figure 27.**
14. Attach wire harness from the FBBX kit to the terminals on the fan control.
15. Route the wire harness along the right side of the firebox.
16. Connect the wire harness from the fan control to the wire harness from the speed control.
17. Insert power cord plug into junction box.
18. Replace burner assembly in firebox with the three screws removed in Step 10.
19. If applicable, replace logs onto burner assembly.
20. Replace screen frame assembly.
21. Install upper louver. Close bottom louver on fireplace.

***NOTICE*:** This blower is equipped with a heat activated fan control switch. Fan will operate when the fireplace warms up, and will turn off when the fireplace cools down.

22. Installation of FBB4 and FBBX option variable speed blower assembly is completed.

Blower Motor

The blower motor does not have oiling holes. Do not attempt to oil the blower motor.

Blower Wheels

The blower wheels will collect lint and could require periodic cleaning. If the air output decreases or the noise level increases, it indicates a dirty blower wheel. Remove fan and clean blower wheels.

⚠ WARNING

Unplugging of blower accessory will not stop the heater from cycling. To turn off gas to the heater (millivolt model): push in gas control knob slightly and turn clockwise to OFF." Do not force.

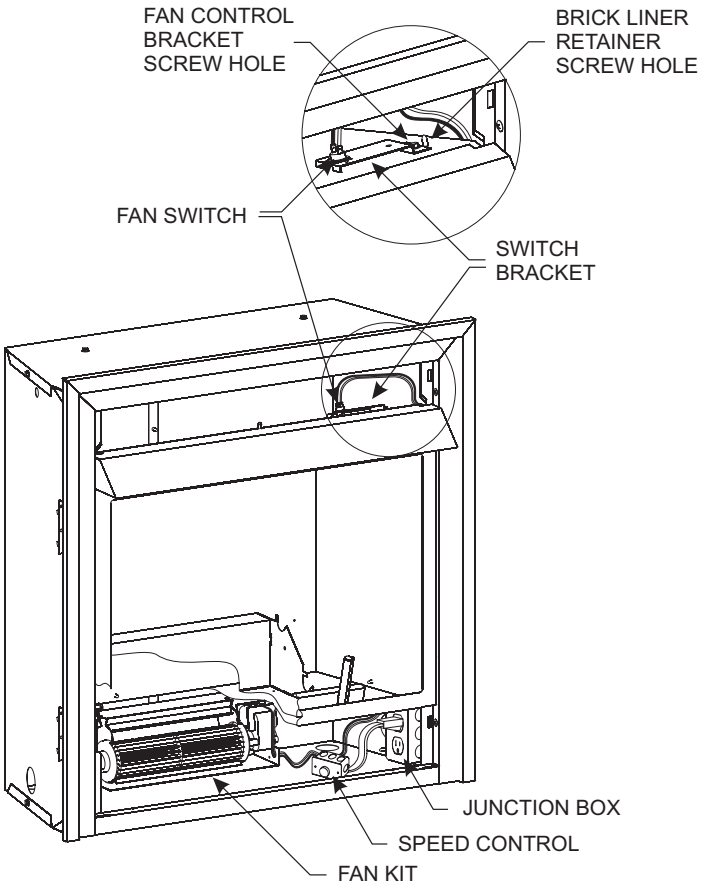

Figure 27

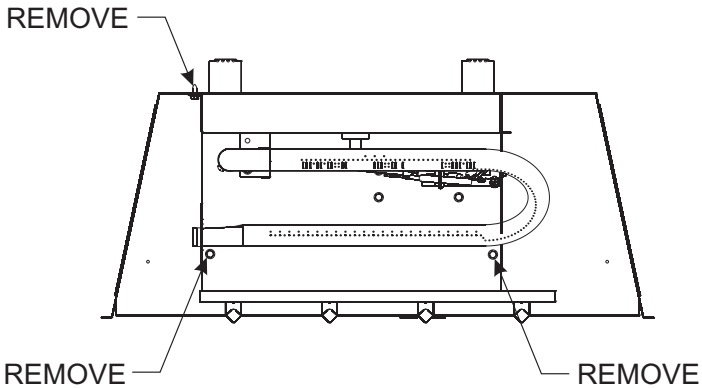

Figure 28

FBBX BLOWER KIT EXTENSION INSTALLATION INSTRUCTIONS

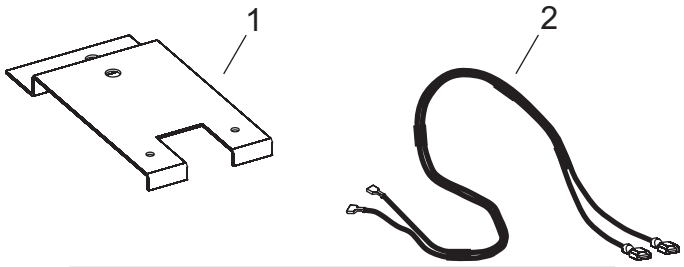

1	11508	SWITCH BRACKET
2	R9377	HARNESS
N/S	R1131	SCREWS
N/S	R2737	#10 X 1/2 SCREWS

FBBX Blower Kit

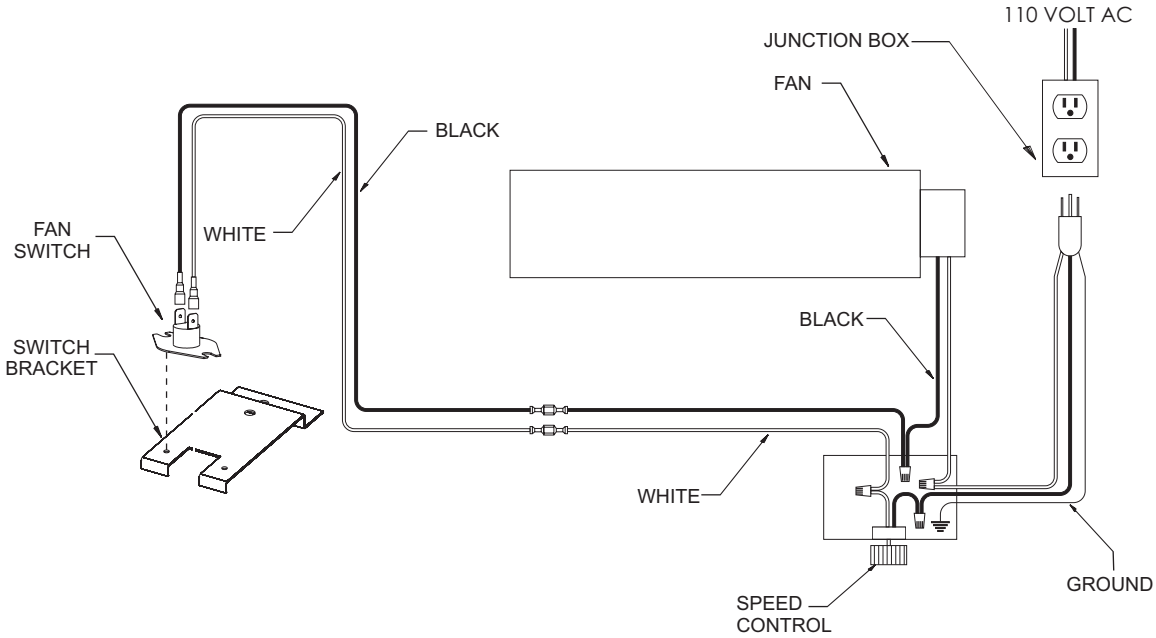

FBBX Wiring Diagram

FBB4 OPTIONAL VARIABLE SPEED BLOWER

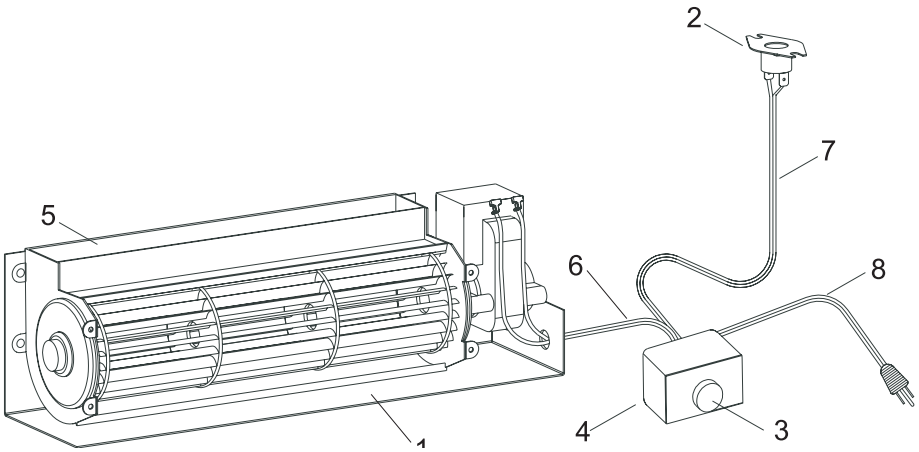

1	18858	Blower Base
2	R7649	Fan Control
3	R4192	Speed Control Knob
4	R4186	Speed Control
5	R7731	Blower
6	R7831	Blower Wire Harness
7	R7912	Fan Switch Wire Harness
8	R3529	Cordset

FPP26E OPTIONAL BRICK LINER KIT INSTALLATION INSTRUCTIONS

1. Remove screen from fireplace.
2. Remove branch log and rear log from burner assembly.
3. Insert back panel into firebox.
4. Insert one side panel into firebox.
5. Align clearance hole on brick panel bracket with screw hole in the left or right interior top of firebox. Use two 10 x 1/2" screws to attach brick panel bracket to interior, top of firebox.
6. Repeat steps 4 and 5 to install second side panel.
7. Replace rear log and branch log onto burner assembly.
8. Replace screen onto fireplace.
9. Installation of optional brick liner is complete.

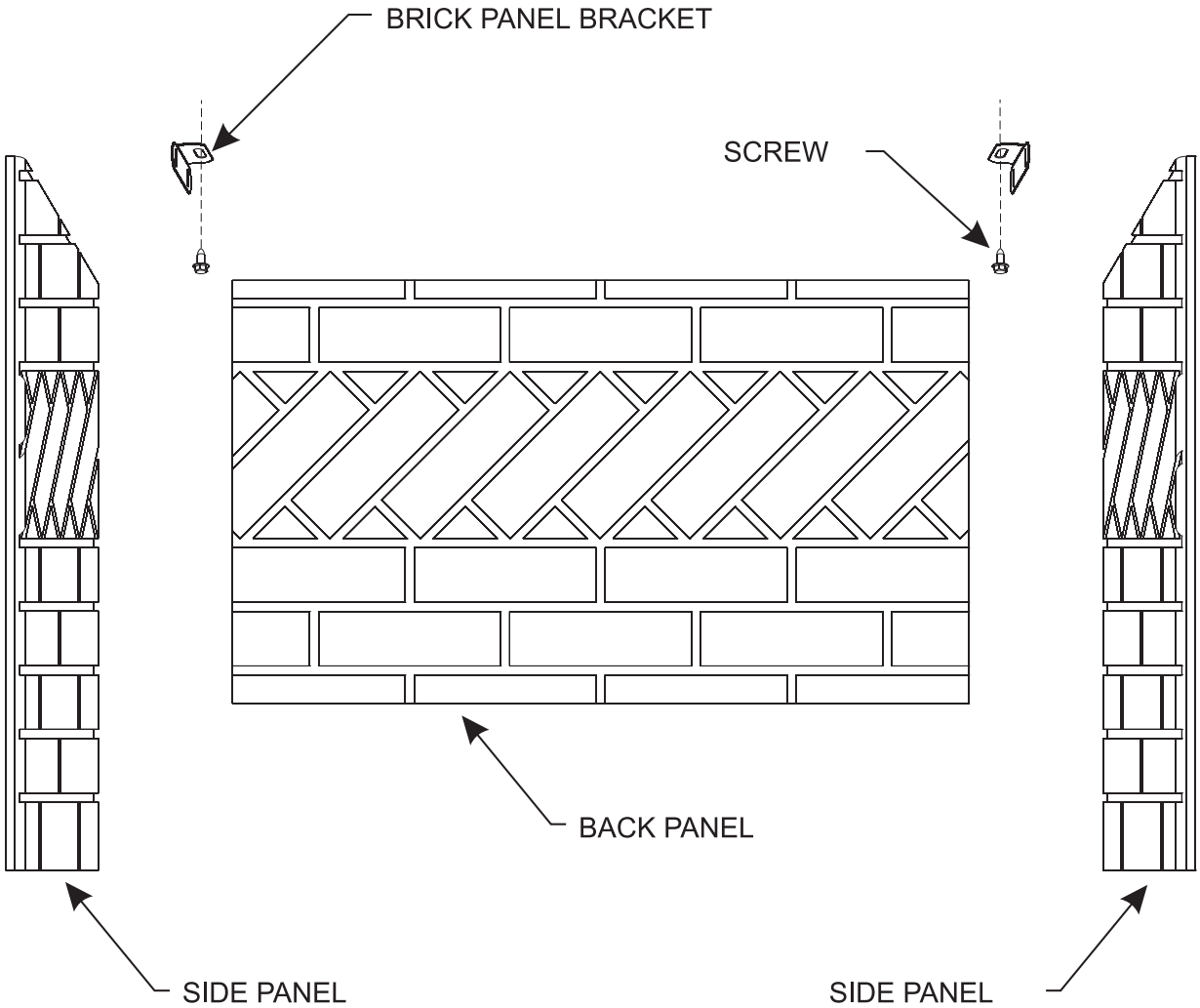

MASTER PARTS DISTRIBUTOR LIST

To Order Parts Under Warranty, please contact your local Empire dealer. See the dealer locator at www.empirecomfort.com. To provide warranty service, your dealer will need your name and address, purchase date and serial number, and the nature of the problem with the unit.

To Order Parts After the Warranty Period, please contact your dealer or one of the Master Parts Distributors listed below. This list changes from time to time. For the current list, please click on the Master Parts button at www.empirecomfort.com. Please note: Master Parts Distributors are independent businesses that stock the most commonly ordered Original Equipment repair parts for Heaters, Grills, and Fireplaces manufactured by Empire Comfort Systems Inc.

Dey Distributing
1401 Willow Lake Boulevard
Vadnais Heights, MN 55101

Phone: 651-490-9191
Toll Free: 800-397-1339
Website: www.deydistributing.com
Parts: Heater, Hearth and Grills

F. W. Webb Company
200 Locust Street
Hartford, CT 06114

Phone: 860-722-2433
Toll Free: 800-243-9360
Fax: 860-293-0479
Toll Free Fax: 800-274-2004
Websites: www.fwwebb.com & www.victormfg.com
Parts: Heater, Hearth and Grills

East Coast Energy Products
10 East Route 36
West Long Branch, NJ 07764

Phone: 732-870-8809
Toll Free: 800-755-8809
Fax: 732-870-8811
Website: www.eastcoastenergy.com
Parts: Heater, Hearth and Grills

HOW TO ORDER REPAIR PARTS

Parts Not Under Warranty

Parts can be ordered through your Service Person, Dealer, or a Master Parts Distributor. See this page for the Master Parts Distributors list. For best results, the **service person or dealer** should order parts through the distributor. Parts can be shipped directly to the **service person/dealer**.

Warranty Parts

Warranty parts will need a proof of purchase and can be ordered by your Service Person or Dealer. Proof of purchase is **required** for warranty parts.

All parts listed in the Parts List have a Part Number. When ordering parts, first obtain the Model Number and Serial Number from the name plate on your equipment. Then determine the Part Number (**not** the Index Number) and the Description of each part from the following illustration and part list. Be sure to give all this information . . .

Appliance Model Number _____ Part Description _____

Appliance Serial Number _____ Part Number _____

Type of Gas (Propane or Natural) _____

Do not order bolts, screws, washers or nuts. They are standard hardware items and can be purchased at any local hardware store.

Shipments contingent upon strikes, fires and all causes beyond our control.

WARRANTY

Empire Comfort Systems Inc. warranties this hearth product to be free from defects at the time of purchase and for the periods specified below. Hearth products must be installed by a qualified technician and must be maintained and operated safely, in accordance with the instructions in the owner's manual. This warranty applies to the original purchaser only and is not transferable. All warranty repairs must be accomplished by a qualified gas appliance technician.

Limited Lifetime Parts Warranty with a Five-Year Limited Labor Warranty – Combustion Chamber and Heat Exchanger

If the combustion chamber or heat exchanger (see parts list) fails because of defective workmanship or material, Empire will repair or replace at Empire's option. Within five years from the date of purchase, Empire will pay reasonable labor to have the defective part repaired or replaced at Empire's option.

Limited Five-Year Parts & Labor Warranty – All Other Components
(Except Remote Controls, Thermostats, Accessories and Replacement Parts)

Should any part fail because of defective workmanship or material within five years from the date of purchase, Empire will repair or replace at Empire's option. Within five years from the date of purchase, Empire will pay reasonable labor to have that defect repaired at Empire's option.

Limited One-Year Parts Warranty – Remote Controls, Thermostats, Accessories, and Parts

Should any remote control, thermostat, accessory, or other part fail because of defective workmanship within one year from the date of purchase, Empire will repair or replace at Empire's option.

Duties Of The Owner

The appliance must be installed by a qualified installer and operated in accordance with the instructions furnished with the appliance. A bill of sale, cancelled check, or payment record should be kept to verify purchase date and establish warranty period. Ready access to the appliance for service.

What Is Not Covered

Damages that might result from the use, misuse, or improper installation of this appliance.
Travel, diagnostic costs and freight charges on warranted parts to and from the factory.
Claims that do not involve defective workmanship or materials.
Unauthorized service or parts replacements.
Removal and reinstallation cost.
Inoperable due to improper or lack of maintenance.

How To Get Service

To make a claim under this warranty, please have your receipt available and contact your installing dealer. Provide the dealer with the model number, serial number, type of gas, and purchase verification. The installing dealer is responsible for providing service and will contact the factory to initiate any warranted parts replacements. Empire will make replacement parts available at the factory. Shipping expenses are not covered.
If, after contacting your Empire dealer, service received has not been satisfactory, contact: Consumer Relations Department, Empire Comfort Systems Inc., PO Box 529, Belleville, Illinois 62222, or send an e-mail to info@empirecomfort.com with "Consumer Relations" in the subject line.

Your Rights Under State Law

This warranty gives your specific legal rights, and you may also have other rights, which vary from state to state.

APPLIANCE SERVICE HISTORY

Date	Dealer Name	Service Technician Name	Service Performed/Notes

APPLIANCE SERVICE HISTORY

Date	Dealer Name	Service Technician Name	Service Performed/Notes

Empire Comfort Systems Inc.
Belleville, IL

If you have a general question about our products, please e-mail us at info@empirecomfort.com.

If you have a service or repair question, please contact your dealer.

www.empirecomfort.com