This Owner's Manual is provided and hosted by Appliance Factory Parts.

Appliance Factory Parts
Experts in BBQ, Humidifier, & Appliance Parts
1-800-955-7075

EMPIRE VFD10CC70BP Owner's Manual

Shop genuine replacement parts for EMPIRE VFD10CC70BP

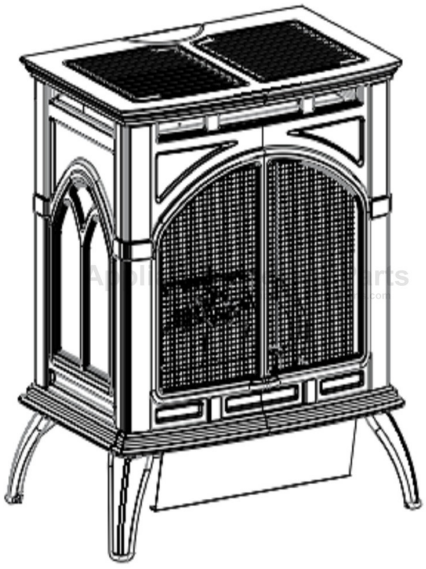

Find Your EMPIRE Fireplace Parts - Select From 642 Models

-------- Manual continues below --------

EMPIRE
Cast Iron Stoves

INSTALLATION INSTRUCTIONS AND OWNER'S MANUAL

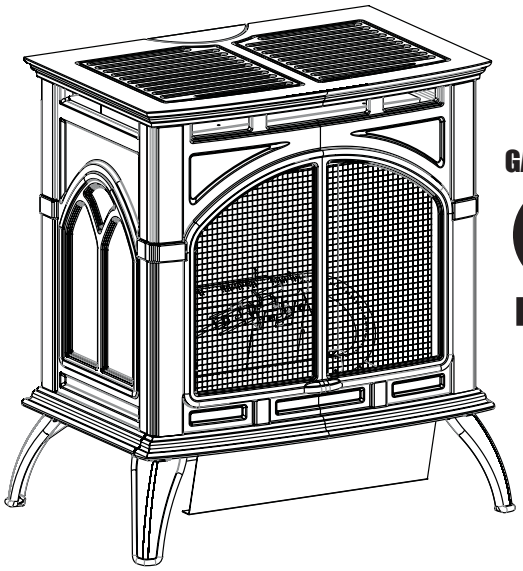

GAS-FIRED
UL
LISTED

CAST IRON UNVENTED ROOM HEATER MODELS:

SMALL	MEDIUM
VFD(10,20)CC(30,70) (B,F,M)(N,P)-1	VFD30CC(30,70) (B,F,M,S,W)(N,P)-1

⚠ WARNING

If not installed, operated and maintained in accordance with the manufacturer's instructions, this product could expose you to substances in fuel or from fuel combustion which can cause death or serious illness.

This is an unvented gas-fired heater. It uses air (oxygen) from the room in which it is installed. Provisions for adequate combustion and ventilation air must be provided. Refer to page 7.

WATER VAPOR: A BY-PRODUCT OF UNVENTED ROOM HEATERS
Water vapor is a by-product of gas combustion. An unvented room heater produces approximately one (1) ounce (30ml) of water for every 1,000 BTU's (.3KW's) of gas input per hour. Refer to page 6.

This appliance may be installed in an after-market, permanently located, manufactured (mobile) home, where not prohibited by local codes.
This appliance is only for use with the type of gas indicated on the rating plate. This appliance is not convertible for use with other gases.

INSTALLER:

Leave this manual with the appliance.

CONSUMER:

Retain this manual for future reference.

⚠ WARNING

FIRE OR EXPLOSION HAZARD
Failure to follow safety warnings exactly could result in serious injury, death or property damage.

- **Do not store or use gasoline or other flammable vapors and liquids in the vicinity of this or any other appliance.**
- **WHAT TO DO IF YOU SMELL GAS**
  - **Do not try to light any appliance.**
  - **Do not touch any electrical switch; do not use any phone in your building.**
  - **Leave the building immediately.**
  - **Immediately call your gas supplier from a neighbor's phone. Follow the gas supplier's instructions.**
  - **If you cannot reach your gas supplier, call the fire department.**
- **Installation and service must be performed by a qualified installer, service agency or the gas supplier.**

NATIONAL FIREPLACE INSTITUTE®
NFI
CERTIFIED
www.nficertified.org

We suggest that our gas hearth products be installed and serviced by professionals who are certified in the U.S. by the National Fireplace Institute® (NFI) as NFI Gas Specialists.

TABLE OF CONTENTS

SECTION	PAGE
IMPORTANT SAFETY INFORMATION	3
SAFETY INFORMATION FOR USERS OF PROPANE GAS	4
INTRODUCTION	5
SPECIFICATIONS	6
WATER VAPOR: A BY-PRODUCT OF UNVENTED ROOM HEATERS	6-7
GAS SUPPLY	8
CLEARANCES	9
LOG IDENTIFICATION	10
LOG PLACEMENT	11-18
PLACEMENT OF GLOWING EMBERS (ROCK WOOL)	19
OPERATION INSTRUCTIONS/FLAME APPEARANCE	19
OPERATING GUIDELINES	20
MILLIVOLT LIGHTING INSTRUCTIONS	21
10,000 BTU MILLIVOLT LIGHTING INSTRUCTIONS	22
PILOT FLAME CHARACTERISTICS	23-24
MILLIVOLT WIRING	25-26
MILLIVOLT TROUBLESHOOTING	27-28
IP OPERATING INSTRUCTIONS	29
IP WIRING	30
IP LIGHTING INSTRUCTIONS	31
IP TROUBLESHOOTING	32-34
MAIN BURNER FLAME CHARACTERISTICS	35
MAINTENANCE	36
PARTS LIST - VFD10CC(30,70)	37
PARTS VIEW - VFD10CC(30,70)	38
PARTS LIST - VFD20CC(30,70)	39
PARTS VIEW - VFD20CC(30,70)	40
PARTS LIST - VFD30CC(30,70)	41
PARTS VIEW - VFD30CC(30,70)	42
CASTING PARTS LIST - VFD(10,20,30)CC(30,70)	43
CASTING PARTS VIEW - VFD(10,20,30)CC(30,70)	44
MASTER PARTS DISTRIBUTOR LIST	45
HOW TO ORDER REPAIR PARTS	45
ACCESSORY SIDE SHELVES INSTALLATION INSTRUCTIONS	46
OPTIONAL STONE INLAY INSTALLATION INSTRUCTIONS	46
CIB4-1 OPTIONAL BLOWER INSTALLATION INSTRUCTIONS	47-48
CIB3-1 OPTIONAL BLOWER INSTALLATION INSTRUCTIONS	49-50
WARRANTY	51
APPLIANCE SERVICE HISTORY	52-53
QUICK REFERENCE GUIDE	54-55

IMPORTANT SAFETY INFORMATION

THIS IS A HEATING APPLIANCE

DO NOT OPERATE THIS APPLIANCE WITHOUT FRONT PANEL INSTALLED.

⚠ **DANGER**: Indicates a hazardous situation which, if not avoided, will result in death or serious injury.

⚠ **WARNING**: Indicates a hazardous situation which, if not avoided, could result in death or serious injury.

⚠ **CAUTION**: Indicates a hazardous situation which, if not avoided, could result in minor or moderate injury.

NOTICE: Addresses practices not related to personal injury.

- **An unvented room heater having an input rating of more than 6,000 Btu per hour shall not be installed in a bathroom**
- **An unvented room heater having an input rating of more than 10,000 Btu per hour shall not be installed in a bedroom or bathroom.**
- **Due to high temperatures, the appliance should be located out of traffic and away from furniture and draperies.**
- **Children and adults should be alerted to the hazard of high surface temperature and should stay away to avoid burns or clothing ignition.**
- **Young children should be carefully supervised when they are in the same room with the appliance.**
- **Do not place clothing or other flammable material on or near the appliance.**
- **Avoid the use of scented air fresheners (plug in type air fresheners, etc.) while the log set is in operation. Air fresheners produce a residue in the air similar to candles and may produce a soot like substance.**
- **Avoid the use of scented or decorative candles while the log set is in operation. Candles produce a residue in the air that creates a soot like substance. Burning candles while the log set is operating magnifies the problem. It should be noted that candles, in general, produce soot. The amount of time burned and the quantity of candles burned will determine the amount of soot produced and deposited.**
- **Installation and repair should be done by a QUALIFIED SERVICE PERSON. This appliance should be inspected before use and at least annually by a professional service person. More frequent cleaning may be required due to excessive lint from carpeting, bedding materials, etc. It is imperative that control compartments, burners and circulating air passageways of the appliance be kept clean.**
- **DO NOT use this room heater if any part has been under water. Immediately call a qualified service technician to inspect the room heater and to replace any part of the control system and any gas control which has been under water.**
- **You must operate heater with fireplace screen in place.**
- **Do not place trash, logs or other articles on the log set during operation.**
- **During manufacturing, fabricating and shipping, various components of this appliance are treated with certain oils, films or bonding agents. These bonding agents are not harmful but may produce annoying smoke and smells as they are burned off during initial operation of the appliance. This is a normal temporary occurrence. A window should be opened during the initial bake out period.**
- **Correct installation of the ceramic fiber logs, proper location of the heater and annual cleaning are necessary to avoid potential problems with sooting. Sooting, resulting from improper installation or operation, can settle on surfaces outside the fireplace. See instructions for proper installation.**
- ⚠ **WARNING: Do not allow fans to blow directly into the fireplace. Avoid any drafts that alter burner flame patterns.**
- ⚠ **WARNING: Do not use a blower insert, heat exchanger insert or other accessory not approved for use with this heater.**
- ⚠ **WARNING! This fireplace needs fresh air for ventilation to run properly. This fireplace has an ODS (oxygen depletion sensor) which will shut down the heater if adequate fresh air is not available. See troubleshooting section in the instructions.**
- ⚠ **WARNING: DO NOT operate this appliance unless all components including logs, burners, and controls are in good working condition. Never operate this appliance if any log or twig is broken, or out of their intended position. Refer to the Log set placement instructions for correct log and twig positioning.**
  Replacement components are available through your local dealer as indicated in the How to Order Repair Parts section of the appliance manual.
- **Keep appliance area clear and free from combustible materials, gasoline and other flammable vapors and liquids.**
- ⚠ **WARNING: Failure to keep the primary air opening(s) of the burner(s) clean may result in sooting and property damage.**

⚠ WARNING

When used without adequate combustion and ventilation air, heater may give off CARBON MONOXIDE, an odorless, poisonous gas.

Do not install heater until all necessary provisions are made for combustion and ventilation air. Consult the written instructions provided with the heater for information concerning combustion and ventilation air. In the absence of instructions, refer to the National Fuel Gas Code, ANSI Z223.1/NFPA 54, Air for Combustion and Ventilation, or applicable local codes.

This heater is equipped with a PILOT LIGHT SAFETY SYSTEM designed to turn off the heater if not enough fresh air is available.

DO NOT TAMPER WITH PILOT LIGHT SAFETY SYSTEM!

If heater shuts off, do not relight until you provide fresh air.

If heater keeps shutting off, have it serviced. Keep burner and control compartment clean.

CARBON MONOXIDE POISONING MAY LEAD TO DEATH.

Early signs of carbon monoxide poisoning resemble the flu, with headache, dizziness and/or nausea. If you have these signs, heater may not be working properly. Get fresh air at once! Have heater serviced.

Some people — pregnant women, persons with heart or lung disease, anemia, those under the influence of alcohol , those at high altitudes — are more affected by carbon monoxide than others.

The pilot light safety system senses the depletion of oxygen at its location. If this heater is installed in a structure having a high vertical dimension, the possibility exists that the oxygen supply at the higher levels will be less than that at the heater. In this type of application, a fan to circulate the structure air will minimize this effect. The use of this fan will also improve the comfort level in the structure. When a fan is used to circulate air, it should be located so that the air flow is not directed at the burner.

SAFETY INFORMATION FOR USERS OF PROPANE GAS

Propane is a flammable gas which can cause fires and explosions. In its natural state, propane is odorless and colorless. You may not know all the following safety precautions which can protect both you and your family from an accident. Read them carefully now, then review them point by point with the members of your household. Someday when there may not be a minute to lose, everyone's safety will depend on knowing exactly what to do. If, after reading the following information, you feel you still need more information, please contact your gas supplier.

PROPANE GAS WARNING ODOR

If a gas leak happens, you should be able to smell the gas because of the odorant put in the Propane Gas. That's your signal to go into immediate action!

- Do not operate electric switches, light matches, use your phone. Do not do anything that could ignite the gas.
- Get everyone out of the building, vehicle, trailer, or area. Do that IMMEDIATELY.
- Close all gas tank or cylinder supply valves.
- Propane Gas is heavier than air and may settle in low areas such as basements. When you have reason to suspect a gas leak, keep out of basements and other low areas. Stay out until firefighters declare them to be safe.
- Use your neighbor's phone and call a trained Propane Gas service person and the fire department. Even though you may not continue to smell gas, do not turn on the gas again. Do not re-enter the building, vehicle, trailer, or area.
- **Finally,** let the service man and firefighters check for escaped gas. Have them air out the area before you return. Properly trained Propane Gas service people should repair the leak, then check and relight the gas appliance for you.

NO ODOR DETECTED - ODOR FADE

Some people cannot smell well. Some people cannot smell the odor of the chemical put into the gas. You must find out if you can smell the odorant in propane. Smoking can decrease your ability to smell. Being around an odor for a time can affect your sensitivity or ability to detect that odor. Sometimes other odors in the area mask the gas odor. People may not smell the gas odor or their minds are on something else. Thinking about smelling a gas odor can make it easier to smell.

The odorant in Propane Gas is colorless, and it can fade under some circumstances. For example, if there is an underground leak, the movement of the gas through soil can filter the odorant. Odorants in Propane Gas also are subject to oxidation. This fading can occur if there is rust inside the storage tank or in iron gas pipes.

The odorant in escaped gas can adsorb or absorb onto or into walls, masonry and other materials and fabrics in a room. That will take some of the odorant out of the gas, reducing its odor intensity.

Propane Gas may stratify in a closed area, and the odor intensity could vary at different levels. Since it is heavier than air, there may be more odor at lower levels. Always be sensitive to the slightest gas odor. If you detect any odor, treat it as a serious leak. Immediately go into action as instructed earlier.

SOME POINTS TO REMEMBER

- **Learn to recognize the odor of Propane Gas.** Your local Propane Gas Dealer can give you a "Scratch and Sniff" pamphlet. Use it to find out what the propane odor smells like. If you suspect that your Propane Gas has a weak or abnormal odor, call your Propane Gas Dealer.
- If you are not qualified, do not light pilot lights, perform service, or make adjustments to appliances on the Propane Gas system. If you are qualified, consciously think about the odor of Propane Gas prior to and while lighting pilot lights or performing service or making adjustments.
- Sometimes a basement or a closed-up house has a musty smell that can cover up the Propane Gas odor. Do not try to light pilot lights, perform service, or make adjustments in an area where the conditions are such that you may not detect the odor if there has been a leak of Propane Gas.
- Odor fade, due to oxidation by rust or adsorption on walls of new cylinders and tanks, is possible. Therefore, people should be particularly alert and careful when new tanks or cylinders are placed in service. Odor fade can occur in new tanks, or reinstalled old tanks, if they are filled and allowed to set too long before refilling. Cylinders and tanks which have been out of service for a time may develop internal rust which will cause odor fade. If such conditions are suspected to exist, a periodic sniff test of the gas is advisable. **If you have any question about the gas odor, call your Propane Gas Dealer. A periodic sniff test of the Propane Gas is a good safety measure under any condition.**
- If, at any time, you do not smell the Propane Gas odorant and you think you should, assume you have a leak. Then take the same immediate action recommended above for the occasion when you do detect the odorized Propane Gas.
- If you experience a complete "gas out," (the container is under no vapor pressure), turn the tank valve off immediately. If the container valve is left on, the container may draw in some air through openings such as pilot light orifices. If this occurs, some new internal rusting could occur. If the valve is left open, then treat the container as a new tank. Always be sure your container is under vapor pressure by turning it off at the container before it goes completely empty or having it refilled before it is completely empty.

INTRODUCTION

Always consult your local Building Department regarding regulations, codes or ordinances which apply to the installation of an unvented room heater.

This appliance may be installed in an aftermarket* permanently located, manufactured (mobile) home, where not prohibited by state or local codes.

Instructions to Installer

1. Installer must leave instruction manual with owner after installation.
2. Installer must have owner fill out and mail product registration card supplied with unvented room heater.
3. Installer should show owner how to start and operate unvented room heater.

This product is design certified in accordance with American National Standards Institute Z21.11.2 by Underwriters Laboratories (UL) as an Unvented Room Heater and should be installed according to these instructions.

*Aftermarket: Completion of sale, not for purpose of resale, from the manufacturer.

Well Head Gas Installations

Some Natural Gas utilities use “well head” gas. This may affect the Btu output of the unit and promote sooting. Units shall not be converted to use well head gas.

This appliance is only for use with the type of gas indicated on the rating plate. This appliance is not convertible for use with other gases.

⚠ WARNING

This appliance is equipped for (Natural or Propane) Gas. Field conversion is not permitted.

NOTICE: Remove screw in valve cover. Screw is required to prevent shipping damage.

Attention: During initial use of ceramic log you will detect an odor as the ceramic log is cured.

Any alteration of the original design, installed other than as shown in these instructions or use with a type of gas not shown on the rating plate is the responsibility of the person and company making the change. Do not operate this appliance unless all components including logs, burners, and controls are in good working condition. Never operate this appliance if any log or twig is broken, or out of their intended position. Refer to Log Placement on pages 10 - 11 for correct log and twig positioning.

Replacement parts are available through your local dealer as indicated in the Parts Sections on pages 30 through 37.

⚠ WARNING

This unit is not for use with solid fuels.

Important

All correspondence should refer to complete Model Number, Serial Number and type of gas.

NOTICE: During initial firing of this unit, its paint will bake out, and smoke may occur. To prevent triggering of smoke alarms, ventilate the room in which the unit is installed.

Installation in Residential Garages

Gas utilization equipment in residential garages shall be installed so that all burners and burner ignition devices are located not less than 18" (457 mm) above the floor.

Such equipment shall be located, or protected, so it is not subject to physical damage by a moving vehicle.

Preparation

This vent free gas fireplace and its components are tested and safe when installed in accordance with this Installation Manual. Report to your dealer any parts damaged in shipment, specifically check log placement. Do not install unit with damaged, incomplete, or substitute parts. Read all instructions before starting installation and follow these instructions carefully during installation to insure maximum benefit and safety. Failure to follow them will void your warranty and may present a fire hazard.

The warranty will be voided by, and the warranter disclaims any responsibility for the following actions:

- Installation of any damaged fireplace.
- Modification of the fireplace.
- Installation other than as instructed by Empire Comfort Systems Inc.
- Improper positioning of the logs.
- Installation and/or use of any component part not manufactured or approved by manufacturer.

Qualified Installing Agency

Installation and replacement of gas piping, gas utilization equipment or accessories and repair and servicing of equipment shall be performed only by a qualified agency. The term "qualified agency" means any individual, firm, corporation or company which either in person or through a representative is engaged in and is responsible for (a) the installation or replacement of gas piping or (b) the connection, installation, repair or servicing of equipment, who is experienced in such work, familiar with all precautions required and has complied with all the requirements of the authority having jurisdiction.

Commonwealth of Massachusetts: The installation must be made by a licensed plumber or gas fitter in the Commonwealth of Massachusetts.

Sellers of unvented Propane or Natural Gas-fired supplemental room heaters shall provide to each purchaser a copy of 527 CMR 30 upon sale of the unit. In the Commonwealth of Massachusetts, unvented Propane or Natural Gas-fired space heaters shall be prohibited in bedrooms and bathrooms.

The installation must conform with local codes or, in the absence of local codes, with the *National Fuel Gas Code, ANSI Z223.1/NFPA 54.** **Available from the American National Standards Institute, Inc., 11 West 42nd St., New York, N.Y. 10036.*

⚠ WARNING

Any change to this fireplace or its controls can be dangerous.

Improper installation or use of the fireplace can cause serious injury or death from fire, burns, explosions, or carbon monoxide poisoning.

Any alteration of the original design, installed other than shown in these instructions or use with a type of gas not shown on the rating plate is the responsibility of the person and company making the change.

SPECIFICATIONS

Model	VFD10CC
Input BTU/HR (KW/H) Maximum	10,000
Input BTU/HR (KW/H) Minimum	10,000
Height	24 1/8" (612.8 mm)
Width	21 1/2" (546.1 mm)
Depth	15 3/8" (390.5 mm)
Gas Inlet	3/8" (9.5 mm)
Air Shutter Setting (Natural)	1/16"
Air Shutter Setting (Propane)	1/4"
Model	**VFD20CC**
Input BTU/HR (KW/H) Maximum (Propane)	20,000
Input BTU/HR (KW/H) Minimum (Propane)	16,000
Input BTU/HR (KW/H) Maximum (Natural)	20,000
Input BTU/HR (KW/H) Minimum (Natural)	14,500
Height	24 1/8" (612.8 mm)
Width	21 1/2" (546.1 mm)
Depth	15 3/8" (390.5 mm)
Gas Inlet	3/8" (9.5 mm)
Air Shutter Setting (Natural)	1/8"
Air Shutter Setting (Propane)	3/8"
Model	**VFD30CC**
Input BTU/HR (KW/H) Maximum (Propane)	25,000
Input BTU/HR (KW/H) Minimum (Propane)	21,000
Input BTU/HR (KW/H) Maximum (Natural)	25,000
Input BTU/HR (KW/H) Minimum (Natural)	17,500
Height	27 3/4" (704.9 mm)
Width	28 1/16" (712.8 mm)
Depth	17 1/8" (435.0 mm)
Gas Inlet	3/8" (9.5 mm)
Air Shutter Setting (Natural)	1/16"
Air Shutter Setting (Propane)	7/16"

Accessories		
FRBC	Battery Operated Remote Control	
FRBTC	Battery Operated Remote Control w/Thermostat	
FRBTP	7-Day Programmable Remote	
FREC	Electric Remote Control	
FWS	Wall Switch	
TMV	Millivolt Wall Thermostat - Reed Switch	
TRW	Remote Wall Thermostat	
CIB4	Automatic Blower (VFD(10,20)CC Units)	
CIB3	Automatic Blower (VFD30CC Units)	
Stone Inlay Replaces Standard Grill Top (Medium Units Only)		
CSI-8V	Stone Inlay	Venetian Gold
CSI-9A	Stone Inlay	Adobe Frost
CSI-10M	Stone Inlay	Patina Mocha
CSI-11G	Stone Inlay	Temple Gray
CSI-12A	Stone Inlay	American Beauty

Accessories			
Model	Description	Available on Models	
		VFD(10,20)CC	VFD30CC
CSK-B	Side Shelf Porcelain Black	X	X
CSK-F	Side Shelf Matte Black	X	X
CSK-M	Side Shelf Porcelain Mahogany	X	X
CSK-S	Side Shelf Porcelain Sand		X
CSK-W	Side Shelf Matte Pewter		X

WATER VAPOR: A BY-PRODUCT OF UNVENTED ROOM HEATERS

Water vapor is a by-product of gas combustion. An unvented room heater produces approximately one ounce (30 ml) of water for every 1,000 BTU's (.3KW's) of gas input per hour.

Unvented room heaters must be used as supplemental heat (a room) rather than a primary heat source (an entire house). In most supplemental heat applications, the water vapor does not create a problem. In most applications, the water vapor enhances the low humidity atmosphere experienced during cold weather.

The following Steps will help insure that water vapor does not become a problem.

1. Be sure the heater is sized properly for the application, including ample combustion air and circulation air.
2. If high humidity is experienced, a dehumidifier may be used to help lower the water vapor content of the air.
3. Do not use an unvented room heater as the primary heat source (an entire house).

PROVISIONS FOR ADEQUATE COMBUSTION & VENTILATION AIR

This heater shall not be installed in a confined space or unusually tight construction unless provisions are provided for adequate combustion and ventilation air.

A confined space is an area with volume less than 50 cubic feet per 1,000 Btuh of the combined input rates of all appliances drawing combustion air from that space. Small areas such as equipment rooms are confined spaces. Furnaces installed in a confined space which supply heated air to areas outside the space must draw return air from outside the space through tightly sealed return air ducts. A confined space must have 2 openings into the space for combustion air. One opening must be within 12 inches of the ceiling and the other must be within 12 inches of the floor. The required sizing of these openings is determined by whether inside or outside air is used to support combustion, the method by which the air is brought to the space (vertical or horizontal duct) and by the total input rate of all appliances in the space.

The following example is for determining the volume of a typical area in which the VFD30 may be located and for determining if this area fits the definition of an unconfined space.

The maximum input of the VFD30 is 25,000 Btu per hour. Based on the 50 cubic feet per 1,000 Btu per hour formula, the **minimum** area that is an unconfined space for installation of the VFD30 is 1,250 cubic feet, 50 cubic feet x 25 = 1,250 cubic feet. To determine the cubic feet of the area in which the VFD30 is to be installed, measure the length, width and height of the area. Example: The area measures 16 feet in length, 10 feet in width and 8 feet in height, the area is 1,280 cubic feet. The VFD30 can be installed in this unconfined space with no requirement to provide additional combustion and ventilation air.

⚠ WARNING

If the area in which the heater may be operated is smaller than that defined as an unconfined space or if the building is of unusually tight construction, provide adequate combustion and ventilation air by one of the methods described in the or applicable local codes.

Unusually Tight Construction

The air that leaks around doors and windows may provide enough fresh air for combustion and ventilation. However, in buildings of unusually tight construction, you must provide additional fresh air.

Unusually tight construction is defined as construction where:

a. Walls and ceilings exposed to the outside atmosphere have a continuous water vapor retarder with a rating of one perm or less with openings gasketed or sealed, and
b. Weather-stripping has been added on openable windows and doors, and
c. Caulking or sealants are applied to areas such as joints around window and door frames, between sole plates and floors, between wall-ceiling joints, between wall panels, at penetrations for plumbing, electrical, and gas lines, and at other openings.

If the VFD30 heater is installed in a building of unusually tight construction, adequate air for combustion, ventilation and dilution of flue gases shall be provided in accordance with ANSI Z223.1/NFPA54.

GAS SUPPLY

Check all local codes for requirements, especially for the size and type of gas supply line required.

Recommended Gas Pipe Diameter				
Pipe Length	Schedule 40 Pipe Inside Diameter		Tubing, Type L Outside Diameter	
	Natural	Propane	Natural	Propane
0-10 feet 0-3 meters	1/2” 12.7 mm	3/8” 9.5 mm	1/2” 12.7 mm	3/8” 9.5 mm
10-40 feet 4-12 meters	1/2” 12.7 mm	1/2” 12.7 mm	5/8” 15.9 mm	1/2” 12.7 mm
40-100 feet 13-30 meters	1/2” 12.7 mm	1/2” 12.7 mm	3/4” 19 mm	1/2” 12.7 mm
100-150 feet 31-46 meters	3/4” 19 mm	1/2” 12.7 mm	7/8” 22.2 mm	3/4” 19 mm

NOTICE: Never use plastic pipe. Check to confirm whether your local codes allow copper tubing or galvanized.

NOTICE: Since some municipalities have additional local codes, it is always best to consult your local authority and installation code.

Installing a New Main Gas Shut-Off

Each appliance should have its own manual gas shut-off.

A manual main gas shut-off should be located in the vicinity of the unit. Where none exists, or where its size or location is not adequate, contact your local authorized installer for installation or relocation.

Compounds used on threaded joints of gas piping shall be resistant to the action of liquefied petroleum gases. The gas lines must be checked for leaks by the installer. This should be done with a soap solution watching for bubbles on all exposed connections, and if unexposed, a pressure test should be made.

Never use an exposed flame to check for leaks. Appliance must be disconnected from piping at inlet of control valve and pipe capped or plugged for pressure test. Never pressure test with appliance connected; control valve will sustain damage!

A gas valve and ground joint union should be installed in the gas line upstream of the gas control to aid in servicing. It is required by the National Fuel Gas Code that a drip line be installed near the gas inlet. This should consist of a vertical length of pipe tee connected into the gas line that is capped on the bottom in which condensation and foreign particles may collect.

The use of the following gas connectors is recommended:

— ANS Z21.24 Appliance Connectors of Corrugated Metal Tubing and Fittings

— ANS Z21.45 Assembled Flexible Appliance Connectors of Other Than All-Metal Construction

The above connectors may be used if acceptable by the authority having jurisdiction The Commonwealth of Massachusetts requires that a flexible appliance connector cannot exceed three feet in length.

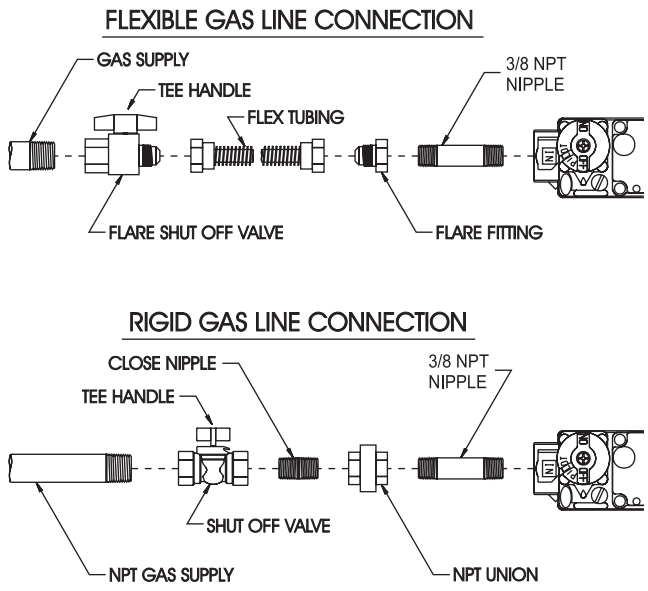

Figure 1

Pressure Testing of the Gas Supply System

1. To check the inlet pressure to the gas valve, a 1/8" (3 mm) N.P.T. plugged tapping, accessible for test gauge connection, must be placed immediately upstream of the gas supply connection to the appliance.
2. The appliance and its individual shut-off valve must be disconnected from the gas supply piping system during any pressure testing of that system at test pressures in excess of 1/2 psig (3.5 kPa).
3. The appliance must be isolated from the gas supply piping system by closing its individual manual shut-off valve during any pressure testing of the gas supply piping system at test pressures equal to or less than 1/2 psig (3.5 kPa).

⚠ WARNING

If one of the above procedures results in pressures in excess of 1/2 psig (14" w.c.) (3.5 kPa) on the appliance gas valve, it will result in a hazardous condition.

Checking Manifold Pressure

Natural Gas will have a manifold pressure of approximately 3.5" w.c. (.871 kPa) for maximum input or 1.7" w.c. (.423 kPa) for minimum input at the pressure regulator outlet with the inlet pressure to the pressure regulator from a minimum of 4.5" w.c. (1.245 kPa) for the purpose of input adjustment to a maximum of 10.5" w.c. (2.614 kPa). Propane Gas will have a manifold pressure approximately 10.0" w.c. (2.49 kPa) for maximum input or 6.3" w.c. (1.568 kPa) for minimum input at the pressure regulator outlet with the inlet pressure to the pressure regulator from a minimum of 11.0" w.c. (2.739 kPa) for the purpose of input adjustment to a maximum of 13.0" w.c. (3.237 kPa).

NOTICE: The gas control is equipped with a captured screw type pressure test point, therefore it is not necessary to provide a 1/8" test point up stream of the control.

A test gauge connection is located downstream of the gas appliance pressure regulator for measuring gas pressure. The connection is a 1/8 inch (3 mm) N.P.T. plugged tapping.

CLEARANCES

Clearances
When facing the front of the appliance the following minimum clearances to combustible construction must be maintained.

Top of appliance (ceiling)	36 inches
Rear Wall	2 inches
Side Wall	6 inches
Heater Corners (45° angle) to Wall	4 inches
Floor	0 inches

Provide adequate clearances around air openings.
Adequate accessibility clearances for purposes of servicing and proper operation must be provided.

Installation on Rugs and Tile
This appliance must be installed on a flat, solid, continuous surface (e.g. wood, metal, concrete). This may be the floor, or it may be raised up on a platform to enhance its visual impact. The continuous surface may be covered with carpeting, vinyl, wood flooring or other combustible material.

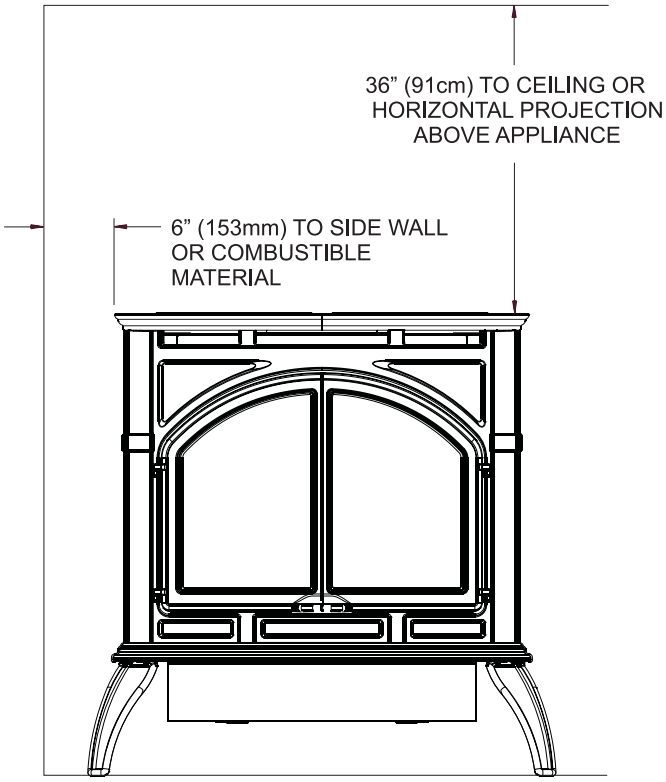

Figure 2

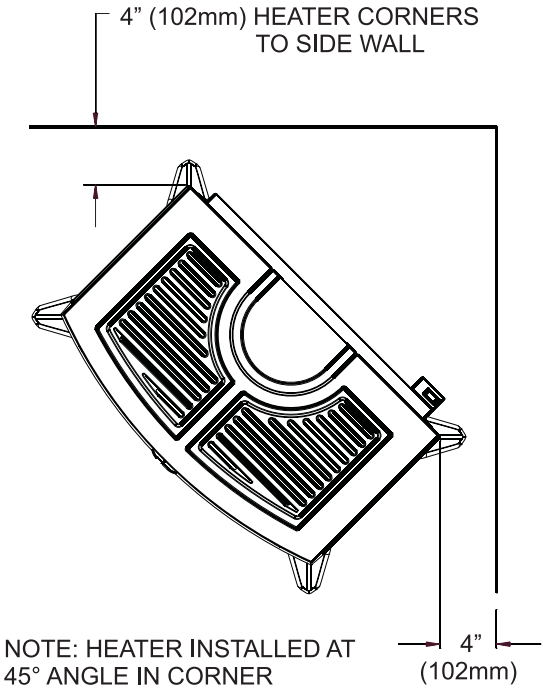

Figure 3

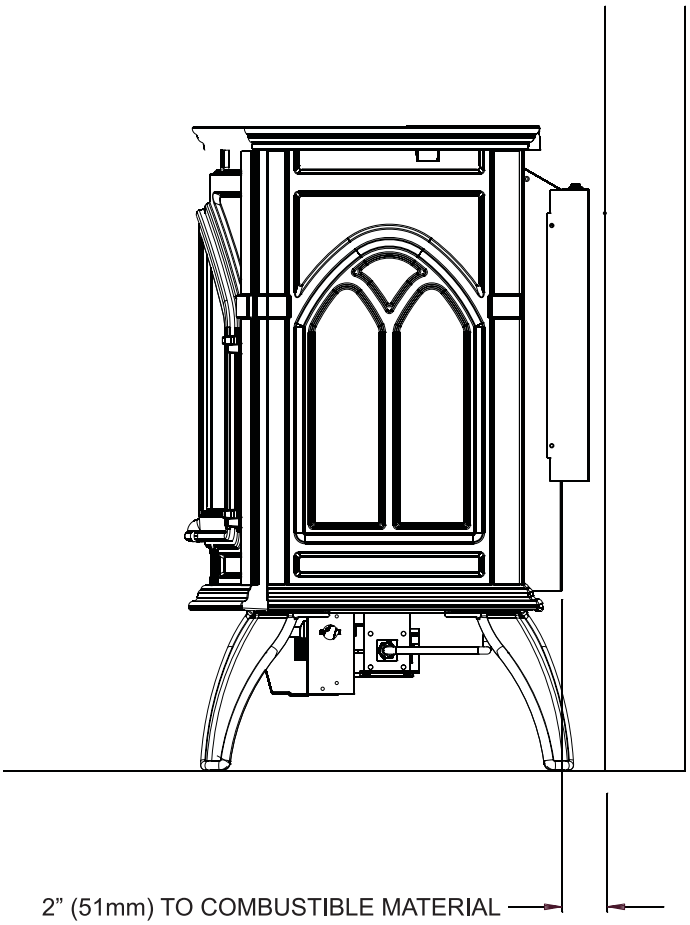

Figure 4

LOG IDENTIFICATION

Log Description	Part Number		Front View	Top View
	VFD(10,20)CC	VFD30CC		
Log A	29553	29546		
Log B	29554	29547		
Log C	29555	29548	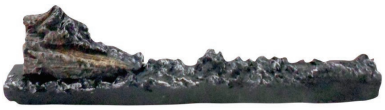	
Log D	29556	29549		
Log E	29558	29551		
Log F	29557	29550		

NOTE: Middle Top **Log (F)** is available as an optional log for the VFD10CC logsets. For more information, contact your Empire Dealer.

LOG PLACEMENT

⚠ CAUTION

Do not change the angle of the two Log Locating Tabs on the rear log shelf or the two Log Locating Tabs on the burner base. Doing so will cause misalignment of logs.

⚠ WARNING

Failure to position the parts in accordance with this diagram or failure to use only parts specifically approved with this heater may result in property damage or personal injury.

NOTE: For step by step log placement instructions with images, see pages 12-18.

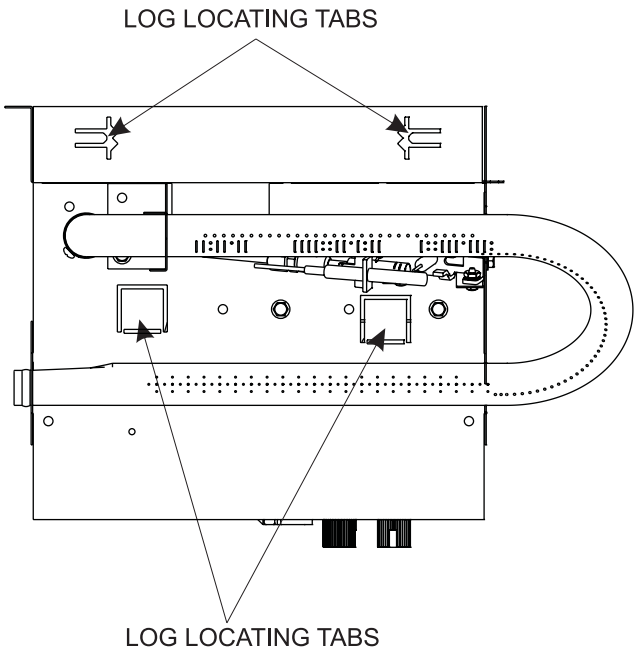

Figure 5 - Burner

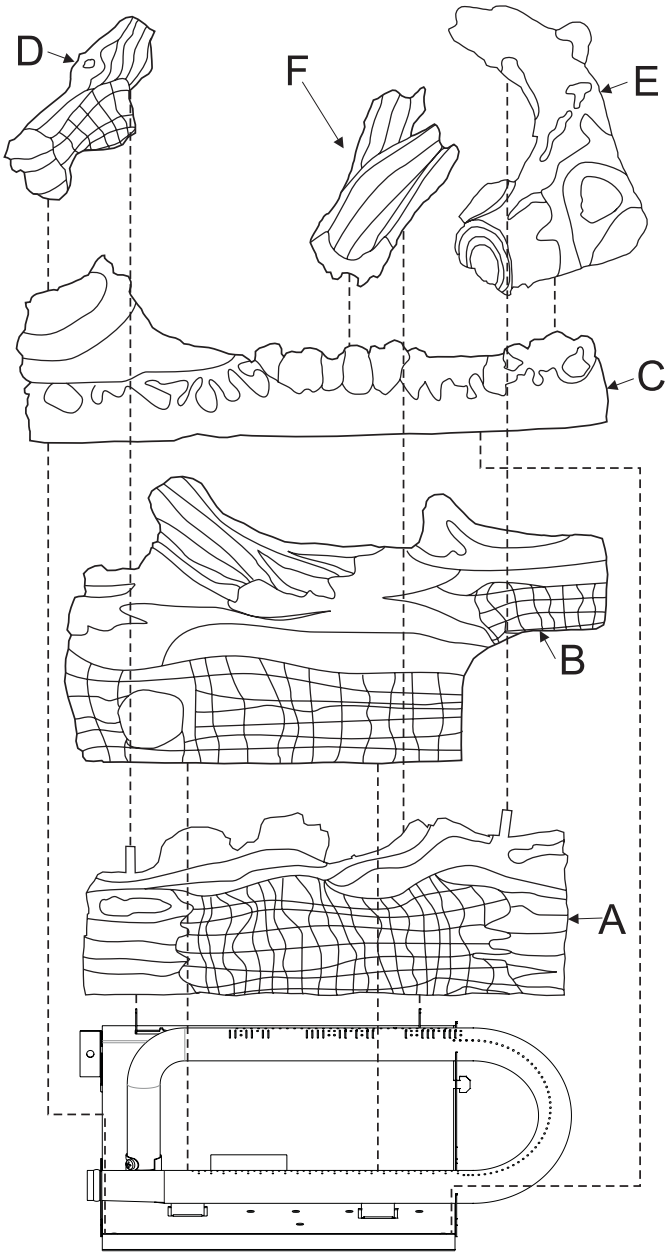

Figure 6 - Log Placement

Figure 7 - Completed Log Placement

LOG PLACEMENT

1. Place **Log A** onto the two Log Locating Tabs on the rear log shelf as shown below.

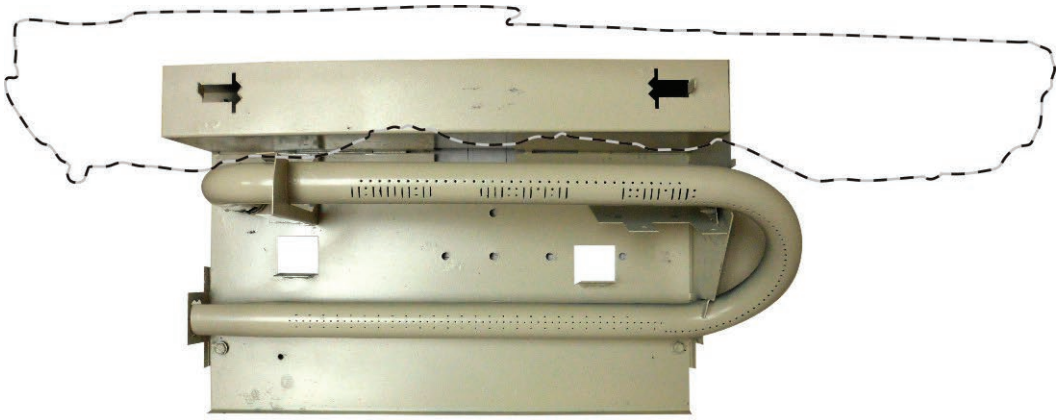

TOP VIEW

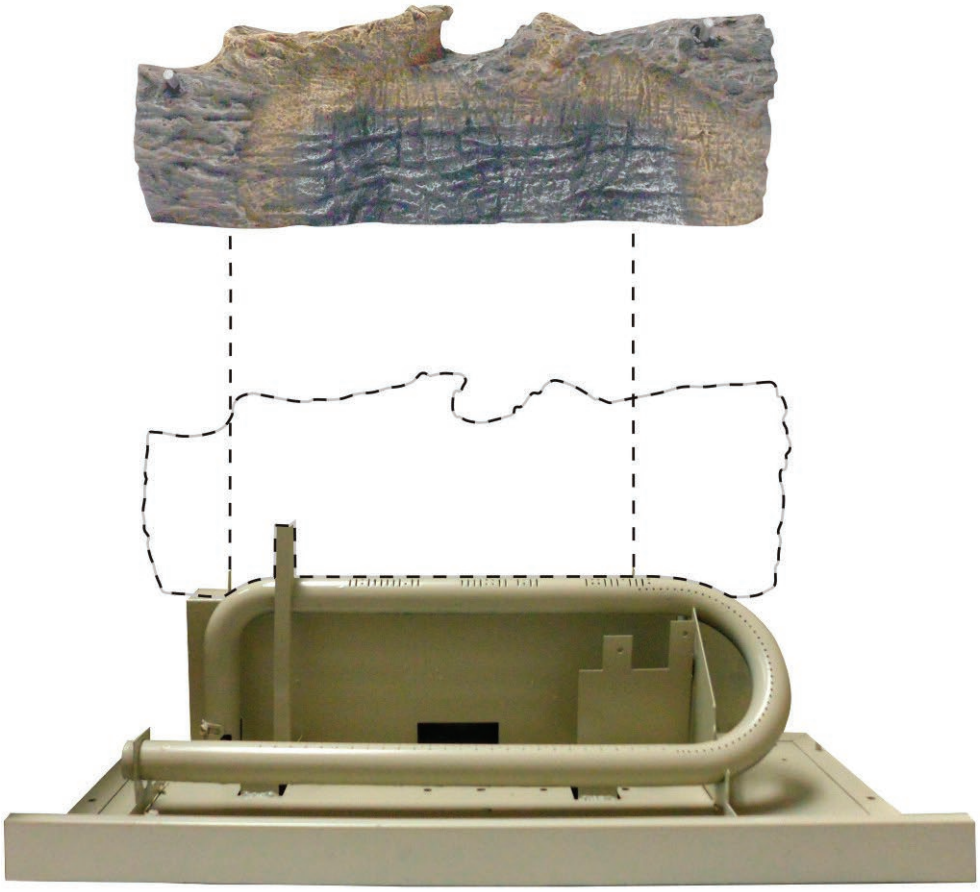

FRONT VIEW

LOG PLACEMENT

2. Place **Log B** behind the two Log Locating Tabs on the burner base as shown below.

TOP VIEW

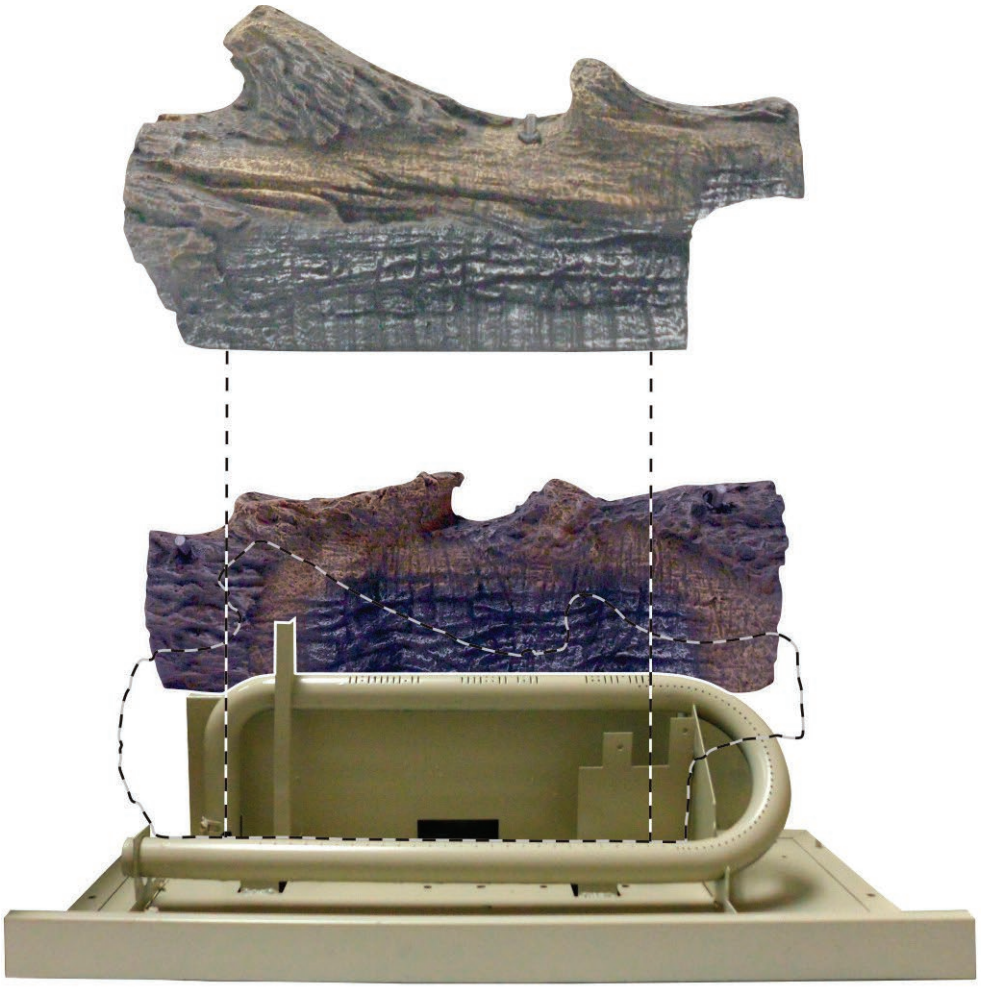

FRONT VIEW

LOG PLACEMENT

3. Place **Log C** onto the two Log Locating Extensions on the burner body as shown below.

TOP VIEW

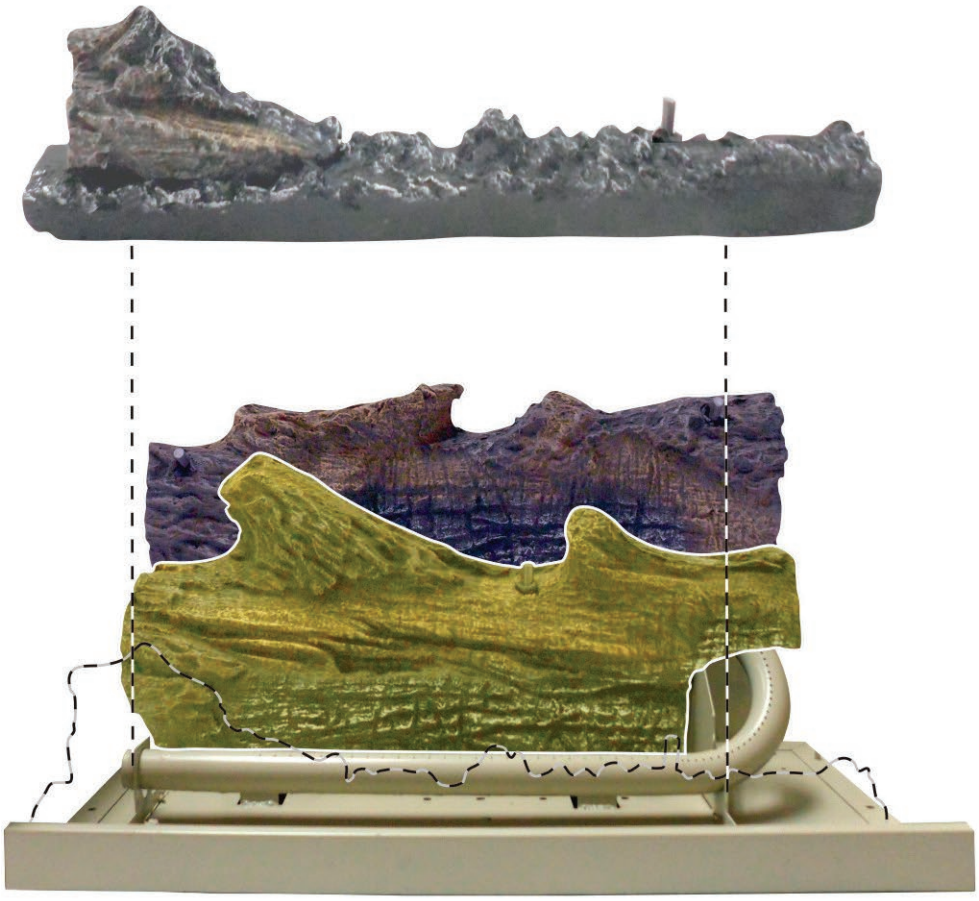

FRONT VIEW

LOG PLACEMENT

4. Place **Log D** onto the left pin on **Log A.** The end of **Log D** will rest on **Log C** as shown below.

TOP VIEW

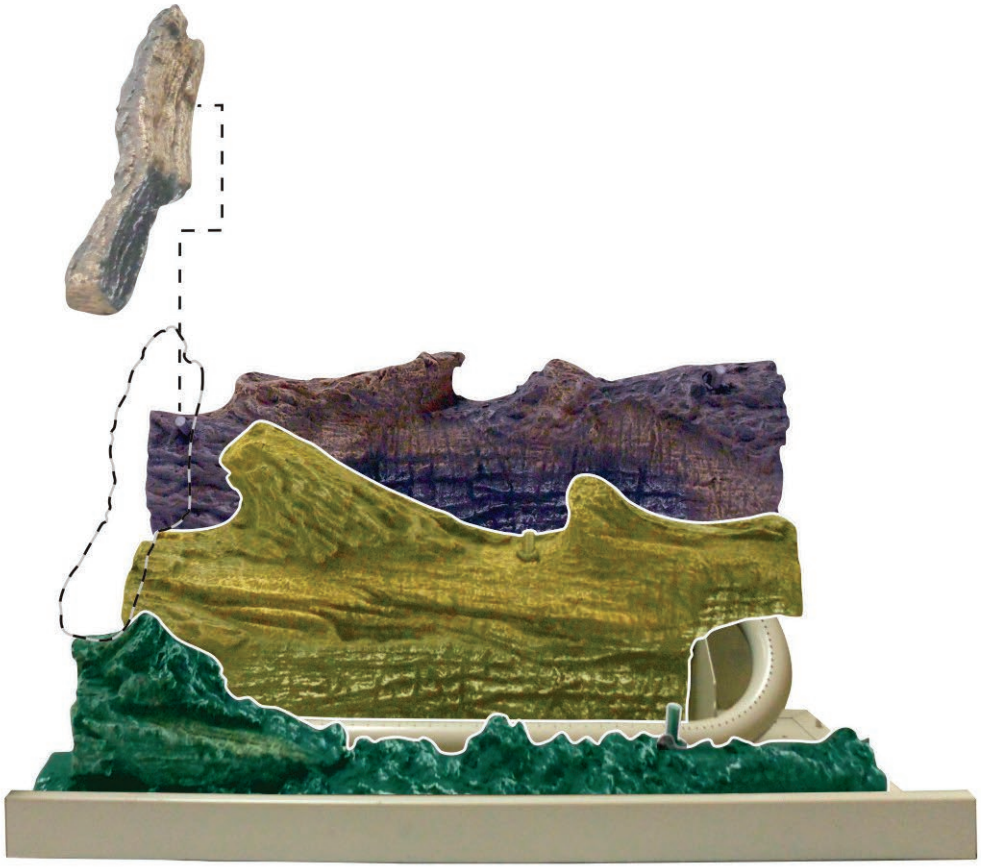

FRONT VIEW

LOG PLACEMENT

5. Place **Log E** on the right pin on **Log A.** The end of **Log E** will rest in the right flat area on **Log C** as shown below.

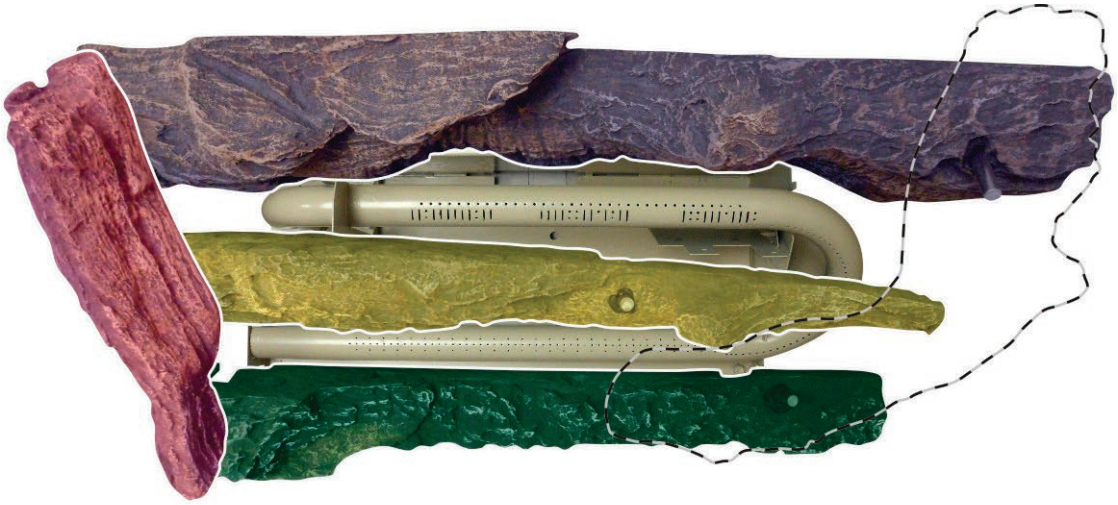

TOP VIEW

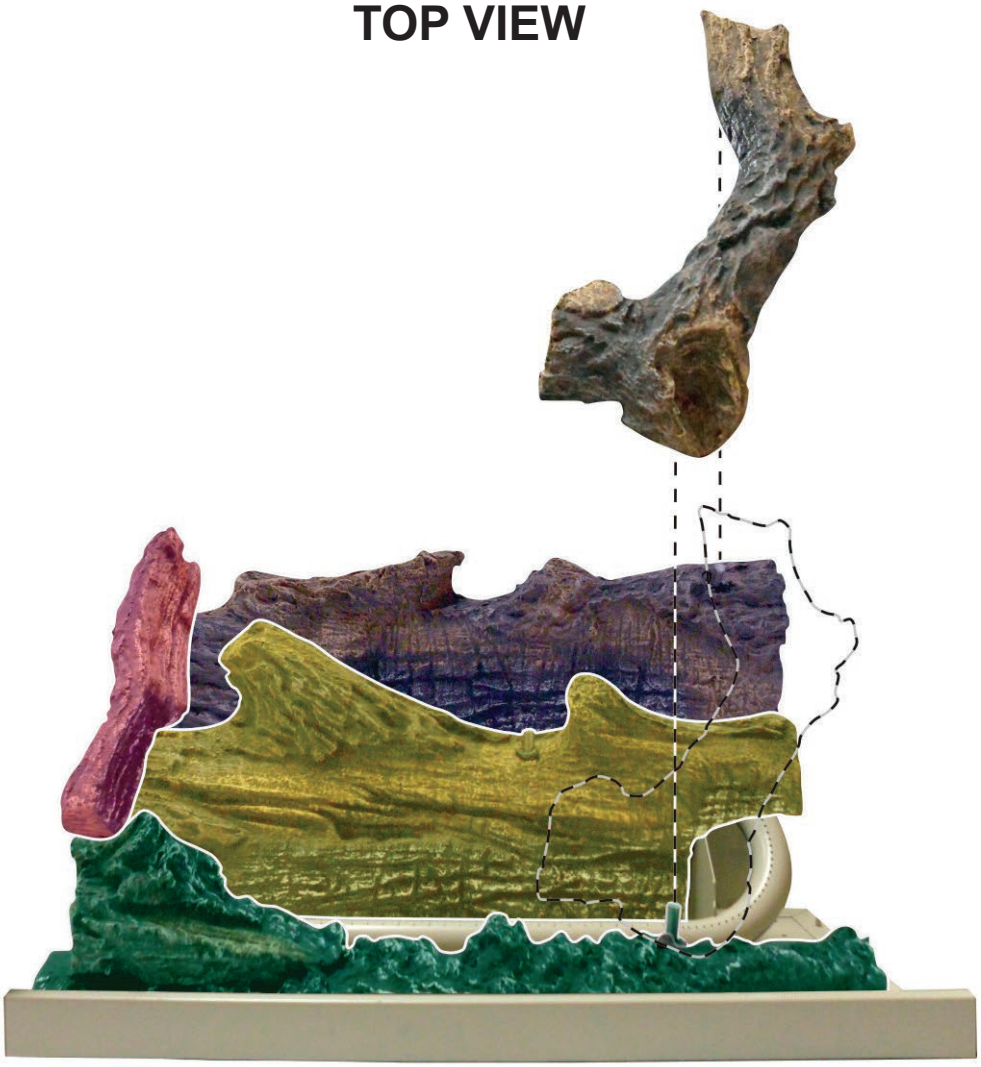

FRONT VIEW

LOG PLACEMENT

6. This step is optional for 10,000 BTU units. Place **Log F** next to the right nub on **Log B** and the left flat area on **Log C.** See image below.

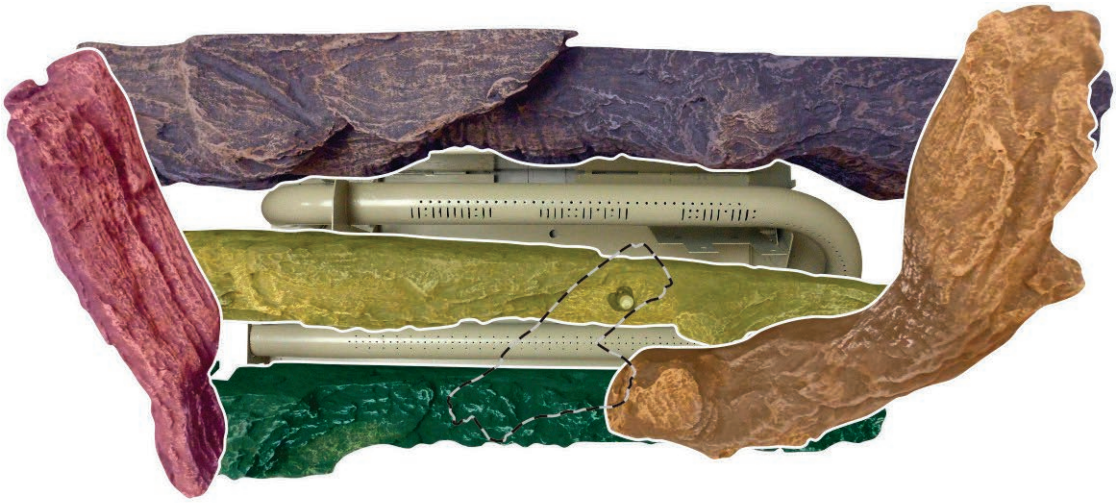

TOP VIEW

FRONT VIEW

LOG PLACEMENT

7. Log assembly is completed.

TOP VIEW

FRONT VIEW

PLACEMENT OF GLOWING EMBERS (ROCK WOOL)

Provided with the log set is a small bag of glowing embers (rock wool) to be placed between logs on the flat metal surface of the burner.

Placement of the embers (rock wool) is very individual and light coverage of the areas indicated will provide your best effects. We recommend separation of the rock wool by hand and make your coverage as light and fluffy as possible.

Place just enough embers (rock wool) on the burner to obtain the glow and a gold yellow flame.

Do not place rock wool over large ports in rear portion of burner.

A thin layer of rock wool should be placed under open space between the front and middle logs.

Rock wool should **not** be placed in the area of the pilot assembly.

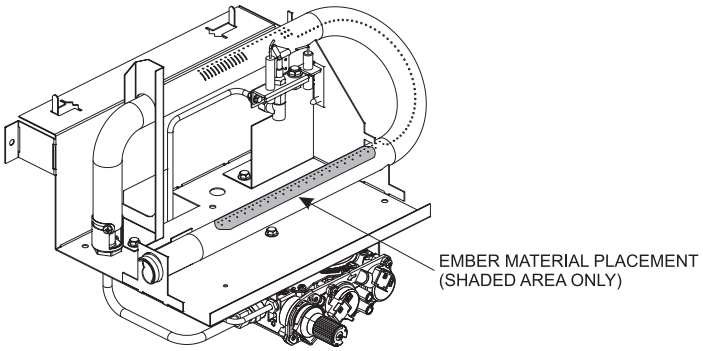

Figure 8

Replacement of loose material (glowing embers) must be purchased from Empire Comfort Systems, Inc. Application of excess loose material (glowing embers) may adversely affect performance of the heater.

⚠ WARNING
All previously applied loose material must be removed prior to reapplication.

NOTICE: A single layer of embers is to be used when applying Platinum Bright Embers (alone or in combination with production embers) to the burner.

Replacement Loose Material (glowing embers)	Part Number
Rock Wool - VFD10CC	31104
Rock Wool - VFD(20,30)CC	15998
Platinum Bright Embers	PE-20-1

OPERATION INSTRUCTIONS/FLAME APPEARANCE

Flames from the pilot (rear right back side of the burner) as well as the main flame should be visually checked as the log set is installed.

In normal operation at full rate after 10 to 15 minutes, the flame appearance should be sets of yellow flames.

NOTICE: All flames will be random by design, flame height will go up and down.

Glowing embers (rock wool) can cover the burner in between the front and middle logs, but very little is necessary to cover this area. Excess ember material causes the yellow flame to become orange and stringy. Apply just enough to obtain slow glow and a gold, yellow flame.

Avoid any drafts that alter burner flame patterns. Do not allow fans to blow directly into fireplace. Do not place a blower inside the burner area of the firebox. Ceiling fans may create drafts that alter flame patterns. Sooting and improper burning will result.

During manufacturing, fabricating and shipping, various components of this appliance are treated with certain oils, films or bonding agents. These chemicals are not harmful, but may produce annoying smoke and smells as they are burned off during the initial operation of the appliance, possibly causing headaches or eye or lung irritation. This is a normal and temporary occurrence.

The initial break-in operation should last 2-3 hours with the burner at the highest setting. Provide maximum ventilation by opening windows or doors to allow odors to dissipate. Any odors remaining after this initial break-in will be slight and will disappear with continued use.

OPERATING GUIDELINES

Before operating this heater, please review the safety warnings pages at the beginning of this manual and those precautions and warnings listed below.

1. Know what type of ignition system this model has (standing pilot) and follow the applicable SAFETY and LIGHTING instructions.
2. Check to ensure there are no gas leaks. If you are unsure, turn gas off to the heater and call a service person or your gas utility.

⚠ CAUTION

Clothing or other flammable material should not be placed on or near the appliance.

⚠ WARNING

Children and adults should be alerted to the hazard of high surface temperature and should stay away to avoid burns or clothing ignition. Young children should be carefully supervised when they are in the same room as the appliance.

3. Tampering is DANGEROUS and voids all warranties. Any component that is found to be faulty, must be replaced with an approved component.

Initial Lighting

Upon completing the gas line or turning the gas valve "ON" after it has been in the "OFF" position, a small amount of air will be in the lines. When first lighting the appliance, it will take a few minutes for the lines to purge themselves of this air. Once the purging is complete, the appliance will light and operate satisfactorily.

Subsequent lightings of the appliance will not require such purging if the gas valve is not turned to "OFF."

Standing Pilot Operation

1. Follow the SAFETY and LIGHTING INSTRUCTIONS for standing pilot controls found in this manual and on labels found attached to the appliance.

⚠ CAUTION

During the initial purging and subsequent lightings, never allow the gas valve control knob to remain depressed in the "pilot" position without pushing the piezo ignitor button at least once every second.

2. During the heating season, leave the control valve knob in the "ON" position. This will allow the pilot flame to remain lit. Turn the burner flame on or off with the appliance REMOTE/OFF/ON rocker switch, wall switch, remote control kits or 750 millivolt wall thermostat.

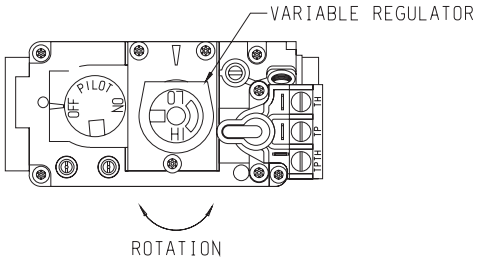

Figure 9

***NOTICE*:** The gas control valve allows you to increase or decrease the height of the main burner flame. The control valve has a pressure regulator with a knob as shown in Figure 9. Rotate the knob clockwise to "HI" to increase the flame height and counterclockwise to "LO" to decrease the flame height.

3. When the heating season is over, turn the REMOTE/OFF/ON switch to "OFF" and the control valve to "OFF". The system, including the pilot light, will be shut down.

Maximum and Minimum Input

The gas valve on the appliance allows the input to adjust between a maximum input of 25,000 Btuh to a minimum input of 17,500 Btuh. Please be advised, the maximum input provides the greatest amount of yellow flame and ember glow on the log set. The minimum input substantially decreases the yellow flame and ember glow on the log set.

MILLIVOLT LIGHTING INSTRUCTIONS

FOR YOUR SAFETY READ BEFORE LIGHTING

⚠ WARNING

If you do not follow these instructions exactly, a fire or explosion may result causing property damage, personal injury or loss of life.

A. This appliance has a pilot which must be lighted by hand. When lighting the pilot, follow these instructions exactly.

B. BEFORE LIGHTING, smell all around the appliance area for gas. Be sure to smell next to the floor because some gas is heavier than air and will settle on the floor.

WHAT TO DO IF YOU SMELL GAS

- **Do not try to light any appliance**
- **Do not touch any electrical switch; Do not use any phone in your building**
- **Immediately call your gas supplier from a neighbor's phone. Follow the gas supplier's instructions.**
- **If you cannot reach your gas supplier, call the fire department.**

C. Use only your hand to push in or turn the gas control knob. Never use tools. If the knob will not push in or turn by hand, don't try to repair it, call a qualified service technician. Force or attempted repair may result in a fire or explosion.

D. Do not use this appliance if any part has been under water. Immediately call a qualified service technician to inspect the appliance and to replace any part of the control system and any gas control which has been under water.

LIGHTING INSTRUCTIONS

1. STOP! Read the safety information above on this page.
2. Open bottom louver assembly (if applicable).
3. Set REMOTE/OFF/ON switch to "OFF".
4. Turn off all electric power to the appliance (if applicable).
5. Push in gas control knob slightly and turn clockwise to "OFF".
   NOTE: Knob cannot be turned from "PILOT" to "OFF" unless knob is pushed in slightly. Do not force.
6. Wait ten minutes to clear out any gas. Then smell for gas, including near the floor. If you smell gas, STOP! Follow "B" in the safety information above. If you do not smell gas, go to the next step.
7. Find pilot - Follow metal tube from gas control. The pilot is located next to the burner, near the right side.

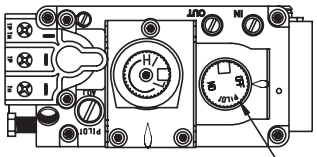

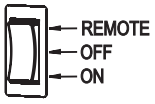

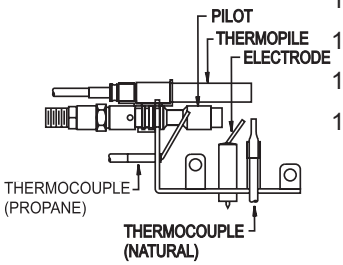

8. Turn gas control knob counterclockwise to "PILOT".
9. Push in control knob all the way and hold in. Repeatedly push the Piezo Ignitor Button until the pilot is lit. Continue to hold the control knob in for about one minute after the pilot is lit. Release knob, and it will pop back up. Pilot should remain lit. If it goes out, repeat steps 5 through 9.
   - If knob does not pop up when released, STOP and IMMEDIATELY call a qualified service technician or gas supplier.
   - If the pilot will not stay lit after several tries, turn the gas control knob to "OFF" and call your service technician or gas supplier.
10. Turn gas control knob counterclockwise to "ON".
11. Set REMOTE/OFF/ON switch to desired setting.
12. Turn on all electric power to the appliance (if applicable).
13. Close bottom louver assembly (if applicable).

TO TURN OFF GAS TO APPLIANCE

1. Open bottom louver assembly (if applicable).
2. Set REMOTE/OFF/ON switch to "OFF."
3. Turn off all electric power to the appliance if service is to be performed (if applicable).
4. Push in gas control knob slightly and turn clockwise to "OFF". Do not force.
5. Close bottom louver assembly (if applicable).

10,000 BTU MILLIVOLT LIGHTING INSTRUCTIONS

FOR YOUR SAFETY READ BEFORE LIGHTING

⚠ WARNING

If you do not follow these instructions exactly, a fire or explosion may result causing property damage, personal injury or loss of life.

A. This appliance has a pilot which must be lighted by hand. When lighting the pilot, follow these instructions exactly.

B. BEFORE LIGHTING, smell all around the appliance area for gas. Be sure to smell next to the floor because some gas is heavier than air and will settle on the floor.

WHAT TO DO IF YOU SMELL GAS

- **Do not try to light any appliance**
- **Do not touch any electrical switch; Do not use any phone in your building**
- **Immediately call your gas supplier from a neighbor's phone. Follow the gas supplier's instructions.**
- **If you cannot reach your gas supplier, call the fire department.**

C. Use only your hand to push in or turn the gas control knob. Never use tools. If the knob will not push in or turn by hand, don't try to repair it, call a qualified service technician. Force or attempted repair may result in a fire or explosion.

D. Do not use this appliance if any part has been under water. Immediately call a qualified service technician to inspect the appliance and to replace any part of the control system and any gas control which has been under water.

LIGHTING INSTRUCTIONS

1. STOP! Read the safety information above on this page.
2. Open bottom louver assembly (if applicable).
3. Set REMOTE/OFF/ON switch to "OFF".
4. Turn off all electric power to the appliance (if applicable).
5. Push in gas control knob slightly and turn clockwise to "OFF". NOTE: Knob cannot be turned from "PILOT" to "OFF" unless knob is pushed in slightly. Do not force.
6. Wait ten minutes to clear out any gas. Then smell for gas, including near the floor. If you smell gas, STOP! Follow "B" in the safety information above. If you do not smell gas, go to the next step.
7. Find pilot - Follow metal tube from gas control. The pilot is located next to the burner, near the right side.

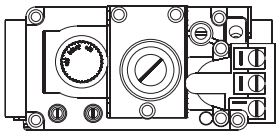

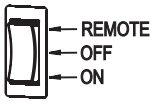

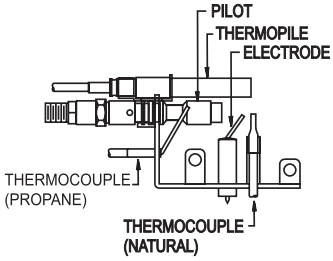

8. Turn gas control knob counterclockwise to "PILOT".
9. Push in control knob all the way and hold in. Repeatedly push the Piezo Ignitor Button until the pilot is lit. Continue to hold the control knob in for about one minute after the pilot is lit. Release knob, and it will pop back up. Pilot should remain lit. If it goes out, repeat steps 5 through 9.
   - If knob does not pop up when released, STOP and IMMEDIATELY call a qualified service technician or gas supplier.
   - If the pilot will not stay lit after several tries, turn the gas control knob to "OFF" and call your service technician or gas supplier.
10. Turn gas control knob counterclockwise to "ON".
11. Set REMOTE/OFF/ON switch to desired setting.
12. Turn on all electric power to the appliance (if applicable).
13. Close bottom louver assembly (if applicable).

TO TURN OFF GAS TO APPLIANCE

1. Open bottom louver assembly (if applicable).
2. Set REMOTE/OFF/ON switch to "OFF."
3. Turn off all electric power to the appliance if service is to be performed (if applicable).
4. Push in gas control knob slightly and turn clockwise to "OFF". Do not force.
5. Close bottom louver assembly (if applicable).

PILOT FLAME CHARACTERISTICS

Figures 10 and 12 show a correct pilot flame pattern. The correct flame will be blue and will extend beyond the thermocouple and thermopile. The flame will surround the thermocouple and thermopile just below the tip. A slight yellow flame may occur where the pilot flame and main burner flame meet. **Figures 11 and 13** show an incorrect pilot flame pattern. The incorrect pilot flame is not touching the thermocouple or thermopile. This will cause the thermocouple or thermopile to cool. When the thermocouple cools, the heater will shut down.

MILLIVOLT PILOT

Correct Pilot Flame Pattern

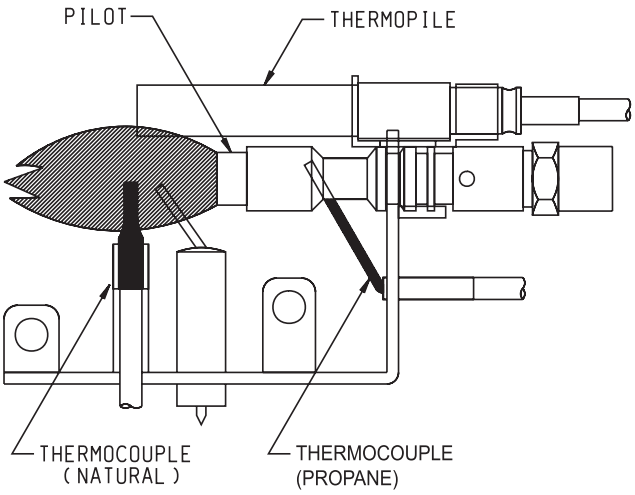

Figure 10

Incorrect Pilot Flame Pattern

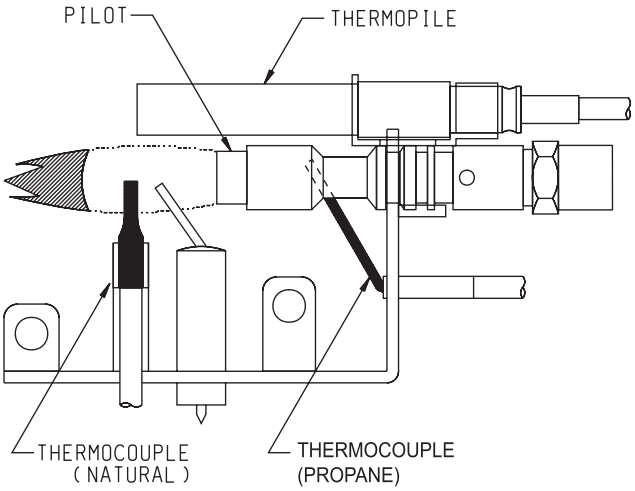

Figure 11

If pilot flame pattern is incorrect, as shown in **Figure 11:**

- See Troubleshooting, pages 20 and 21.

INTERMITTANT PILOT

Correct Pilot Flame Pattern

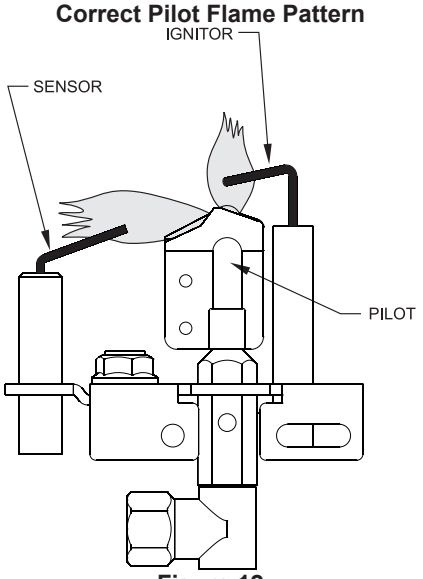

Figure 12

Incorrect Pilot Flame Pattern

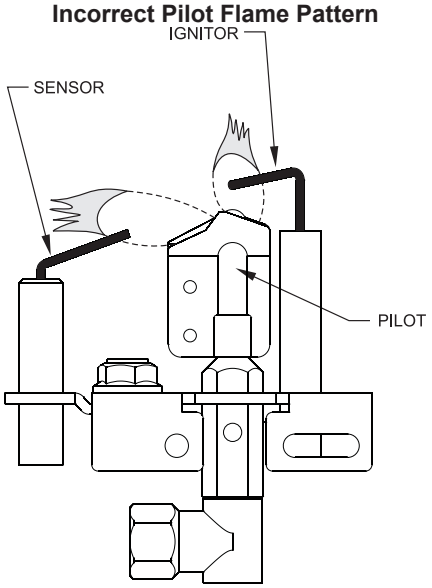

Figure 13

If pilot flame pattern is incorrect, as shown in **Figure 13:**

- See Troubleshooting, pages 25 to 27.

PILOT FLAME CHARACTERISTICS

Cleaning and Pilot Maintenance
Oxygen Depletion Sensor Pilot
When the pilot has a large yellow tip flame, clean the Oxygen Depletion Sensor as follows:

1. Clean the ODS pilot by loosening nut B from the pilot tubing. When this procedure is required, grasp nut A with an open end wrench.
2. Blow air pressure through the holes indicated by the arrows. This will blow out foreign materials such as dust, lint and spider webs. Tighten nut B also by grasping nut A.

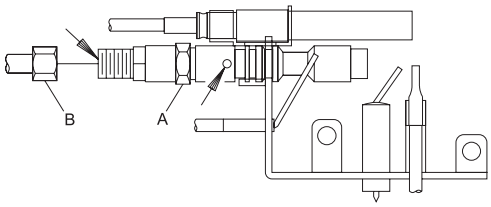

Millivolt Pilot
Figure 14

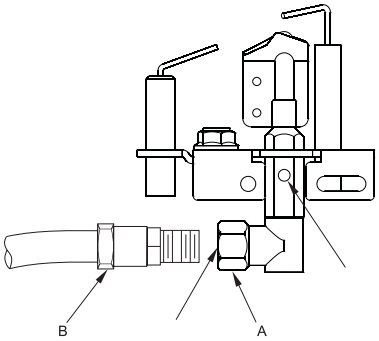

Intermittant Pilot
Figure 15

⚠ WARNING

Never use needles, wires, or similar cylindrical objects to clean the pilot to avoid damaging the calibrated ruby that controls the gas flow.

MILLIVOLT WIRING

ON/OFF/REMOTE Switch

This product is equipped with an ON/OFF/REMOTE switch which is located on the wire channel. A wire harness is attached to the ON/OFF/REMOTE switch. The red, black and green (wires) female push-ons attach to the ON/OFF/REMOTE switch. At the opposite end of the wire harness, the black and green (wires) female push-ons attach to the gas valve. An additional green wire and the red wire, which are stripped and bare, will attach to the 750 millivolt wall thermostat accessory, or, to one of the other accessories that can be purchased for use with your log set.

Operation of ON/OFF/REMOTE Switch with no Accessories

To ignite main burner, turn the control knob on the gas valve from the PILOT position to the ON position. Turn the ON/OFF/REMOTE switch from the OFF position to the ON position. The additional green wire and red wire, which are stripped and bare are not used.

Operation of ON/OFF/REMOTE Switch with Accessories
750 Millivolt Wall Thermostat

Connect the green and red, stripped and bare, wires on the ON/OFF/REMOTE switch wire harness to the wall thermostat. Turn the ON/OFF/REMOTE switch on the wire channel to the REMOTE position. Set the wall thermostat to the desired temperature.

It is important to use wire of a gauge proper for the length of the wire:

RECOMMENDED WIRE GAUGES	
Maximum Length	**Wire Gauge**
1' to 10'	18
10' to 25'	16
25' to 35'	14

Wall Switch, FWS-1

Connect the green and red, stripped and bare, wires on the ON/OFF/REMOTE switch wire harness to the wall switch. Turn the ON/OFF/REMOTE switch on the wire channel to the REMOTE position. Pivot the rocker switch on the FWS-1 to the ON position.

Battery Operated Remote Control, FRBC, FRBTP, TRW, and FRBTC

Connect the green and red, stripped and bare, wires on the ON/OFF/REMOTE switch wire harness to the remote receiver that is a component in the FRBC and FRBTC. Turn the ON/OFF/REMOTE switch on the wire channel to the REMOTE position. Follow instructions in the FRBC and FRBTC to complete installation.

***NOTICE*:** If batteries fail in FRBC or FRBTC, and immediate heat is desired, turn the ON/OFF/REMOTE switch on wire channel from the REMOTE position to the ON position.

Electric (120 volt) Operated Remote Control, FREC

Connect the green and red, stripped and bare, wires on the ON/OFF/REMOTE switch wire harness to the wires on remote receiver that is a component in the FREC. Turn the ON/OFF/REMOTE switch on the wire channel to the REMOTE position. Follow instructions in the FREC to complete installation.

***NOTICE*:** If electric (120 volt) fails in FREC, and immediate heat is desired, turn the ON/OFF/REMOTE switch on wire channel from the REMOTE position to the ON position.

Wiring of ON/OFF/REMOTE Switch with 750 Millivolt Wall Thermostat Accessory and Another Accessory

Connect the green and red, stripped and bare, wires on the ON/OFF/REMOTE switch wire harness to the 750 millivolt wall thermostat AND to the remote receiver that is a component in the FRBC, FREC OR to the FWS, wall switch.

1. Connect one wire from the 750 millivolt wall thermostat and one wire from appropriate accessory to the GREEN, stripped and bare wire from the ON/OFF/REMOTE wire harness.
2. Connect one wire from the 750 millivolt wall thermostat and one wire from appropriate accessory to the RED, stripped and bare wire from the ON/OFF/REMOTE wire harness.
   NOTICE: When the appliance is in the MANUAL mode and the batteries fail in the FRBC or if the electric (120 volt) fails in the FREC, and immediate heat is desired, turn the ON/OFF/REMOTE switch on wire channel from the REMOTE position to the ON position.

Manual Operation

1. Turn ON/OFF/REMOTE switch on wire channel to REMOTE position.
2. Turn wall thermostat OFF.
3. Turn accessory, FRBC, FREC, FRBTP, TRW or FWS, ON. Appliance is now in the manual mode. You must turn the appliance ON or OFF with appropriate accessory.

Wall Thermostat Operation

1. Turn the ON/OFF/REMOTE switch on wire channel to REMOTE position.
2. Turn accessory, FRBC, FREC or FWS, OFF.
3. Turn wall thermostat ON and set appropriate temperature. Wall thermostat will cycle the appliance ON and OFF.

Installation of Remote Receiver

1. Attach, from left to right, the slide-on cover plate onto the remote receiver. **ON** will be to the top and **OFF** will be to the bottom on the slide-on cover plate.
2. Push the receiver slide button onto the receiver slide switch. Reverse installation of the slide button if it is off center.
3. Attach Velcro loop on the left side of the valve cover support.
4. Attach Velcro hook onto remote receiver. The word **TOP** on the remote receiver should be to the top when installed onto valve cover support.
5. Attach Velcro hook on remote receiver onto Velcro loop on valve cover support.
   Refer to remote control installation and operating instructions for more details on remote control.

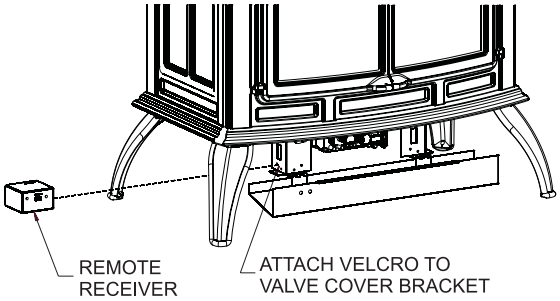

Figure 16

Wiring Diagram

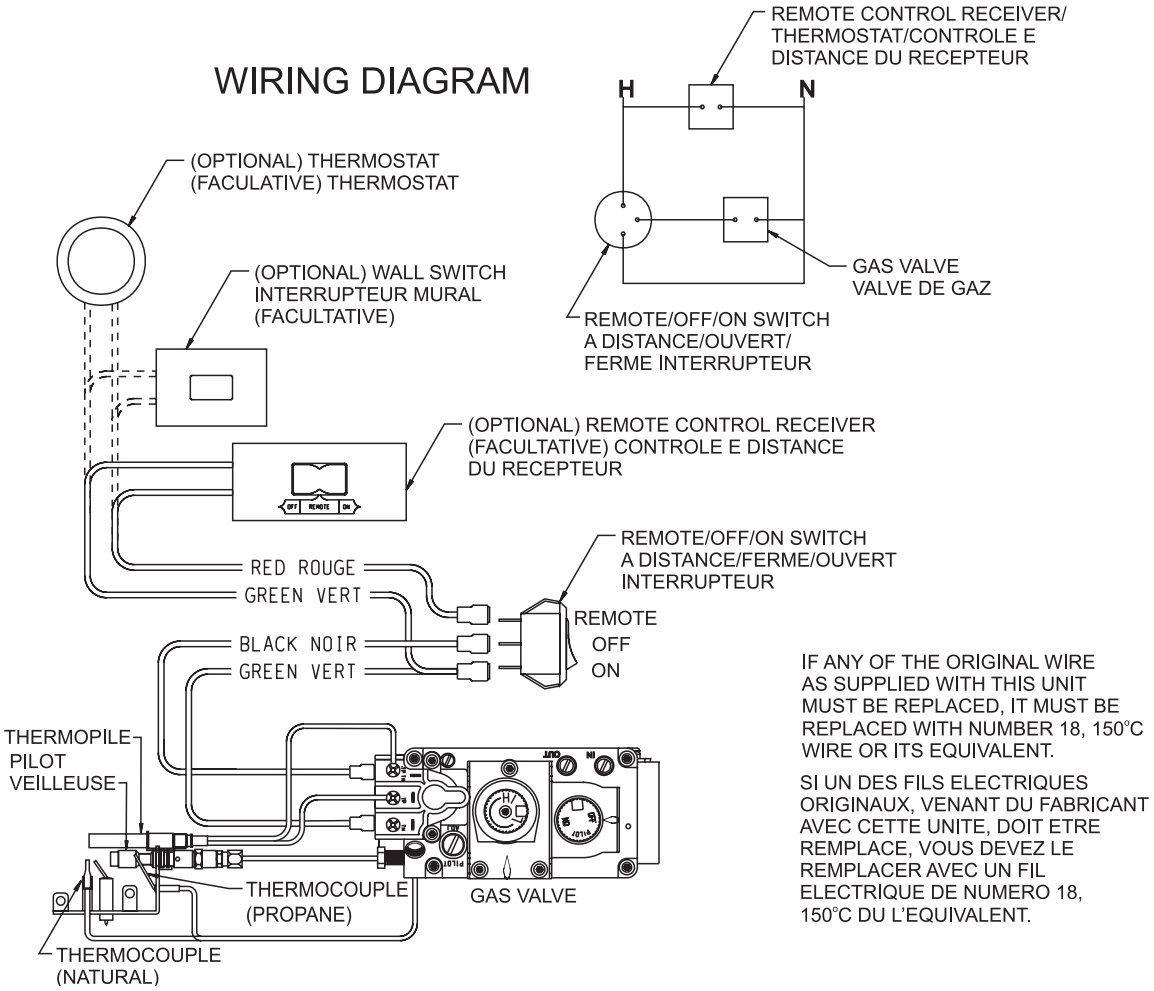

Figure 17

MILLIVOLT TROUBLESHOOTING

SYMPTOMS - POSSIBLE CAUSES AND CORRECTIONS

IMPORTANT: Operating heater where impurities in air exist may create odors. Cleaning supplies, paint, paint remover, cigarette smoke, cements and glues, new carpet or textiles, etc., create fumes. These fumes may mix with combustion air and create odors.

1. **When ignitor button is pressed, there is no spark at ODS/pilot.**
   a. Ignitor electrode positioned wrong - Replace ignitor.
   b. Ignitor electrode broken - Replace ignitor.
   c. Ignitor electrode not connected to ignitor cable - Reconnect ignitor cable.
   d. Ignitor cable pinched or wet - Free ignitor cable if pinched by any metal or tubing. Keep ignitor cable dry.
   e. Broken ignitor cable - Replace ignitor cable.
   f. Bad piezo ignitor - Replace piezo ignitor.
2. **When ignitor button is pressed, there is spark at ODS/pilot, but no ignition.**
   a. Gas supply turned off or manual shutoff valve closed - Turn on gas supply or open manual shutoff valve.
   b. Control knob not in PILOT position - Turn gas control knob to PILOT position.
   c. Control knob not pressed in while in PILOT position - Press in control knob while in PILOT position.
   d. Air in gas lines when installed - Continue holding down control knob. Repeat igniting operation until air is removed.
   e. Depleted gas supply - Contact local gas company.
   f. ODS/pilot is clogged - Clean ODS/pilot or replace ODS/pilot assembly.
   g. Gas regulator setting is not correct - Replace gas regulator.
3. **ODS/pilot lights but flame goes out when control knob is released.**
   a. Control knob not fully pressed in - Press in control knob fully.
   b. Control knob not pressed in long enough - After ODS/pilot lights, keep control knob pressed in 30 seconds.
   c. Safety interlock system has been triggered (thermostat models only) - Wait one minute for safety interlock system to reset. Repeat ignition operation.
   d. Manual Shutoff valve not fully open - Fully open manual shutoff valve.
   e. Thermocouple connection loose at control valve - Hand tighten until snug, then tighten 1/4 turn more.
   f. Pilot flame not touching thermocouple, which allows thermocouple to cool, causing pilot flame to go out. This problem could be caused by either **1) low gas pressure** - Contact local gas company or **2) dirty or partially clogged ODS/pilot** - Clean ODS/pilot or replace ODS/pilot assembly.
   g. Thermocouple damaged - Replace thermocouple.
   h. Control valve damaged - Replace control valve.
4. **Main burner does not light after ODS/pilot is lit.**
   a. Main burner orifice clogged - Clean main burner or replace main burner orifice.
   b. Main burner orifice diameter is too small - Replace main burner orifice.
   c. Inlet gas pressure is too low - Contact local gas company.
5. **Pilot burning, no gas to burner, valve knob "ON", on/off switch "ON."**
   a. "On/Off" switch, wall switch, remote control or wires defective - Check "on/off" switch and wires for proper connections. Place jumper wires across terminal at switch - if burner comes on, replace defective switch. If OK, place jumper wires across switch wires at gas valve-if burner comes on, wires are faulty or connections are bad.
   b. Thermopile may not be generating sufficient millivolts - If the pilot flame is not close enough physically to the thermopile, clean the ODS/pilot.
   - Be sure the wire connections from the thermopile at the gas valve terminals are tight and the thermopile is fully inserted into the pilot bracket.
   - Check the thermopile with a millivolt meter. Take the reading at TH-TP & TP terminals of the gas valve. The meter should read 350 millivolts minimum, while holding the valve knob depressed in the PILOT position, with the pilot lit, and the ON/OFF switch in the OFF position. Replace the faulty thermopile if the reading is below the specified minimum.
   - With the pilot in the ON position, disconnect the thermopile leads from the valve. Take a reading at the thermopile leads. The reading should be 350 millivolts minimum. Replace the thermopile if the reading is below the minimum.
   c. Defective valve - Turn valve knob to "ON." Place ON/OFF switch to "ON." Check with millivolt meter at thermopile terminals. Millivolt meter should read greater than 200 millivolts. If the reading is okay and the main burner does not ignite, replace the gas valve
   d. Plugged main burner orifice - Check main burner orifice for blockage and remove.
6. **Delayed ignition of main burner.**
   a. Manifold pressure is too low - Contact local gas company.
   b. Main burner orifice clogged - Clean main burner and main burner orifice.
7. **If burning at main burner orifice occurs (a loud, roaring blow torch noise).**
   a. You must turn off burner assembly and contact a qualified service person.
   b. Main burner orifice is clogged or damaged – Clean main burner and main burner orifice or replace main burner orifice.
   c. Damaged main burner – Replace damaged main burner.
   d. Gas regulator defective – Replace gas regulator.
8. **Yellow flame in front section of main burner during main burner combustion.**
   a. Not enough air - Check main burner for dirt and debris. If found, clean main burner.
   b. Gas regulator defective - replace gas regulator.

MILLIVOLT TROUBLESHOOTING (CONT'D)

9. **Slight smoke or odor during initial operation.**
   a. Residues from manufacturing processes and logs curing - Problem will stop after a few hours of operation.
10. **Heater produces a whistling noise when main burner is lit.**
   a. Turning control knob to HI position when main burner is cold - Turn control knob to LO position and let warm up for a minute.
   b. Air in gas line - Operate main burner until air is removed from line. Have gas line checked by local gas company.
   c. Air passageways on heater blocked - Observe minimum installation clearances (see page 9).
   d. Dirty or partially clogged main burner orifice - Clean main burner and main burner orifice or replace main burner orifice.
11. **Heater produces a clicking/ticking noise just after main burner is lit or shut off.**
   a. Metal expanding while heating or contracting while cooling - This is common with most heaters. If noise is excessive, contact service person.
12. **Heater produces unwanted odor.**
   a. Heater burning vapors from paint, hair spray, glues, cleaners, chemicals, new carpet, etc. - Open window to ventilate room. Stop using odor causing products while heater is operating.
   b. Low fuel supply - Refill supply tank.
   c. Gas leak - Locate and correct all leaks.
13. **Heater shuts off in use (ODS operates).**
   a. Not enough fresh air is available - Open window and/or door for ventilation.
   b. Low line pressure - Contact local gas company.
   c. ODS/pilot is partially clogged - Clean ODS/pilot.
14. **Gas odor even when control knob is in OFF position.**
   a. Gas leak - Locate and correct all leaks.
   b. Control valve defective - Replace control valve.
15. **Gas odor during combustion.**
   a. Foreign matter between logs and main burner - remove foreign matter.
   b. Gas leak - Locate and correct all leaks.
16. **Doors open on their own.**
   a. Casting not level.
   - Loosen front leveling bolts to elevate front of casting slightly above the rear of casting.

5.25 VDC ELECTRONIC CONTROL VALVE

The electronic control valve system includes the ability to switch the pilot from a standing pilot mode to an intermittent pilot mode.

- **IPI Mode** - In the Intermittent Pilot mode, when the unit is turned ON, it will cause spark to the pilot, light the pilot, then allow the burner to light. When the unit is turned to OFF, both the burner and pilot will be OFF.
- **CPI Mode** - In the Continuous Pilot mode, the pilot remains ON continuously even when the burner is turned OFF.

NOTICE: A small toggle switch is located on a bracket that is used to switch from IPI (upward position) to the CPI (downward position). See Figure 18.

When the unit is turned to ON, the electrical current will energize a spark to the pilot igniter. Once the pilot sensor heats up (after a few seconds), the valve will be energized, allowing gas to flow to the burner.

1. Follow the SAFETY and LIGHTING INSTRUCTIONS for Intermittent Pilot controls found in this manual, and on labels found in the control compartment located in the lower cavity of the appliance.
2. During the operating season (or in power outage periods), it is recommended that the pilot remain in the CPI (standing pilot mode) to reduce cold start issues, and/or conserve battery backup power during a power outage.
3. The gas valve has inlet and outlet pressure taps as shown in Figure 18. Refer to page 8 for gas pressure requirements.

NOTICE: The gas control has a manual HI/LO flame adjustment knob (regulator) that allows you to increase or decrease the height of the burner flame. See Figure 18. Rotate the HI/LO knob counterclockwise to “HI” to increase the flame height, and clockwise to “LO” to decrease the flame height.

OPTIONAL REMOTE CONTROLS

To connect the remote receiver to the appliance, first disconnect the ON/OFF switch wires from the white and green wire connectors and connect the wires from the remote receiver to the green and white wire connectors. See Figure 18.

Follow the instructions included with the remote control for programming and other operational information.

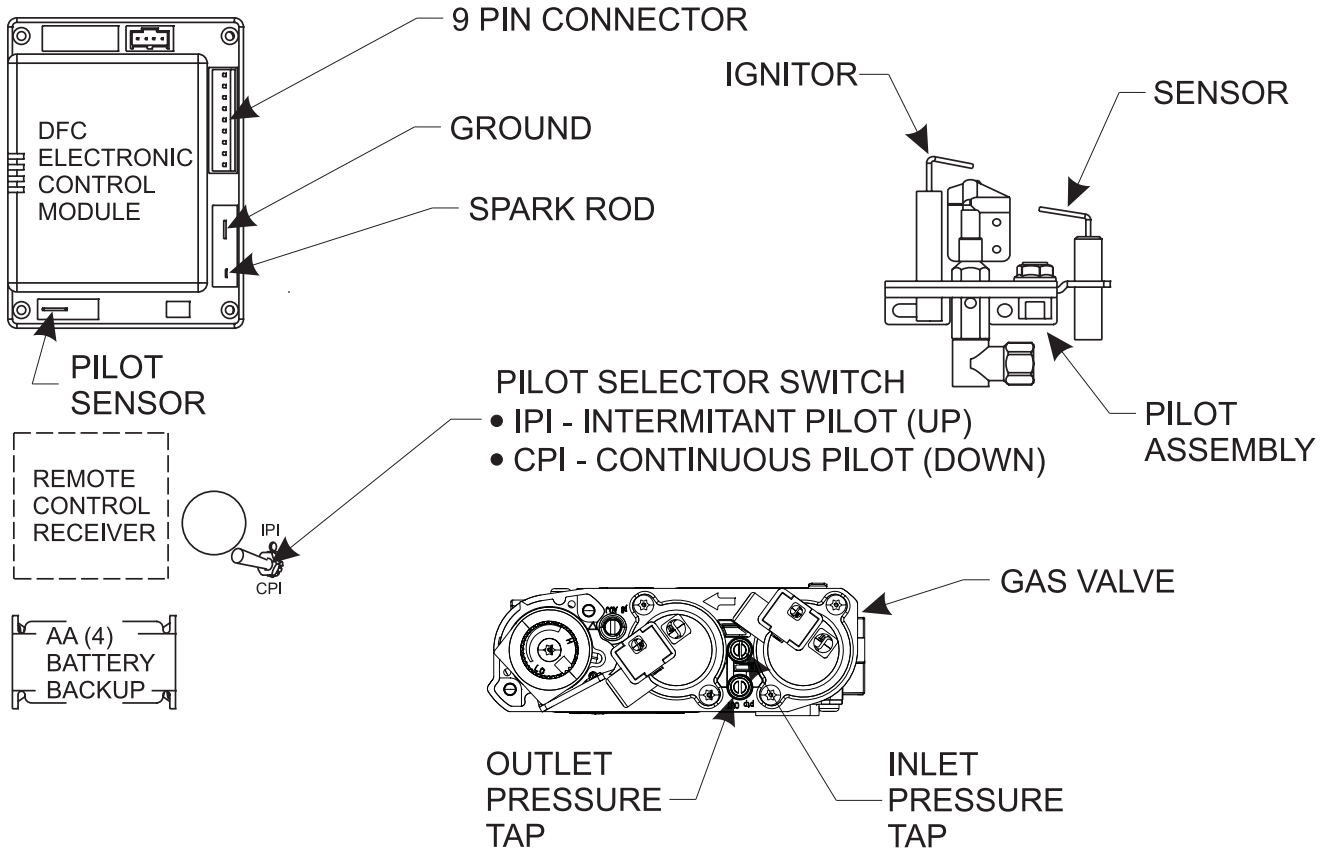

Figure 18

IP WIRING

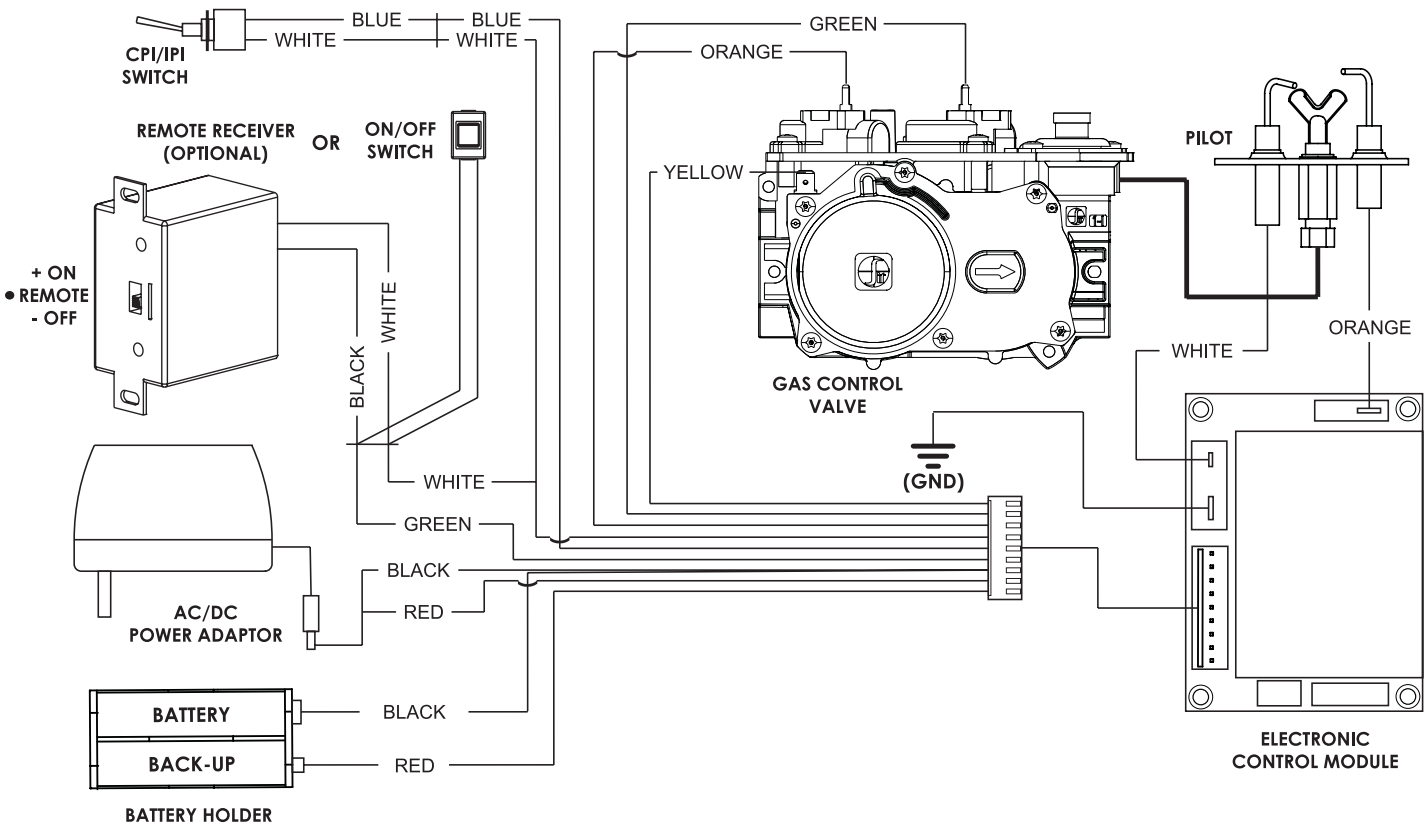

If any of the original wire as supplied with this unit must be replaced, it must be replaced with equivalent gauge and temperature rated wire.

This appliance is only for use with the type of gas indicated on the rating plate and may be installed in an aftermarket, permanently located, manufactured (mobile) home where not prohibited by local codes. This appliance is not convertible for use with other gases.

⚠ CAUTION

Do not operate the appliance with panel(s) removed, cracked or broken. Replacement of the panel(s) should be done by a licensed or qualified service person.

⚠ WARNING

Improper installation, adjustment, alteration, service or maintenance can cause property damage, personal injury or loss of life. Installation and service must be performed by a qualified installer, service agency or the gas supplier.

IP LIGHTING INSTRUCTIONS

FOR YOUR SAFETY READ BEFORE LIGHTING

⚠ WARNING

If you do not follow these instructions exactly, a fire or explosion may result causing property damage, personal injury or loss of life.

A. This appliance has a pilot which must be lighted by hand. When lighting the pilot, follow these instructions exactly.

B. Before lighting smell all around the appliance area for gas. Be sure to smell next to the floor because some gas is heavier than air and will settle on the floor.

What To Do If You Smell Gas
- Do not try to light any appliance.
- Do not touch any electrical switch;
- Do not use any phone in your building.
- Immediately call your gas supplier from a neighbor's phone. Follow the gas supplier's instructions.
- If you cannot reach your gas supplier, call the fire department.

C. Use only your hand to push in or turn the gas control knob. Never use tools. If the knob will not push in or turn by hand, don't try to repair it; call a qualified service technician. Force or attempted repair may result in a fire or explosion.

D. Do not use this appliance if any part has been under water. Immediately call a qualified service technician to inspect the appliance and to replace any part of the control system and any gas control which has been under water.

LIGHTING INSTRUCTIONS

1. STOP! Read the safety information above.
2. Turn OFF electric power to the appliance.
3. Remove front surround panel assembly or bottom louver if included.
4. Turn gas shut-off counterclockwise ↺ to “On” position.
5. Wait ten minutes to clear out any gas. Then smell for gas, including near the floor. If you smell gas, STOP! Follow “B” in the safety information above on this page. If you do not smell gas, go to the next step.
6. Turn ON electric power to the appliance.
7. Find pilot - Follow metal tube from gas control. The pilot is behind the burner on the right side.
8. Turn main flame to on. If the pilot does not light within 60 seconds, stop and go to Step 5.

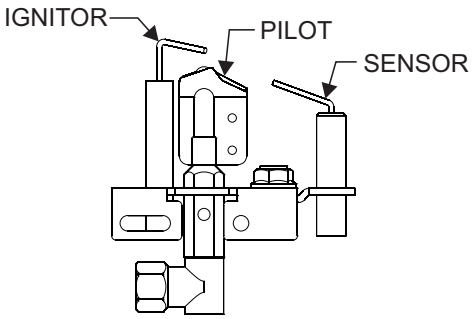

9. Refer to remote control instructions for detailed information, control features, and operation. Note: There is a CPI/IPI switch behind the right side panel that allows for a continuous standing pilot mode or an intermittent pilot mode. See appliance manual for location of this switch. If the pilot or burner does not stay lit (in the standing pilot mode), stop and immediately call a qualified service technician or gas supplier.
10. If the burner or pilot does not operate properly after several tries, turn the gas shut-off clockwise ↻ to “OFF” and call your service technician or gas supplier.
11. Replace the front surround assembly or close bottom louver assembly.
12. Operation of the gas valve is controlled by a manual on/off switch or a hand held remote control. Refer to remote instructions for detailed operation information.

GAS SHUT-OFF VALVE

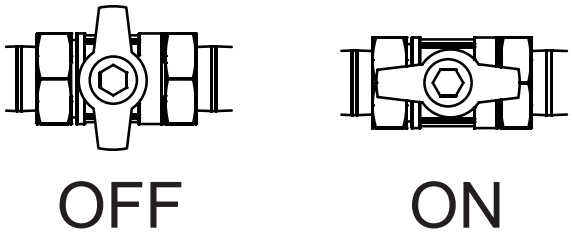

TO TURN OFF GAS TO FIREPLACE

1. Set REMOTE/OFF/ON switch to OFF.
2. Turn off all electric power to the appliance if service is to be performed (if applicable).
3. Lower bottom louver assembly.
4. Push in gas control knob slightly and turn clockwise ↻ to "OFF." Do not force.
5. Close bottom louver assembly.

Brief Description of the Components

The gas valve is equipped with a manual HI/LO knob to allow for manual modulation of the gas outlet pressure. The manual HI/LO knob can be replaced by an Empire Comfort Systems Variable Remote Kit.

⚠ WARNING

This appliance is equipped for Natural or Propane Gas. Field conversion is not permitted.

The Digital Fireplace Control (DFC) is an automatic gas ignition system based on a single microcontroller core. This control manages all functions related to ignition, flame sensing and supervision for atmospheric applications.

The DFC can be set to provide continuous or intermittent ignition control sequences and flame monitoring with safety shutdown in case of failure.

The DFC is set up as a stand alone (AC powered system with battery back up. See Lighting Instructions on page 24 and Wiring Diagram on page 23.

Troubleshooting

Before proceeding with the procedures in the following troubleshooting table, verify that the power supply (AC/DC adapter) is present and that the batteries inside the receiver and/or optional battery pack are fresh and installed with correct polarity.

Make sure all the connections between the wire harnesses and system components are proper and positive.

Verify that the static inlet pressure meets the manufacturer's recommended inlet pressure. If necessary adjust the line pressure regulator.

If the recommended actions for the following troubleshooting chart do not help to address the problem consider replacing wiring harnesses.

⚠ WARNING

Any actions performed on the gas valve must be performed in accordance with this instruction manual. Likewise, any actions performed on the DFC or other system components must be done in accordance with the individual component instructions.

Replacement of components must be performed in accordance with this instructions manual.

IP TROUBLESHOOTING (CONT'D)

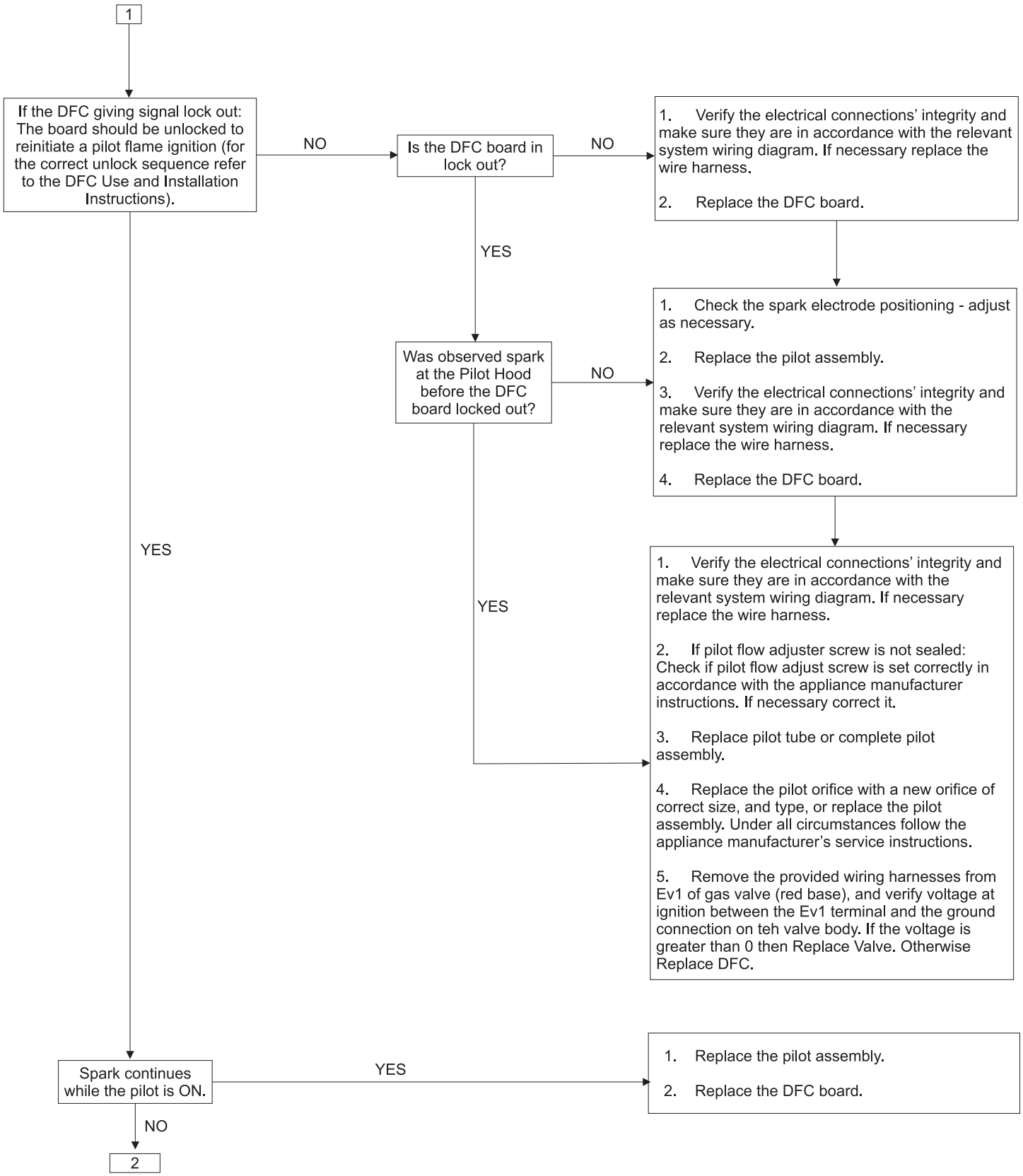

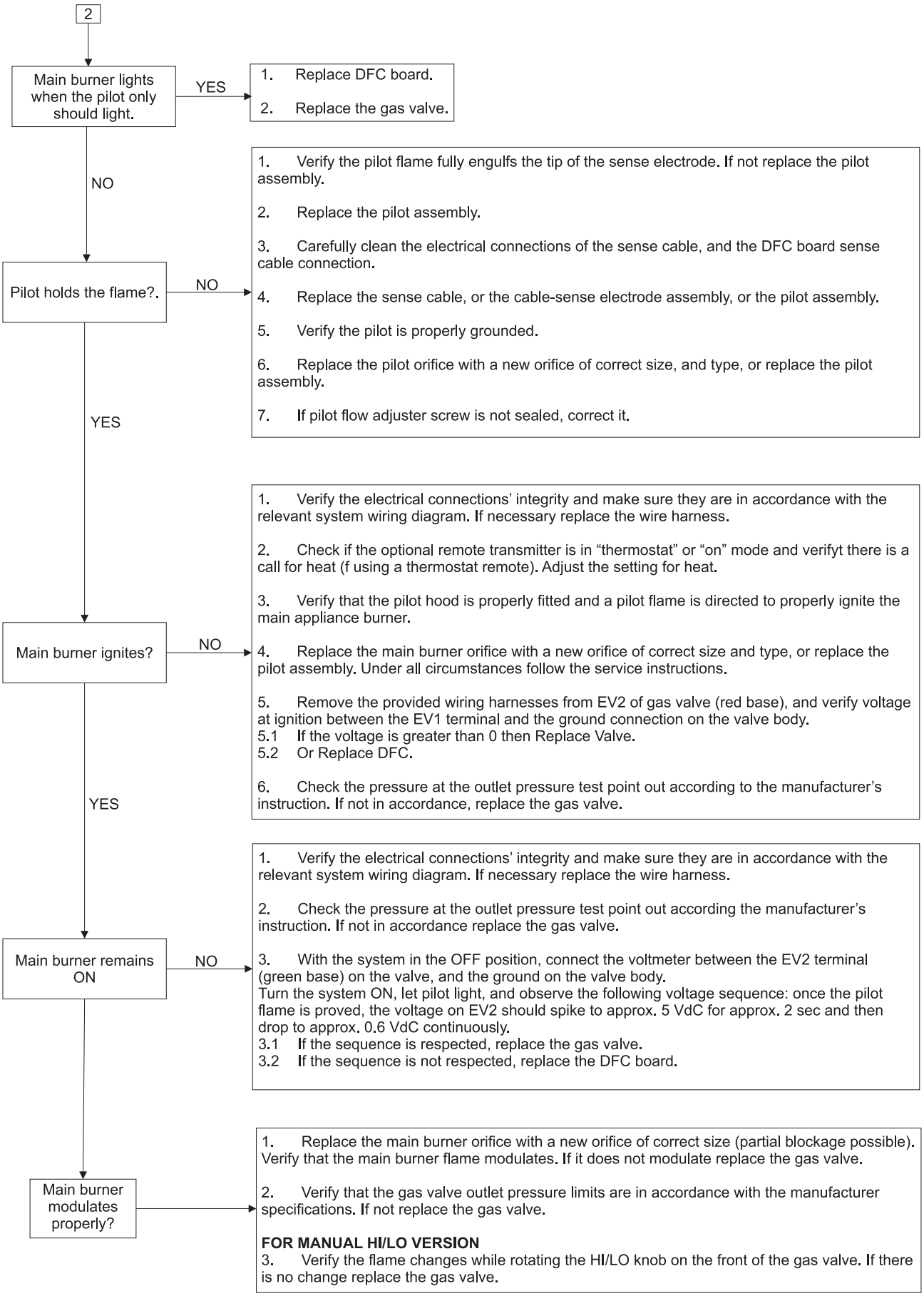
2
Main burner lights when the pilot only should light.
YES
1. Replace DFC board.
2. Replace the gas valve.
NO
Pilot holds the flame?.
NO
1. Verify the pilot flame fully engulfs the tip of the sense electrode. If not replace the pilot assembly.
2. Replace the pilot assembly.
3. Carefully clean the electrical connections of the sense cable, and the DFC board sense cable connection.
4. Replace the sense cable, or the cable-sense electrode assembly, or the pilot assembly.
5. Verify the pilot is properly grounded.
6. Replace the pilot orifice with a new orifice of correct size, and type, or replace the pilot assembly.
7. If pilot flow adjuster screw is not sealed, correct it.
YES
Main burner ignites?
NO
1. Verify the electrical connections' integrity and make sure they are in accordance with the relevant system wiring diagram. If necessary replace the wire harness.
2. Check if the optional remote transmitter is in "thermostat" or "on" mode and verifyt there is a call for heat (f using a thermostat remote). Adjust the setting for heat.
3. Verify that the pilot hood is properly fitted and a pilot flame is directed to properly ignite the main appliance burner.
4. Replace the main burner orifice with a new orifice of correct size and type, or replace the pilot assembly. Under all circumstances follow the service instructions.
5. Remove the provided wiring harnesses from EV2 of gas valve (red base), and verify voltage at ignition between the EV1 terminal and the ground connection on the valve body.
5.1 If the voltage is greater than 0 then Replace Valve.
5.2 Or Replace DFC.
6. Check the pressure at the outlet pressure test point out according to the manufacturer's instruction. If not in accordance, replace the gas valve.
YES
Main burner remains ON
NO
1. Verify the electrical connections' integrity and make sure they are in accordance with the relevant system wiring diagram. If necessary replace the wire harness.
2. Check the pressure at the outlet pressure test point out according the manufacturer's instruction. If not in accordance replace the gas valve.
3. With the system in the OFF position, connect the voltmeter between the EV2 terminal (green base) on the valve, and the ground on the valve body.
Turn the system ON, let pilot light, and observe the following voltage sequence: once the pilot flame is proved, the voltage on EV2 should spike to approx. 5 VdC for approx. 2 sec and then drop to approx. 0.6 VdC continuously.
3.1 If the sequence is respected, replace the gas valve.
3.2 If the sequence is not respected, replace the DFC board.
Main burner modulates properly?
1. Replace the main burner orifice with a new orifice of correct size (partial blockage possible). Verify that the main burner flame modulates. If it does not modulate replace the gas valve.
2. Verify that the gas valve outlet pressure limits are in accordance with the manufacturer specifications. If not replace the gas valve.
FOR MANUAL HI/LO VERSION
3. Verify the flame changes while rotating the HI/LO knob on the front of the gas valve. If there is no change replace the gas valve.

MAIN BURNER FLAME CHARACTERISTICS

Figure 19 shows a correct main burner flame pattern. **Figure 20** shows an incorrect main burner flame pattern.

If main burner flame pattern is incorrect, as shown in **Figure 22:**

- See Troubleshooting, pages 20 and 21 for millivolt models and pages 25 - 27 for IP models.

Correct Main Burner Flame will be Yellow in Color
Figure 19

Incorrect Main Burner Flame will be Blue in Color
Figure 20

Cleaning and Maintenance / Main Burner

⚠ WARNING

Turn off heater and let cool before cleaning.

After use, cleaning of the main burner may be required for the proper flame. The main burner may be cleaned by applying air pressure to the ports on the main burner.

Cleaning the Log Set and Firebox

⚠ CAUTION

Do not handle these logs with your bare hands. Always wear gloves to prevent skin irritation.

During the annual inspection and maintenance appointment, the service person should clean dust, lint, and any light accumulation from the logs and the firebox area. An extra-soft brush should be used on the logs and burner as they are extremely fragile; a vacuum cleaner may be used on the firebox. If at any time the logs cannot be removed or installed without forcing, the cause must be found. The logs must never be forced.

⚠ CAUTION

The ceramic logs are durable when handled and installed properly. However, they are delicate and may be damaged easily if not handled with care. Handling damage to the ceramic logs is not covered by warranty.

DO NOT HANDLE LOGS WHILE THEY ARE HOT. ALLOW PLENTY OF TIME FOR THE APPLIANCE TO COOL COMPLETELY BEFORE HANDLING.

PLEASE NOTE

It is normal for appliances fabricated of steel to give off some expansion and/or contraction noises during the start up or cool down cycle. Similar noises are found with your furnace heat exchanger or car engine.

MAINTENANCE

IMPORTANT: Turn off gas before servicing appliance. It is recommended that a qualified service technician perform these check-ups at the beginning of each heating season.

- Clean Burner and Control Compartment
  Keep the control compartment, logs and burner area surrounding the logs clean by vacuuming or brushing at least twice a year.

  Cleaning Procedure
  1. Turn off pilot light at gas valve.
  2. Remove screen front. (two 10 x 1/2" screws)
  3. Vacuum burner compartment especially around orifice/primary air openings.
  4. Replace screen front. (two 10 x 1/2" screws)
  5. Ignite pilot. (See Lighting Instructions, pages 14 and 24)
  6. Operate the main burner and visually check to make sure the flame pattern appears similar to the pictorial illustration shown for proper main burner flame pattern, Figure 19. If it appears abnormal call a service person.

Verify proper operation after servicing.

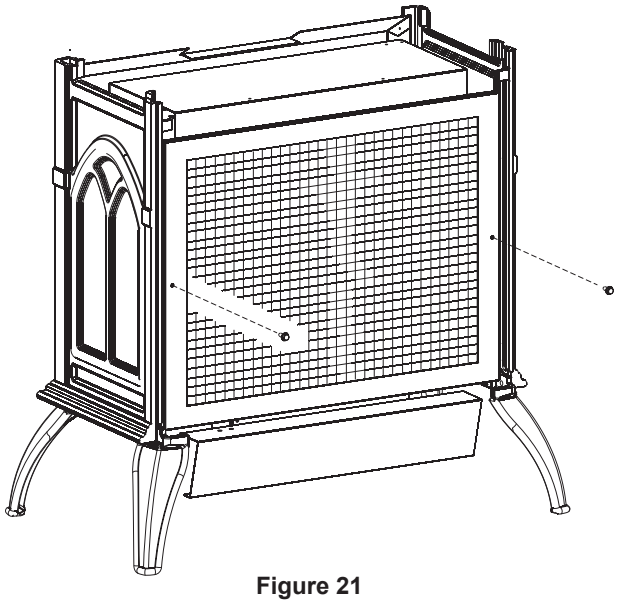

Figure 21

PARTS LIST - VFD10CC(30,70)

PLEASE NOTE: When ordering parts, it is very important that part number and description of part coincide.

INDEX NO.	PART NO.	DESCRIPTION
VFD10CC30(B,F,M)(N,P)		
1	31093	BURNER SHIELD (PROPANE ONLY)
2	24043	FIREBOX BRACE (2 REQUIRED)
3	29534	FIREBOX TOP
4	29528	FIREBOX WALLS
5	29865	SCREEN FRAME ASSEMBLY
6	17235	BRACKET, LOG LOCATOR
7	R11207	BURNER, TUBE
8a	P208	ORIFICE - NATURAL
8b	P193	ORIFICE - PROPANE
9	R7572	JAMB NUT
10	31103	BURNER BASE
11a	R3624	PILOT ASSEMBLY - NATURAL
11b	R3623	PILOT ASSEMBLY - PROPANE
12	21590	PILOT BRACKET
13	P212	FITTING, ORIFICE
14	29526	VALVE BRACKET
15	R2423	CONNECTOR, MALE 5/16
16	23496	TUBING ASSEMBLY, PILOT - PROPANE
17	23492	TUBING ASSEMBLY, REGULATOR TO PILOT - NATURAL
18	R7063	PILOT REGULATOR (NATURAL ONLY)
19	23491	TUBING ASSEMBLY, VALVE TO REGULATOR - NATURAL
20	29524	TUBING ASSEMBLY, INLET
21a	R3626	VALVE - NATURAL
21b	R3625	VALVE - PROPANE
22	29523	FIREBOX BOTTOM
23	29769	VALVE COVER ASSEMBLY
24	R9760	PIEZO IGNITER
26	29533	REAR COVER

INDEX NO.	PART NO.	DESCRIPTION
VFD10CC70(B,F,M)(N,P)		
1	31093	BURNER SHIELD (PROPANE ONLY)
2	24043	FIREBOX BRACE (2 REQUIRED)
3	29534	FIREBOX TOP
4	29528	FIREBOX WALLS
5	29865	SCREEN FRAME ASSEMBLY
6	17235	BRACKET, LOG LOCATOR
7	R11207	BURNER, TUBE
8a	P208	ORIFICE - NATURAL
8b	P193	ORIFICE - PROPANE
9	R7572	JAMB NUT
10	31103	BURNER BASE
11a	R11328 2019	PILOT ASSEMBLY - NATURAL
11b	R11327 2019	PILOT ASSEMBLY - PROPANE
12	31096	PILOT BRACKET
13	P212	FITTING, ORIFICE
14	29770	VALVE BRACKET
15	R2423	CONNECTOR, MALE 5/16
16	31098	TUBING ASSEMBLY, PILOT - PROPANE
17	31099	TUBING ASSEMBLY, REGULATOR TO PILOT - NATURAL
18	R7063	PILOT REGULATOR (NATURAL ONLY)
19	29543	TUBING ASSEMBLY, VALVE TO REGULATOR - NATURAL
20	29541	TUBING ASSEMBLY, INLET
21a	R11125	VALVE - NATURAL
21b	R11126	VALVE - PROPANE
22	29523	FIREBOX BOTTOM
23	29769	VALVE COVER ASSEMBLY
25	31092	PILOT SHIELD
26	29533	REAR COVER
27	R7591	FLEX LINE WITH SHUT-OFF
28	R11122	BATTERY HOLDER
29	R11123	WIRE HARNESS, PROFLAME DFC
30	R11127	CONTROL BOARD, PROFLAME DFC
31	R11128	POWER ADAPTOR, 7.0 VDC
N/S	R11332	WIRE, SENSOR - 24"
N/S	R11333	WIRE, IGNITER - 24"

N/S - NOT SHOWN

USE ONLY MANUFACTURER'S REPLACEMENT PARTS. USE OF ANY OTHER PARTS COULD CAUSE INJURY OR DEATH.

PARTS VIEW - VFD10CC(30,70)

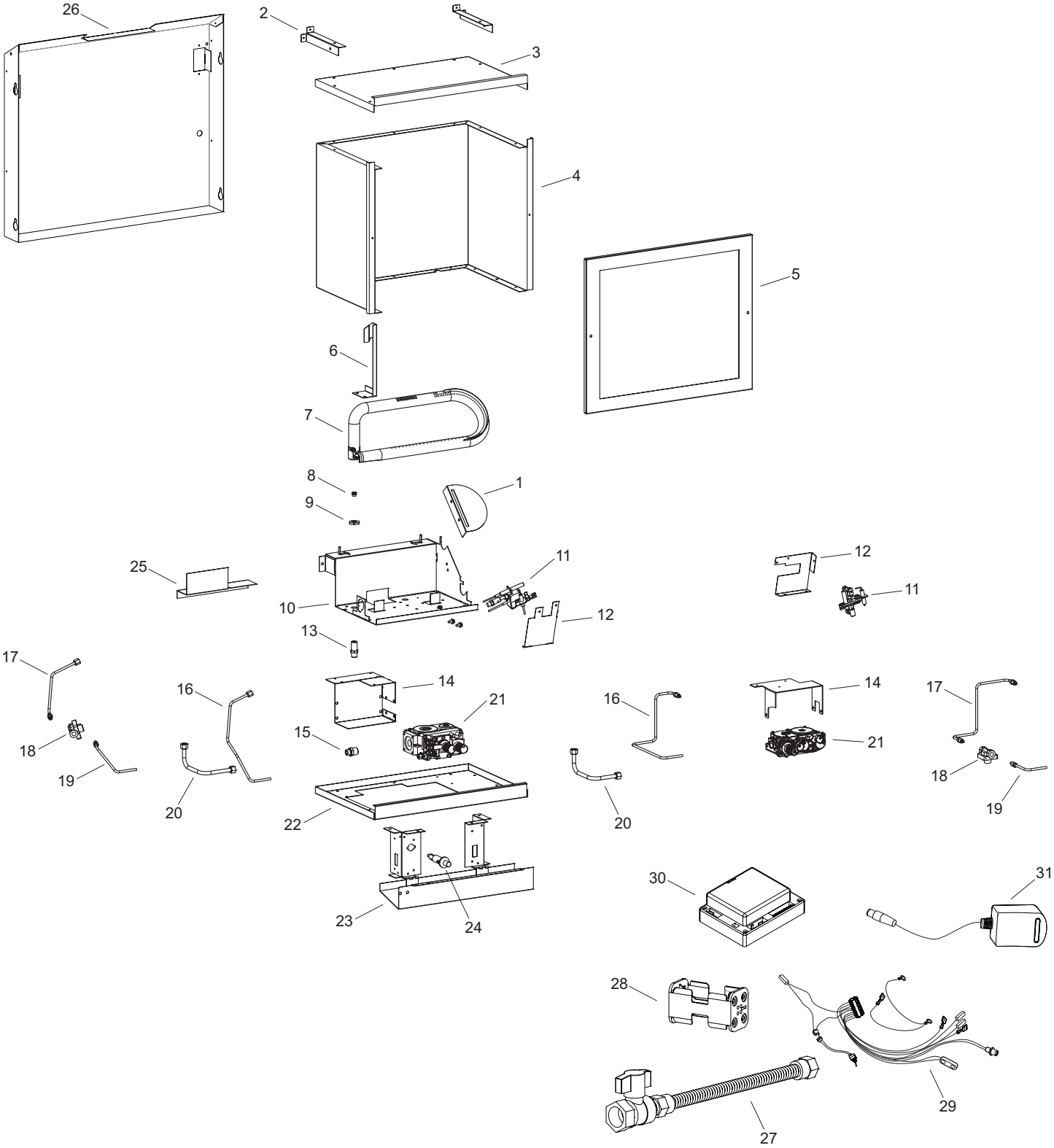

PARTS LIST - VFD20CC(30,70)

PLEASE NOTE: When ordering parts, it is very important that part number and description of part coincide.

INDEX NO.	PART NO.	DESCRIPTION
VFD20CC30(B,F,M)(N,P)		
1	29531	OUTLET BAFFLE
2	24043	FIREBOX BRACE (2 REQUIRED)
3	29530	FIREBOX TOP
4	29528	FIREBOX WALLS
5	29865	SCREEN FRAME ASSEMBLY
6	17235	BRACKET, LOG LOCATOR
7	R11206	BURNER, TUBE
8a	P316	ORIFICE - NATURAL
8b	P289	ORIFICE - PROPANE
9	R7572	JAMB NUT
10	31103	BURNER BASE
11a	R3624	PILOT ASSEMBLY - NATURAL
11b	R3623	PILOT ASSEMBLY - PROPANE
12	21590	PILOT BRACKET
13	P212	FITTING, ORIFICE
14	29526	VALVE BRACKET
15	R2423	CONNECTOR, MALE 5/16
16	23496	TUBING ASSEMBLY, PILOT - PROPANE
17	23492	TUBING ASSEMBLY, REGULATOR TO PILOT - NATURAL
18	R7063	PILOT REGULATOR (NATURAL ONLY)
19	23491	TUBING ASSEMBLY, VALVE TO REGULATOR - NATURAL
20	29524	TUBING ASSEMBLY, INLET
21a	R3626	VALVE - NATURAL
21b	R3625	VALVE - PROPANE
22	29523	FIREBOX BOTTOM
23	29769	VALVE COVER ASSEMBLY
24	R9760	PIEZO IGNITER
25	29533	REAR COVER

INDEX NO.	PART NO.	DESCRIPTION
VFD20CC70(B,F,M)(N,P)		
1	29531	OUTLET BAFFLE
2	24043	FIREBOX BRACE (2 REQUIRED)
3	29530	FIREBOX TOP
4	29528	FIREBOX WALLS
5	29865	SCREEN FRAME ASSEMBLY
6	17235	BRACKET, LOG LOCATOR
7	R11206	BURNER, TUBE
8a	P316	ORIFICE - NATURAL
8b	P289	ORIFICE - PROPANE
9	R7572	JAMB NUT
10	31103	BURNER BASE
11a	R11328 2019	PILOT ASSEMBLY - NATURAL
11b	R11327 2019	PILOT ASSEMBLY - PROPANE
12	29535	PILOT BRACKET
13	P212	FITTING, ORIFICE
14	29770	VALVE BRACKET
15	R2423	CONNECTOR, MALE 5/16
16	29542	TUBING ASSEMBLY, PILOT - PROPANE
17	29544	TUBING ASSEMBLY, REGULATOR TO PILOT - NATURAL
18	R7063	PILOT REGULATOR (NATURAL ONLY)
19	29543	TUBING ASSEMBLY, VALVE TO REGULATOR - NATURAL
20	29541	TUBING ASSEMBLY, INLET
21a	R11125	VALVE - NATURAL
21b	R11126	VALVE - PROPANE
22	29523	FIREBOX BOTTOM
23	29769	VALVE COVER ASSEMBLY
27	R7591	FLEX LINE WITH SHUT-OFF
28	R11122	BATTERY HOLDER
29	R11123	WIRE HARNESS, PROFLAME DFC
30	R11127	CONTROL BOARD, PROFLAME DFC
31	R11128	POWER ADAPTOR, 7.0 VDC
N/S	R11332	WIRE, SENSOR - 24"
N/S	R11333	WIRE, IGNITER - 24"
N/S	R7591	FLEX LINE WITH SHUT-OFF

N/S - NOT SHOWN

USE ONLY MANUFACTURER'S REPLACEMENT PARTS. USE OF ANY OTHER PARTS COULD CAUSE INJURY OR DEATH.

PARTS VIEW - VFD20CC(30,70)

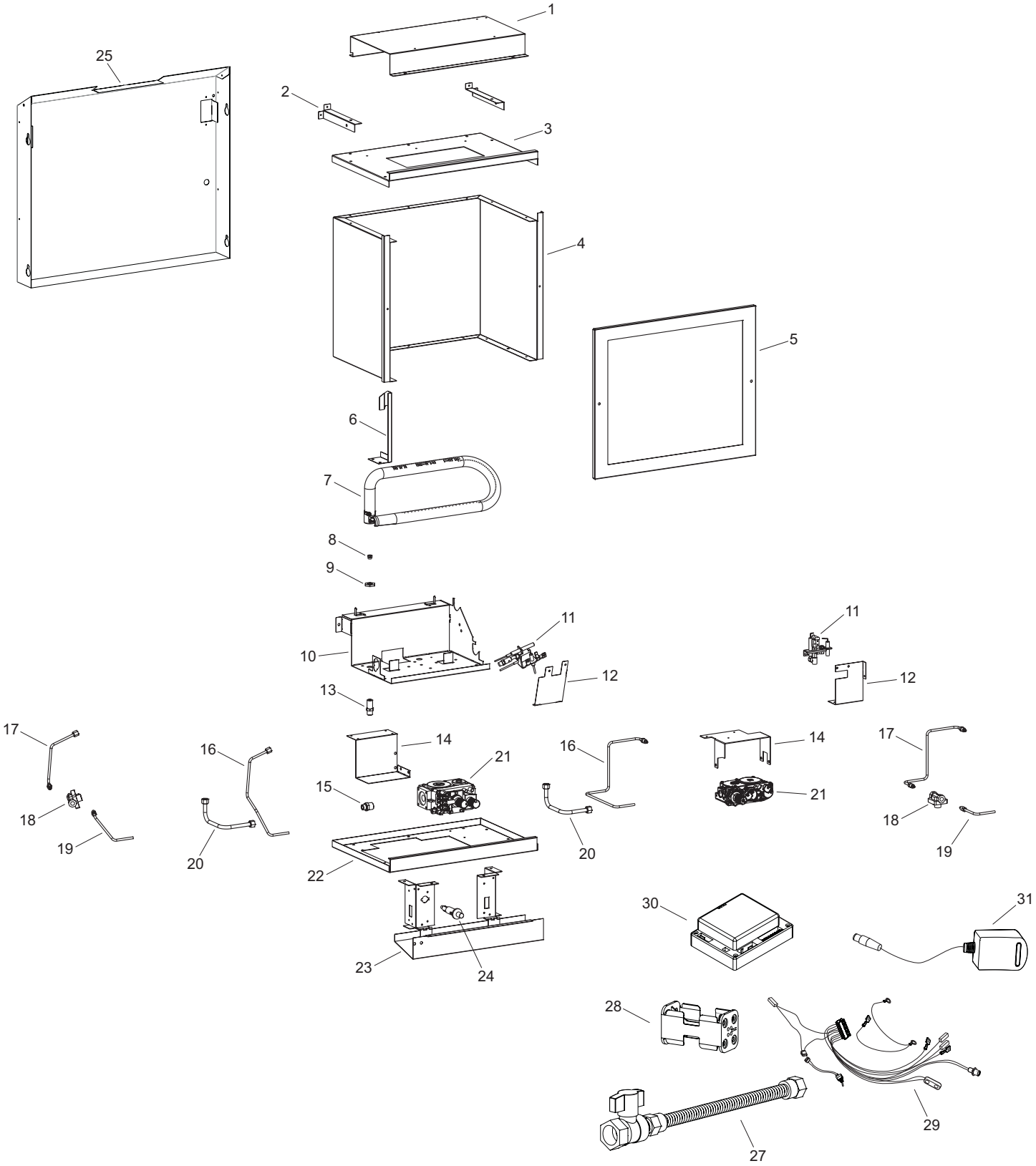

PARTS LIST - VFD30CC(30,70)

PLEASE NOTE: When ordering parts, it is very important that part number and description of part coincide.

INDEX NO.	PART NO.	DESCRIPTION
VFD30CC30(B,F,M,S,W)(N,P)		
1	15484	OUTLET BAFFLE
2	24043	FIREBOX BRACE (2 REQUIRED)
3	23938	FIREBOX TOP
4	29529	FIREBOX WALLS
5	15567	SCREEN FRAME ASSEMBLY
6	17235	BRACKET, LOG LOCATOR
7	R11209	BURNER, TUBE
8a	P286	ORIFICE - NATURAL
8b	P293	ORIFICE - PROPANE
9	R7572	JAMB NUT
10	29521	BURNER BASE
11a	R3624	PILOT ASSEMBLY - NATURAL
11b	R3623	PILOT ASSEMBLY - PROPANE
12	21590	PILOT BRACKET
13	P212	FITTING, ORIFICE
14	29526	VALVE BRACKET
15	R2423	CONNECTOR, MALE 5/16
16	23496	TUBING ASSEMBLY, PILOT - PROPANE
17	23492	TUBING ASSEMBLY, REGULATOR TO PILOT - NATURAL
18	R7063	PILOT REGULATOR (NATURAL ONLY)
19	23491	TUBING ASSEMBLY, VALVE TO REGULATOR - NATURAL
20	29525	TUBING ASSEMBLY, INLET
21a	R3626	VALVE - NATURAL
21b	R3625	VALVE - PROPANE
22	29527	FIREBOX BOTTOM
23	15516	VALVE COVER ASSEMBLY
24	R9760	PIEZO IGNITER
25	30676	REAR COVER

INDEX NO.	PART NO.	DESCRIPTION
VFD30CC70(B,F,M,S,W)(N,P)		
1	15484	OUTLET BAFFLE
2	24043	FIREBOX BRACE (2 REQUIRED)
3	23938	FIREBOX TOP
4	29529	FIREBOX WALLS
5	15567	SCREEN FRAME ASSEMBLY
6	17235	BRACKET, LOG LOCATOR
7	R11209	BURNER, TUBE
8a	P286	ORIFICE - NATURAL
8b	P293	ORIFICE - PROPANE
9	R7572	JAMB NUT
10	29521	BURNER BASE
11a	R11328 2019	PILOT ASSEMBLY - NATURAL
11b	R11327 2019	PILOT ASSEMBLY - PROPANE
12	29535	PILOT BRACKET
13	P212	FITTING, ORIFICE
14	29770	VALVE BRACKET
15	R2423	CONNECTOR, MALE 5/16
16	29536	TUBING ASSEMBLY, PILOT - PROPANE
17	29538	TUBING ASSEMBLY, REGULATOR TO PILOT - NATURAL
18	R7063	PILOT REGULATOR (NATURAL ONLY)
19	29537	TUBING ASSEMBLY, VALVE TO REGULATOR - NATURAL
20	29539	TUBING ASSEMBLY, INLET
21a	R11125	VALVE - NATURAL
21b	R11126	VALVE - PROPANE
22	29527	FIREBOX BOTTOM
23	15516	VALVE COVER ASSEMBLY
27	R7591	FLEX LINE WITH SHUT-OFF
28	R11122	BATTERY HOLDER
29	R11123	WIRE HARNESS, PROFLAME DFC
30	R11127	CONTROL BOARD, PROFLAME DFC
31	R11128	POWER ADAPTOR, 7.0 VDC
N/S	R11332	WIRE, SENSOR - 24"
N/S	R11333	WIRE, IGNITER - 24"
N/S	R7591	FLEX LINE WITH SHUT-OFF

N/S - NOT SHOWN

USE ONLY MANUFACTURER'S REPLACEMENT PARTS. USE OF ANY OTHER PARTS COULD CAUSE INJURY OR DEATH.

PARTS VIEW - VFD30CC(30,70)

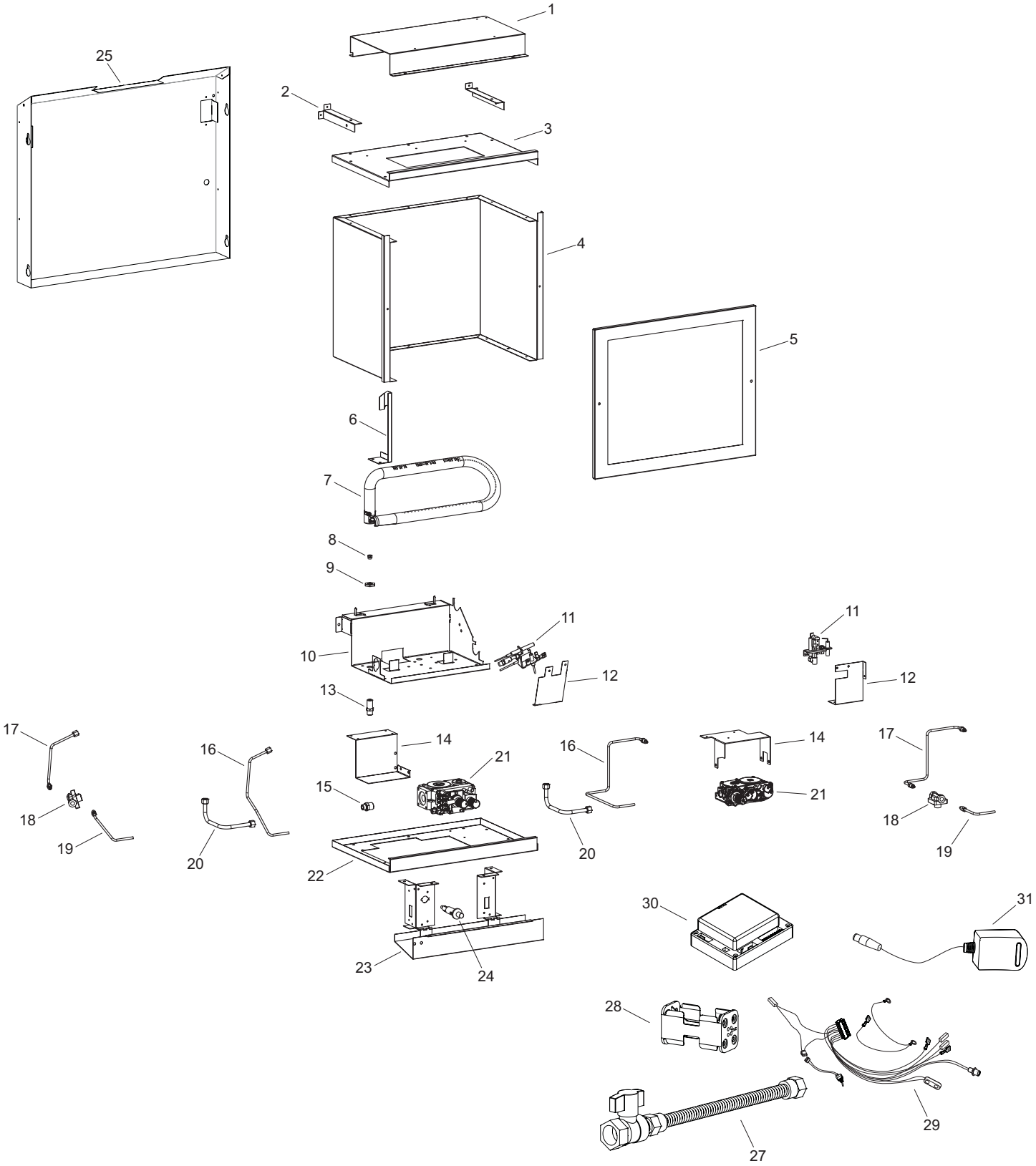

CASTING PARTS LIST - VFD(10,20,30)CC(30,70)

PLEASE NOTE: When ordering parts, it is very important that part number and description of part coincide.

NDEX NO.	PART NUMBER			DESCRIPTION
	VFD10	VFD20	VFD30	
COMMON PARTS				
11	R9671	R9671	R9671	INSERT TAB (4 REQUIRED)
NS	N/A	N/A	R9669	HINGE PIN (4 REQUIRED)
NS	R9924	R9924	R9924	BOLT, 1/4-20 X 3/4" (12 REQUIRED)
NS	R9670	R9670	N/A	BOLT, 1/4-20 X 1/2" (20 REQUIRED)
NS	R9829	R9829	R9829	BOLT, 1/4-20 X 2" (4 REQUIRED)
MATTE BLACK				
1	R11308	R11308	R11308	CASTING, INSERT VENT
2	N/A	N/A	R9538	TOP INSERT - RIGHT
3	N/A	N/A	R9537	TOP INSERT - LEFT
4	R11307	R11307	R9536	CASTING TOP
5	R11309	R11309	R9666	CASTING FRONT
6	R11306	R11306	R9535	CASTING SIDE - RIGHT
7	R11305	R11305	R9534	CASTING SIDE - LEFT
8	N/A	N/A	R9668	CASTING DOOR - RIGHT
9	N/A	N/A	R9667	CASTING DOOR - LEFT
10	24042	24042	24042	FIREBOX SUPPORT BRACKET (2 REQUIRED)
12	R11304	R11304	R9533	CASTING LEG B
13	R11303	R11303	R9532	CASTING LEG A
MATTE PEWTER				
1	N/A	N/A	R11322	CASTING, INSERT VENT
2	N/A	N/A	R9554	TOP INSERT - RIGHT
3	N/A	N/A	R9553	TOP INSERT - LEFT
4	N/A	N/A	R9552	CASTING TOP
5	N/A	N/A	R9693	CASTING FRONT
6	N/A	N/A	R9551	CASTING SIDE - RIGHT
7	N/A	N/A	R9550	CASTING SIDE - LEFT
8	N/A	N/A	R9695	CASTING DOOR - RIGHT
9	N/A	N/A	R9694	CASTING DOOR - LEFT
10	N/A	N/A	24042	FIREBOX SUPPORT BRACKET (2 REQUIRED)
12	N/A	N/A	R9549	CASTING LEG B
13	N/A	N/A	R9548	CASTING LEG A

INDEX NO.	PART NUMBER			DESCRIPTION
	VFD10	VFD20	VFD30	
PORCELAIN BLACK				
1	R11315	R11315	R11315	CASTING, INSERT VENT
2	N/A	N/A	R9570	TOP INSERT - RIGHT
3	N/A	N/A	R9569	TOP INSERT - LEFT
4	R11314	R11314	R9568	CASTING TOP
5	R11316	R11316	R9681	CASTING FRONT
6	R11313	R11313	R9567	CASTING SIDE - RIGHT
7	R11312	R11312	R9566	CASTING SIDE - LEFT
8	N/A	N/A	R9683	CASTING DOOR - RIGHT
9	N/A	N/A	R9682	CASTING DOOR - LEFT
10	24042	24042	24042	FIREBOX SUPPORT BRACKET (2 REQUIRED)
12	R11311	R11311	R9565	CASTING LEG B
13	R11310	R11310	R9564	CASTING LEG A
PORCELAIN SAND				
1	N/A	N/A	R11353	CASTING, INSERT VENT
2	N/A	N/A	R9586	TOP INSERT - RIGHT
3	N/A	N/A	R9585	TOP INSERT - LEFT
4	N/A	N/A	R9584	CASTING TOP
5	N/A	N/A	R9700	CASTING FRONT
6	N/A	N/A	R9583	CASTING SIDE - RIGHT
7	N/A	N/A	R9582	CASTING SIDE - LEFT
8	N/A	N/A	R9702	CASTING DOOR - RIGHT
9	N/A	N/A	R9701	CASTING DOOR - LEFT
10	N/A	N/A	24042	FIREBOX SUPPORT BRACKET (2 REQUIRED)
12	N/A	N/A	R9581	CASTING LEG B
13	N/A	N/A	R9580	CASTING LEG A
PORCELAIN MAHOGANY				
1	R11322	R11322	R11322	CASTING, INSERT VENT
2	N/A	N/A	R9602	TOP INSERT - RIGHT
3	N/A	N/A	R9601	TOP INSERT - LEFT
4	R11321	R11321	R9600	CASTING TOP
5	R11323	R11323	R9707	CASTING FRONT
6	R11320	R11320	R9599	CASTING SIDE - RIGHT
7	R11319	R11319	R9598	CASTING SIDE - LEFT
8	N/A	N/A	R9709	CASTING DOOR - RIGHT
9	N/A	N/A	R9708	CASTING DOOR - LEFT
10	24042	24042	24042	FIREBOX SUPPORT BRACKET (2 REQUIRED)
12	R11318	R11318	R9597	CASTING LEG B
13	R11317	R11317	R9596	CASTING LEG A

NS - NOT SHOWN

USE ONLY MANUFACTURER'S REPLACEMENT PARTS. USE OF ANY OTHER PARTS COULD CAUSE INJURY OR DEATH.

CASTING PARTS VIEW - VFD(10,20,30)CC(30,70)

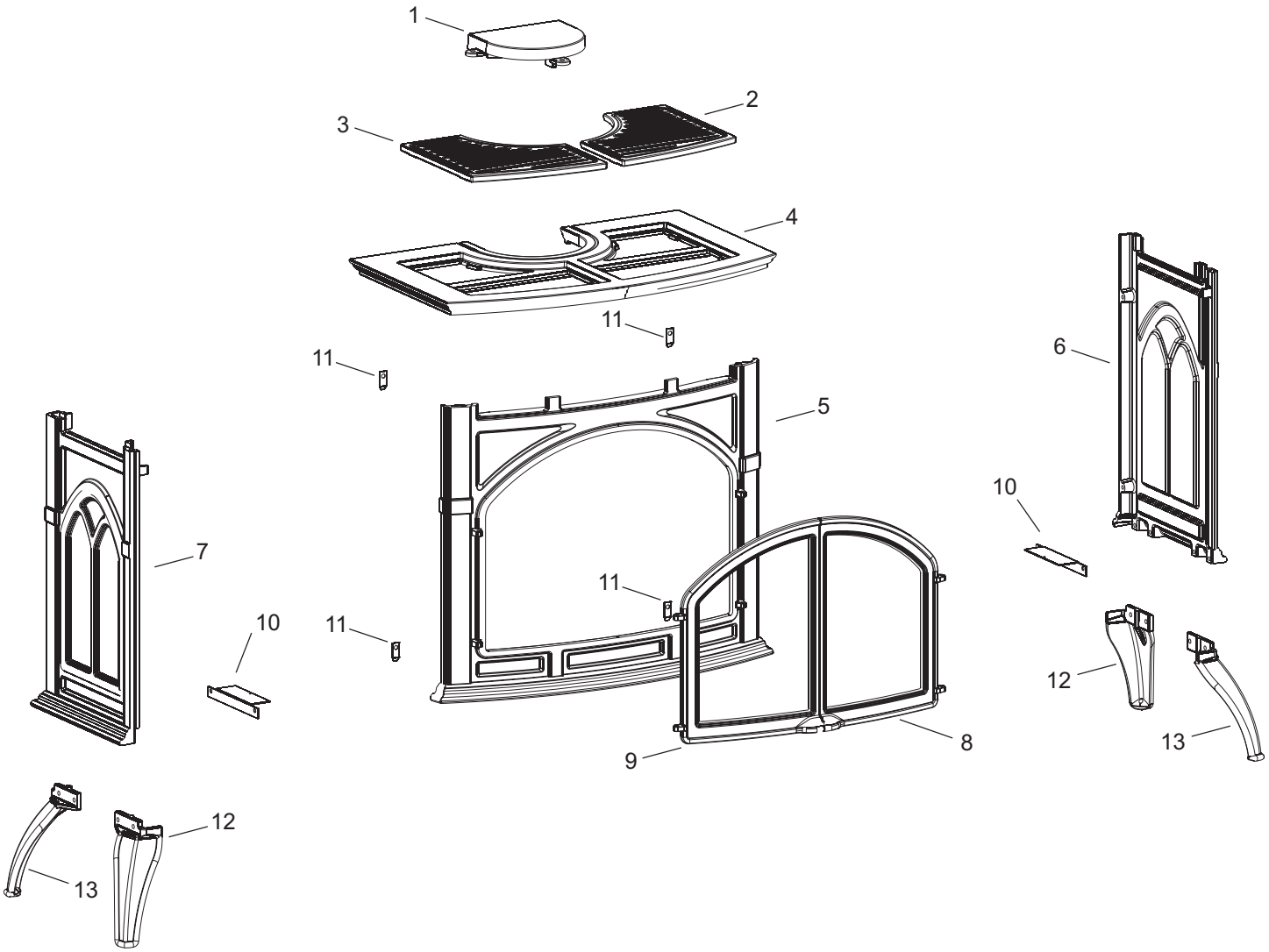

MASTER PARTS DISTRIBUTOR LIST

To Order Parts Under Warranty, please contact your local Empire dealer. See the dealer locator at www.empirecomfort.com. To provide warranty service, your dealer will need your name and address, purchase date and serial number, and the nature of the problem with the unit.

To Order Parts After the Warranty Period, please contact your dealer or one of the Master Parts Distributors listed below. This list changes from time to time. For the current list, please click on the Master Parts button at www.empirecomfort.com. Please note: Master Parts Distributors are independent businesses that stock the most commonly ordered Original Equipment repair parts for Heaters, Grills, and Fireplaces manufactured by Empire Comfort Systems Inc.

Dey Distributing
1401 Willow Lake Boulevard
Vadnais Heights, MN 55101

Phone: 651-490-9191
Toll Free: 800-397-1339
Website: www.deydistributing.com
Parts: Heater, Hearth and Grills

F. W. Webb Company
200 Locust Street
Hartford, CT 06114

Phone: 860-722-2433
Toll Free: 800-243-9360
Fax: 860-293-0479
Toll Free Fax: 800-274-2004
Websites: www.fwwebb.com & www.victormfg.com
Parts: Heater, Hearth and Grills

East Coast Energy Products
10 East Route 36
West Long Branch, NJ 07764

Phone: 732-870-8809
Toll Free: 800-755-8809
Fax: 732-870-8811
Website: www.eastcoastenergy.com
Parts: Heater, Hearth and Grills

HOW TO ORDER REPAIR PARTS

Parts Not Under Warranty

Parts can be ordered through your Service Person, Dealer, or a Master Parts Distributor. See this page for the Master Parts Distributors list. For best results, the **service person or dealer** should order parts through the distributor. Parts can be shipped directly to the **service person/dealer**.

Warranty Parts

Warranty parts will need a proof of purchase and can be ordered by your Service Person or Dealer. Proof of purchase is **required** for warranty parts.

All parts listed in the Parts List have a Part Number. When ordering parts, first obtain the Model Number and Serial Number from the name plate on your equipment. Then determine the Part Number (**not** the Index Number) and the Description of each part from the following illustration and part list. Be sure to give all this information . . .

Appliance Model Number _____ Part Description _____

Appliance Serial Number _____ Part Number _____

Type of Gas (Propane or Natural) _____

Do not order bolts, screws, washers or nuts. They are standard hardware items and can be purchased at any local hardware store.

Shipments contingent upon strikes, fires and all causes beyond our control.

ACCESSORY SIDE SHELVES INSTALLATION INSTRUCTIONS

Installing Accessory Side Shelves:

1. Remove cast iron or stone inlay inserts from casting top and carefully set them aside.
2. Remove cast iron top from stove and place upside down on a flat, soft smooth surface to avoid damage.
3. Remove four ¼-20 hex head bolts from the outer edges of cast iron top.
4. Place left and right side shelves in place shown in Figure 22.
5. Replace four ¼-20 hex head bolts to attach side shelves to cast iron top, be sure shelf is tight to casting top before fully tightening bolts.
6. Remove eight ¼-20 hex head bolts from side shelves.
7. Replace cast iron top on unit.

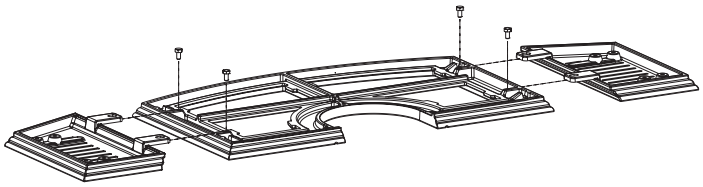

Figure 22

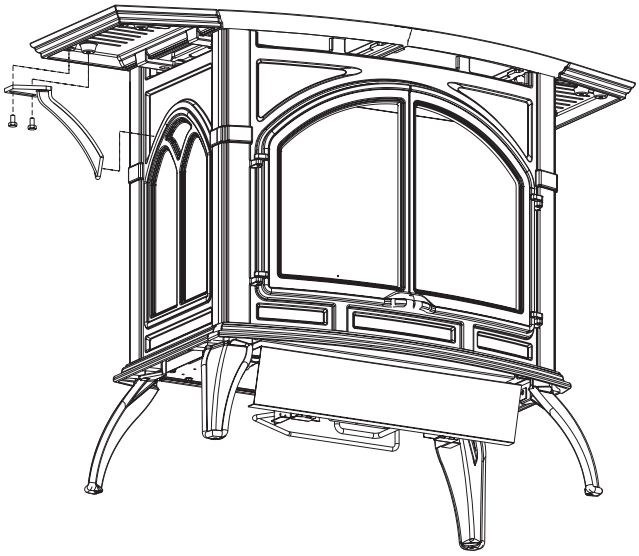

Figure 23

8. Attach side shelf supports one at a time, using two ¼-20 hex head bolts per support, sliding support flush to casting before fully tightening bolts as shown in Figure 22.
9. Replace cast iron or stone inlay inserts into casting top.

***NOTICE*:** Be sure to remove side shelf supports prior to removing cast iron top to eliminate potential scratching or chipping to the cast iron sides.

***NOTICE*:** Due to inherent properties of the casting process, non-combustible shims may be required to level accessory side shelves to the casting top. These shims are provided in the form of washers to be used on either side of the bolts. See Figure 22. If accessory shelf angles downward, toward the floor, washer(s) will need to be added to the center side of the bolt. Conversely, if the accessory side shelf angles upward, toward the ceiling, washer(s) will need to be added to the outside of the top casting side of the bolt. See Figure 25.

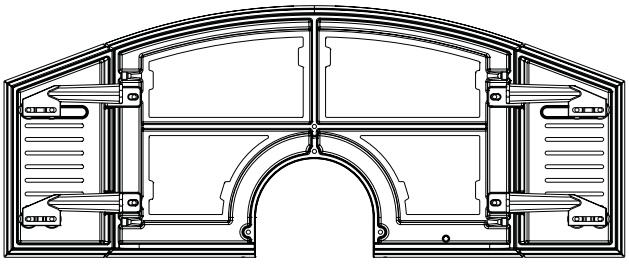

BOTTOM VIEW

Figure 24

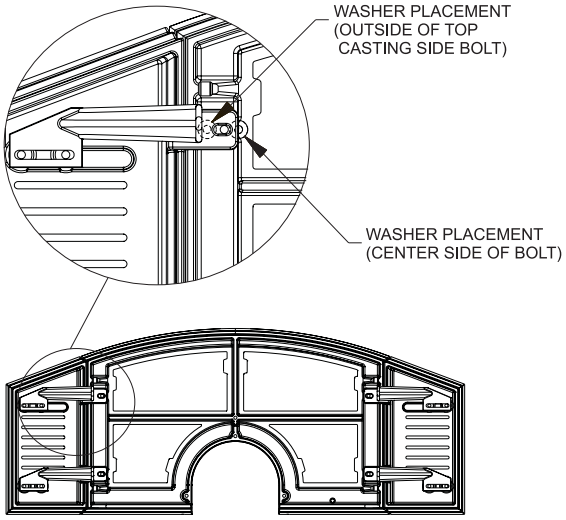

BOTTOM VIEW

Figure 25

OPTIONAL STONE INLAY INSTALLATION INSTRUCTIONS

Installation of Optional Stone Inlay

1. Remove left cast iron insert and right cast iron insert from casting top.
2. Insert left stone inlay and right stone inlay into casting top.
3. Installation of stone inlay is completed.

CIB4-1 OPTIONAL BLOWER INSTALLATION INSTRUCTIONS

Attention: The CIB4-1 Blower is for use with the VFD(10,20) CC Models.

⚠ CAUTION
Sharp edges, use protective gloves when installing.

Installation

1. Loosen, but do not remove, four hex-head screws located on the exterior, bottom of the appliance.
2. Position the blower assembly at the rear of the appliance. The blower assembly has four keyholes for attachment to the exterior, bottom of the appliance.
3. Place the large diameter holes in the keyholes over and behind the four hex-head screws that were loosened in Step 1. Push inward on the blower assembly to lock the keyholes into position behind the screws. Tighten four hex-head screws to secure blower assembly to exterior, bottom of the appliance.
4. Remove wire channel-left from appliance by removing two 10 x 1/2" screws on left side of the appliance. ***NOTICE***: Some units require a new wire channel. If Rheostat mounting holes are missing from part removed from unit, discard wire channel removed from unit and continue installation with appropriate wire channel shipped with blower. See Figure 26.
5. Route fan control wires through rectangular notch on wire channel - left.
6. Attach 1/4" push-on terminal from blue wire on the fan control to the AUTO (top) tab on the switch.
7. Attach 1/4" push-on terminal from black wire to the OFF (middle) tab on the switch.
8. Attach 1/4" push-on terminal from white wire on the fan control to the ON (bottom) tab on the switch.
9. Insert AUTO/OFF/ON switch into rectangular notch on wire channel - left.
10. Install rheostat through hole in wire channel and align small tab with small hole.
11. Use an 11/16" wrench to tighten rheostat nut on stationary portion of knob stem of the rheostat. ***NOTICE***: Nut is self-tapping and can be started at an angle.
12. Push rheostat knob onto knob stem until fully seated.
13. Bend the fan control tab, located on the left side of the back of the unit, inward toward the unit. See Figure 26. Be sure tab is bent at least 90 degrees to allow fan control bracket to slide into slot.
14. Attach fan control with bracket onto rear cover with two 10 x 1/2" screws provided in hardware package.
15. Route wires from fan control and ON/OFF/REMOTE switch within wire channel.
16. Attach wire channel to channel divider with two 10 x 1/2" screws from Step 4.
17. Installation of optional CIB3 blower is completed.

Fan Control

The fan control is a non-adjustable automatic type The fan control will require between 5 and 10 minutes of main burner operation before the fan control "closes" and activates the blower. The blower will continue to run between 5 and 10 minutes after the main burner shuts off, before the fan control "opens" and deactivates the blower.

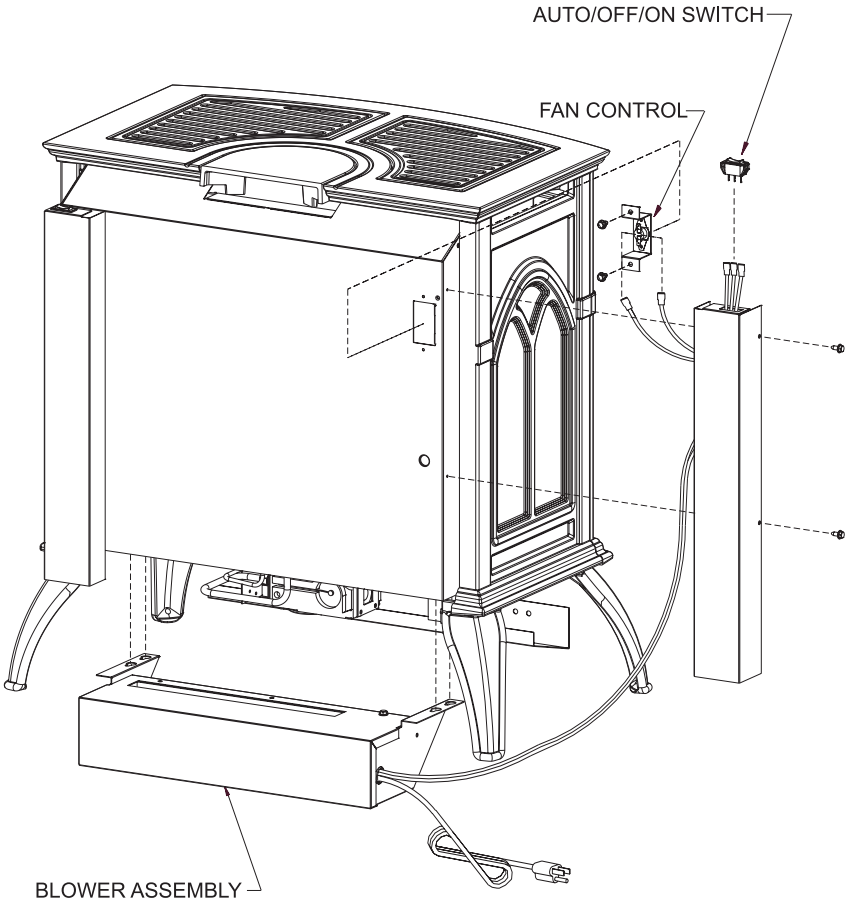

Figure 26 -VFD20CC shown

CIB4-1 OPTIONAL BLOWER INSTALLATION INSTRUCTIONS

Cleaning
The blower wheel will collect lint and could require cleaning once a year. If the air output decreases or the noise level increases, it indicates a dirty wheel.

Blower Motor
The blower motor does not have oiling holes. Do not attempt to oil blower motor.

Wiring
The appliance, when installed, must be electrically grounded in accordance with local codes or, in the absence of local codes, with the *National Electrical Code, ANSI/NFPA 70 or Canadian Electrical Code, CSA C22.1*, if an external electrical source is utilized. **This appliance is equipped with a three-prong (grounding) plug for your protection against shock hazard and should be plugged directly into a properly grounded three-prong receptacle. Do not cut or remove the grounding prong from this plug.** For an ungrounded receptacle, an adapter, which has two prongs and a wire for grounding, can be purchased, plugged into the ungrounded receptacle and its wire connected to the receptacle mounting screws. With this wire completing the ground, the appliance cord plug can be plugged into the adapter and be electrically grounded.

⚠ CAUTION

Label all wires prior to disconnection when servicing controls. Wiring errors can cause improper and dangerous operation. Verify proper operation after servicing.

⚠ WARNING

Unplugging of blower accessory will not stop the heater from cycling. To shut heater off: Turn temperature dial or thermostat to lowest setting. Turn knob on gas control to "OFF," depressing slightly. Do not force.

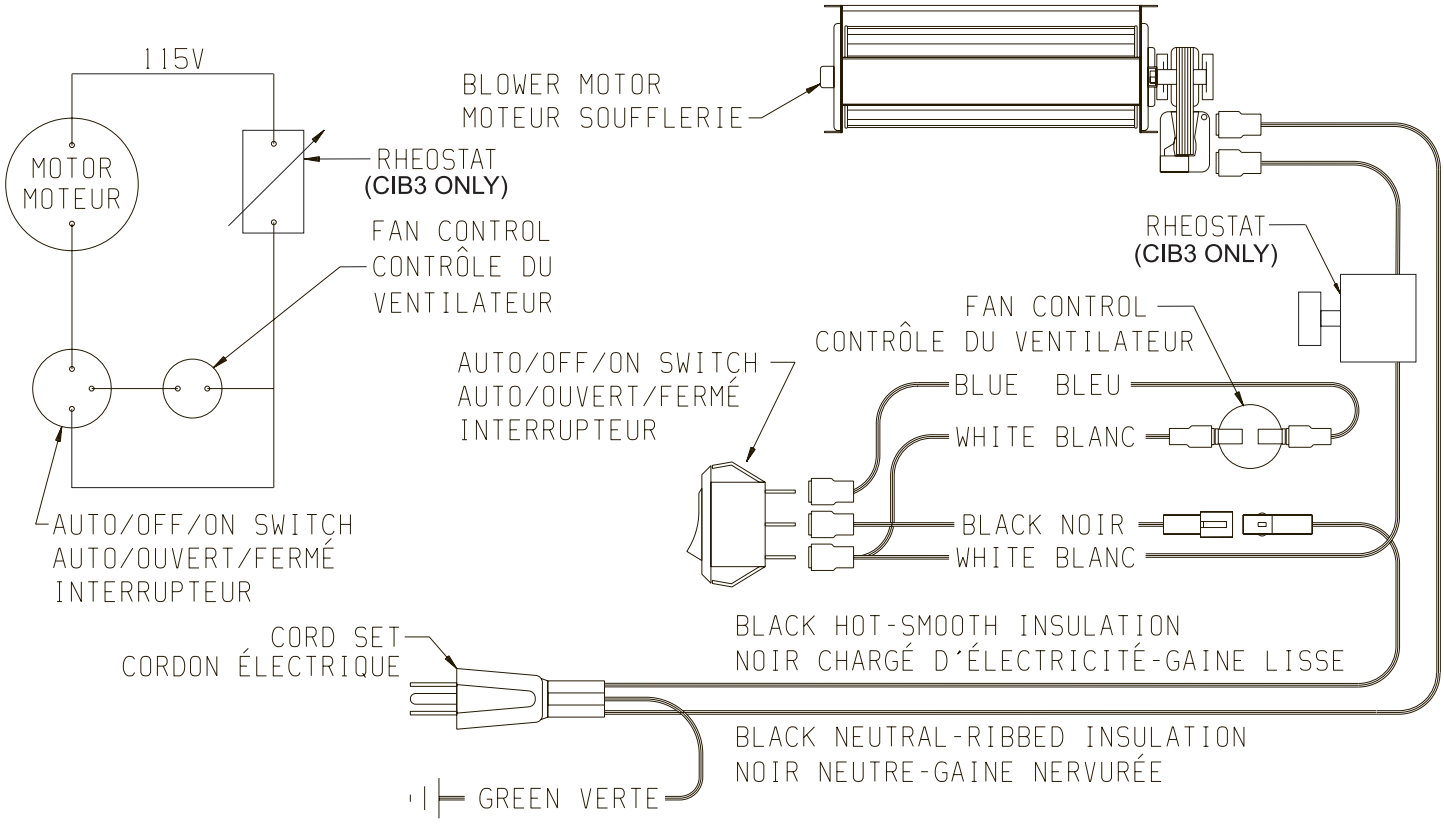

IF ANY OF THE ORIGINAL WIRE AS SUPPLIED WITH THIS UNIT MUST BE REPLACED, IT MUST BE REPLACED WITH NO. 18, 150°C WIRE OR ITS EQUIVALENT.
SI UN DES FILS ÉLECTRIQUES ORIGINAUX, VENANT DU FABRICANT AVEC CETTE UNITÉ, DOIT ÊTRE REMPLACÉ, VOUS DEVEZ LE REMPLACER AVEC UN FIL ÉLECTRIQUE DE NUMÉRO 18, 150°C OU L'ÉQUIVALENT.

Figure 27

CIB3-1 OPTIONAL BLOWER INSTALLATION INSTRUCTIONS

Attention: The CIB3-1 Blower is for use with the VFD30CC Models.

⚠ CAUTION
Sharp edges, use protective gloves when installing.

Installation

1. Loosen, but do not remove, four hex-head screws located on the exterior, bottom of the appliance.
2. Position the blower assembly at the rear of the appliance. The blower assembly has four keyholes for attachment to the exterior, bottom of the appliance.
3. Place the large diameter holes in the keyholes over and behind the four hex-head screws that were loosened in Step 1. Push inward on the blower assembly to lock the keyholes into position behind the screws. Tighten four hex-head screws to secure blower assembly to exterior, bottom of the appliance.
4. Remove wire channel-left from appliance by removing 10 x 1/2" screws on left side of the appliance. **Note:** Some units require a new wire channel. If Rheostat mounting holes are missing from part removed from unit, discard wire channel removed from unit and continue installation with appropriate wire channel shipped with blower. **See Figure 28.**
5. Route fan control wires through rectangular notch on wire channel - left.
6. Attach 1/4" push-on terminal from blue wire on the fan control to the AUTO (top) tab on the switch.
7. Attach 1/4" push-on terminal from black wire to the OFF (middle) tab on the switch.
8. Attach 1/4" push-on terminal from white wire on the fan control to the ON (bottom) tab on the switch.
9. Insert AUTO/OFF/ON switch into rectangular notch on wire channel - left.
10. Install rheostat through hole in wire channel and align small tab with small hole.
11. Use an 11/16” wrench to tighten rheostat nut on stationary portion of knob stem of the rheostat. **Note**: Nut is self-tapping and can be started at an angle.
12. Push rheostat knob onto knob stem until fully seated.
13. Bend the fan control tab, located on the left side of the back of the unit, inward toward the unit. See Figure 28. Be sure tab is bent at least 90 degrees to allow fan control bracket to slide into slot.
14. Attach fan control with bracket onto rear cover with two 10 x 1/2" screws provided in hardware package.
15. Route wires from fan control and ON/OFF/REMOTE switch within wire channel.
16. Attach wire channel to channel divider with two 10 x 1/2" screws from Step 4.
17. Installation of optional CIB3 blower is completed.

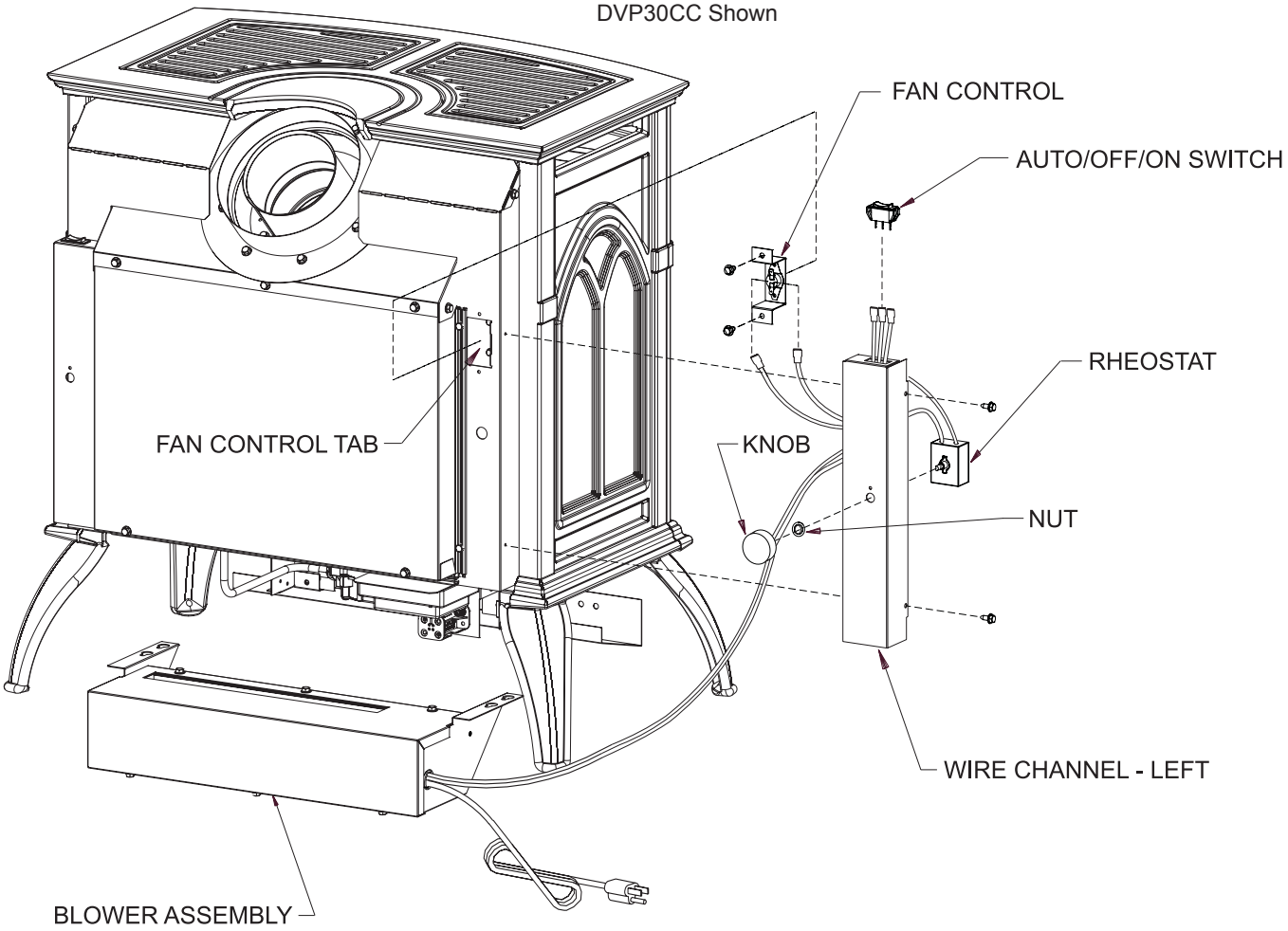

Figure 28 - DVP30CC Shown

CIB3-1 OPTIONAL BLOWER INSTALLATION INSTRUCTIONS

Fan Control
The fan control is a non-adjustable automatic type The fan control will require between 5 and 10 minutes of main burner operation before the fan control "closes" and activates the blower. The blower will continue to run between 5 and 10 minutes after the main burner shuts off, before the fan control "opens" and deactivates the blower.

Cleaning
The blower wheel will collect lint and could require cleaning once a year. If the air output decreases or the noise level increases, it indicates a dirty wheel.

Blower Motor
The blower motor does not have oiling holes. Do not attempt to oil blower motor.

Wiring
The appliance, when installed, must be electrically grounded in accordance with local codes or, in the absence of local codes, with the *National Electrical Code, ANSI/NFPA 70 or Canadian Electrical Code, CSA C22.1*, if an external electrical source is utilized. **This appliance is equipped with a three-prong [grounding] plug for your protection against shock hazard and should be plugged directly into a properly grounded three-prong receptacle. Do not cut or remove the grounding prong from this plug.** For an ungrounded receptacle, an adapter, which has two prongs and a wire for grounding, can be purchased, plugged into the ungrounded receptacle and its wire connected to the receptacle mounting screws. With this wire completing the ground, the appliance cord plug can be plugged into the adapter and be electrically grounded.

⚠ CAUTION

Label all wires prior to disconnection when servicing controls. Wiring errors can cause improper and dangerous operation. Verify proper operation after servicing.

⚠ WARNING

Unplugging of blower accessory will not stop the heater from cycling. To shut heater off: Turn temperature dial or thermostat to lowest setting. Turn knob on gas control to "OFF," depressing slightly. Do not force.

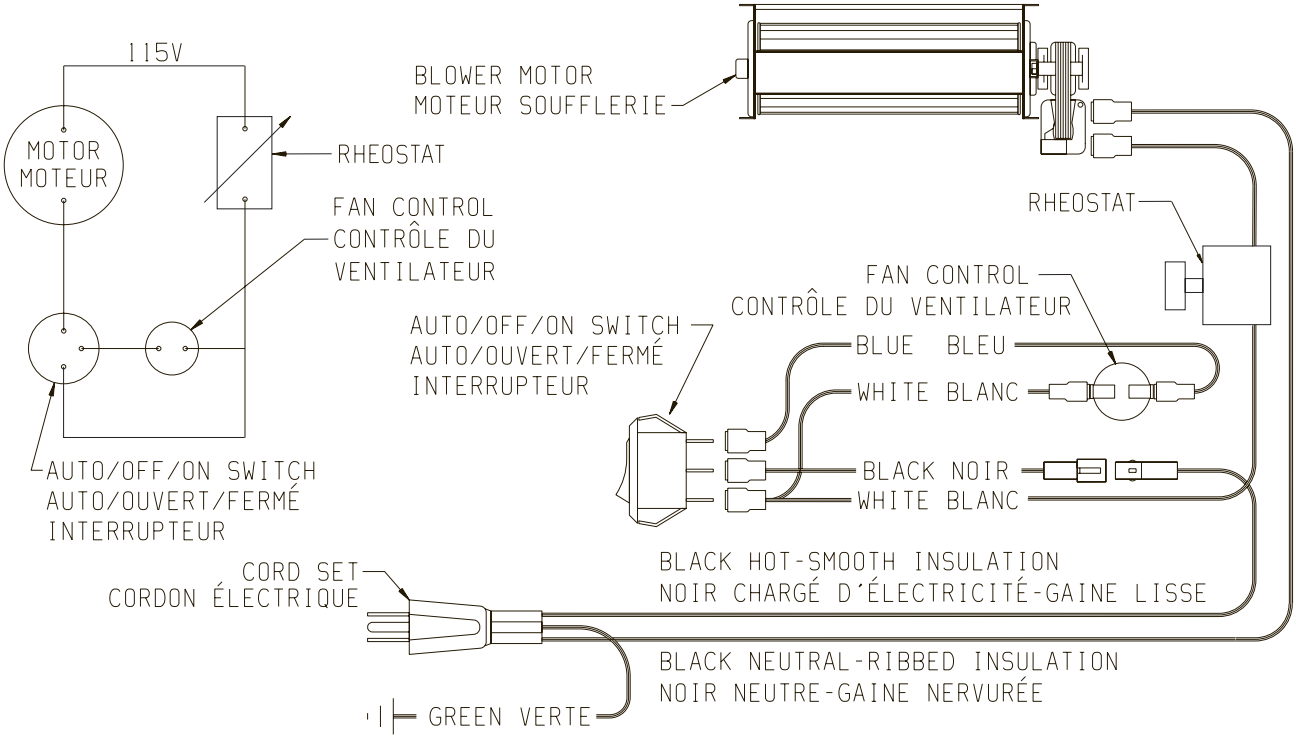

IF ANY OF THE ORIGINAL WIRE AS SUPPLIED WITH THIS UNIT MUST BE REPLACED, IT MUST BE REPLACED WITH NO. 18, 150°C WIRE OR ITS EQUIVALENT.
SI UN DES FILS ÉLECTRIQUES ORIGINAUX, VENANT DU FABRICANT AVEC CETTE UNITÉ, DOIT ÊTRE REMPLACÉ, VOUS DEVEZ LE REMPLACER AVEC UN FIL ÉLECTRIQUE DE NUMÉRO 18, 150°C OU L'ÉQUIVALENT.

Figure 29

WARRANTY

Empire Comfort Systems Inc. warranties this hearth product to be free from defects at the time of purchase and for the periods specified below. Hearth products must be installed by a qualified technician and must be maintained and operated safely, in accordance with the instructions in the owner's manual. This warranty applies to the original purchaser only and is not transferable. All warranty repairs must be accomplished by a qualified gas appliance technician.

Limited Lifetime Parts Warranty with a Five-Year Limited Labor Warranty – Combustion Chamber and Heat Exchanger

If the combustion chamber or heat exchanger (see parts list) fails because of defective workmanship or material, Empire will repair or replace at Empire's option. Within five years from the date of purchase, Empire will pay reasonable labor to have the defective part repaired or replaced at Empire's option.

Limited Five-Year Parts & Labor Warranty – All Other Components
(Except Remote Controls, Thermostats, Accessories and Replacement Parts)

Should any part fail because of defective workmanship or material within five years from the date of purchase, Empire will repair or replace at Empire's option. Within five years from the date of purchase, Empire will pay reasonable labor to have that defect repaired at Empire's option.

Limited One-Year Parts Warranty – Remote Controls, Thermostats, Accessories, and Parts

Should any remote control, thermostat, accessory, or other part fail because of defective workmanship within one year from the date of purchase, Empire will repair or replace at Empire's option.

Duties Of The Owner

The appliance must be installed by a qualified installer and operated in accordance with the instructions furnished with the appliance. A bill of sale, cancelled check, or payment record should be kept to verify purchase date and establish warranty period. Ready access to the appliance for service.

What Is Not Covered

Damages that might result from the use, misuse, or improper installation of this appliance.
Travel, diagnostic costs and freight charges on warranted parts to and from the factory.
Claims that do not involve defective workmanship or materials.
Unauthorized service or parts replacements.
Removal and reinstallation cost.
Inoperable due to improper or lack of maintenance.

How To Get Service

To make a claim under this warranty, please have your receipt available and contact your installing dealer. Provide the dealer with the model number, serial number, type of gas, and purchase verification. The installing dealer is responsible for providing service and will contact the factory to initiate any warranted parts replacements. Empire will make replacement parts available at the factory. Shipping expenses are not covered.

If, after contacting your Empire dealer, service received has not been satisfactory, contact: Consumer Relations Department, Empire Comfort Systems Inc., PO Box 529, Belleville, Illinois 62222, or send an e-mail to info@empirecomfort.com with "Consumer Relations" in the subject line.

Your Rights Under State Law

This warranty gives your specific legal rights, and you may also have other rights, which vary from state to state.

APPLIANCE SERVICE HISTORY

Date	Dealer Name	Service Technician Name	Service Performed/Notes

APPLIANCE SERVICE HISTORY

Date	Dealer Name	Service Technician Name	Service Performed/Notes

EMPIRE
Cast Iron Stoves

Empire Comfort Systems
918 Freeburg Avenue
Belleville, Illinois 62220-2623

Web Site: www.empirecomfort.com

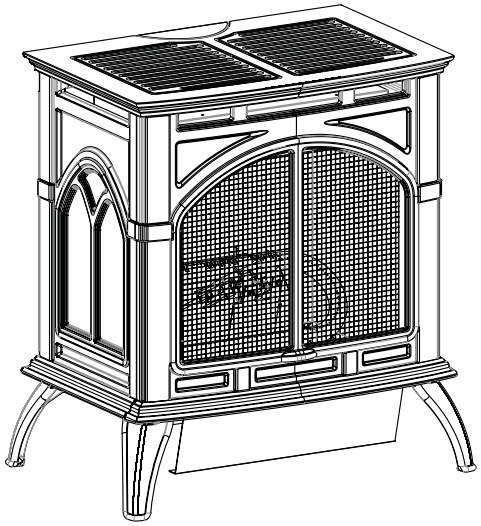

The Empire Cast Iron Stoves
Models:

VFD(10,20)CC(30,70)(B,F,M)N,P)-1 and
VFD30CC(30,70)B,F,M,S,W)(N,P)-1

GAS-FIRED
C UL US
LISTED

Model	"Small"		"Medium"
	VFD10CC	VFD20CC	VFD30CC
Input BTU/HR (KW/H) Maximum (Propane)	10,000	20,000	25,000
Input BTU/HR (KW/H) Minimum (Propane)	10,000	16,000	21,000
Input BTU/HR (KW/H) Maximum (Natural)	10,000	20,000	25,000
Input BTU/HR (KW/H) Minimum (Natural)	10,000	14,500	17,500
Height	24 1/8" (612.8 mm)	24 1/8" (612.8 mm)	27 3/4" (704.9 mm)
Width	21 1/2" (546.1 mm)	21 1/2" (546.1 mm)	28 1/16" (712.8 mm)
Depth	15 3/8" (390.5 mm)	15 3/8" (390.5 mm)	17 1/8" (435.0 mm)
Gas Inlet	3/8" (9.5 mm)	3/8" (9.5 mm)	3/8" (9.5 mm)
Air Shutter Setting (Natural)	1/16"	1/8"	1/16"
Air Shutter Setting (Propane)	1/4"	3/8"	7/16"

EMPIRE Cast Iron Stoves
Empire Comfort Systems
918 Freeburg Avenue
Belleville, Illinois 62220-2623
Web Site: www.empirecomfort.com

The Empire Cast Iron Stoves
Models:

VFD(10,20)CC(30,70)(B,F,M)N,P)-1 and
VFD30CC(30,70)B,F,M,S,W)(N,P)-1

Clearances

In selecting a location for installation, it is necessary to provide adequate accessibility clearances for servicing and proper operation.

Locating the Vent Free Cast Iron Stove
When facing the front of the appliance the following minimum clearances to combustible construction must be maintained.

Top of appliance (ceiling)	36 inches	Heater Corners (45° angle) to Wall	4 inches
Rear Wall	2 inches	Floor	0 inches
Side Wall	6 inches		

Provide adequate clearances around air openings.
Adequate accessibility clearances for purposes of servicing and proper operation must be provided.

Installation on Rugs and Tile
This appliance must be installed on a flat, solid, continuous surface (e.g. wood, metal, concrete). This may be the floor, or it may be raised up on a platform to enhance its visual impact. The appliance may be installed on carpeting, vinyl, wood flooring or other combustible material.

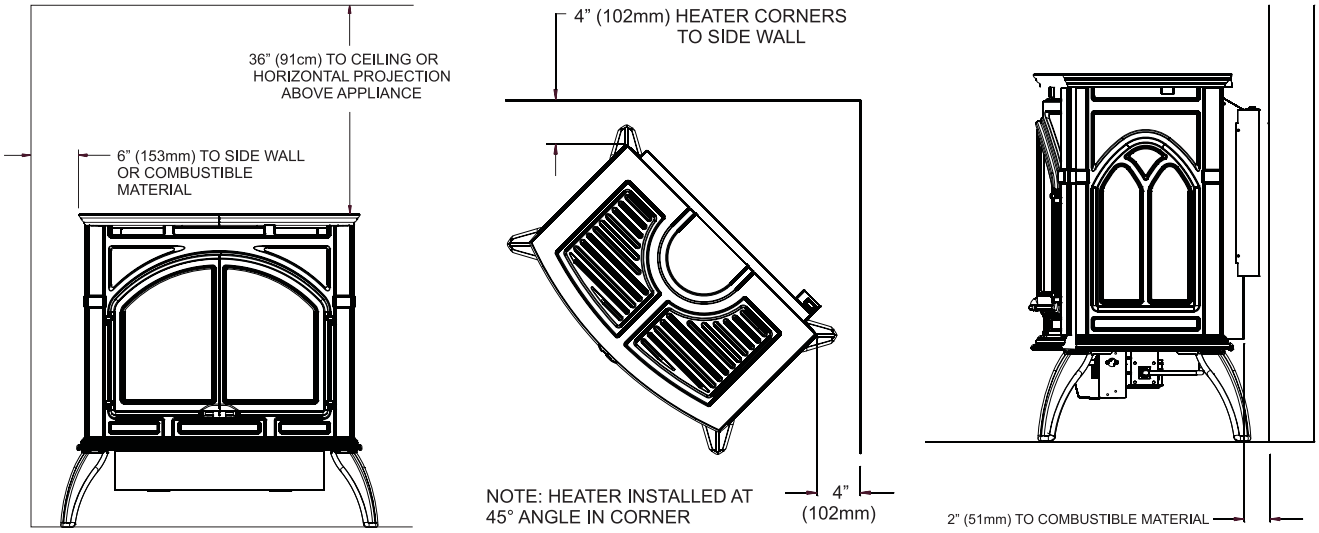

Empire Comfort Systems Inc.
Belleville, IL

If you have a general question about our products, please e-mail us at info@empirecomfort.com.

If you have a service or repair question, please contact your dealer.

www.empirecomfort.com