This Owner's Manual is provided and hosted by Appliance Factory Parts.

Appliance Factory Parts
Experts in BBQ, Humidifier, & Appliance Parts
1-800-955-7075

Landmann 43103 Owner's Manual

Shop genuine replacement parts for Landmann 43103

Find Your Landmann Grill Parts - Select From 200 Models

-------- Manual continues below part list --------

Available Replacement Parts for Landmann 43103

PF0001	RUBBER BUMPER PTS-18
PF0027	LID HANDLE INSULATION WASHER
PF0031	RIGHT MAIN BURNER MOUNTING
PF0038	MAIN BURNER CONTROL KNOB BEZEL
PF0045	FLAME TAMER SUPPORT PIN PTS-18
PF0050	WARMING RACK RIGHT BRACKET
PF0059	LID HINGE BOLT & NUT PTS-18
PF0074	REAR BUYRNER SS FLEX GAS LINE
PF0075	REAR BURNER ELECTRODE & WIRE
PF0077	REAR BURNER CONTROL KNOB BEZEL
PF0078	PF0078.REAR BURNER CONTROL KNOB
PF0083	REAR BURNER IGNITIION COVER
PF0149	4B NG CONVERSION KIT W/ TOOL
PF0150	4B LP CONVERSION KIT W/ TOOL
PF0010	LP HOSE & REGULATOR
PF0020	LOWER HEAT SHIELD
PF0021	FLAME TAMER PTS-18
PF0024	TEMPERATURE GAUGE BEZEL
PF0025	TEMPERATURE GAUGE
PF0030	LID SUPPORT RIGHT BRACKET
PF0032	MAIN BURNER PIN PTS-18
PF0035	REGULATOR BRACKET PTS-18
PF0037	COOKING GRATE SUPPORT PIN
PF0039	MAIN BURNER CONTROL KNOB
PF0040	LOGO PLATE
PF0046	COOKING GRATE SUPPORT PIN
PF0047	MAIN BURNER PTS-18
PF0048	FLAME CROSSER PTS-18
PF0049	LEFT MAIN BURNER MOUNTING
PF0051	WARMING RACK LEFT BRACKET

PF0052	LID SUPPORT LEFT BRACKET
PF0060	R CLIP PTS-18
PF0068	4B DRIP TRAY
PF0069	4B COOKING GRATE
PF0070	4B WARMING RACK PTS-18
PF0071	4B LID PTS-18
PF0073	REAR BURNER BACK COVER
PF0076	4B GRILL BODY BACK BRACE
PF0079	4B CONTROL PANEL
PF0084	4B REAR BURNER PTS-18
PF0141	FLAME CROSSER PIN PTS-18

LANDMANN
PROFESSIONAL

Intertek

ASSEMBLY, CARE AND USE INSTRUCTIONS
READ CAREFULLY

This appliance is for Household use only.

This is not a commercial appliance.

IMPORTANT:
RETAIN THESE INSTRUCTIONS FOR FUTURE REFERENCE

Ardor Built in Gas Grill

MODELS: 43100, 43101, 43102, 43103, 43104 & 43105

Questions, problems, missing parts? Before returning to your retailer, call our customer service department at: 1-800-321-3473 8:00 AM - 5:00 PM (EST) English Only, or Email CustomerService@landmann-usa.com

Table of Contents

Important Safety Information 2
General Safety Requirements.....4
Liquid Propane (LP) Safety Information..... 5
Package Contents..... 6
BBQ Specifications.....9
Assembly Instructions.....11
Location of Appliance.....13
Grilling in Windy Conditions.....14
Installing the Appliance in a BBQ Island 15
Gas Connections 17
Checking for Gas Leaks 21
Main Burner Lighting Instrustions 22
Care and Maintenance..... ..... .23
Cooking Methods and Grilling Tips..... 24
Using the Rotisserie Burner..... 25
Maintenance & Cleaning 27
Troubleshooting..... 29
Grilling Guidelines 30
Gas Conversion 32
Replacement Parts 37
Warranty 43

Assembler/Installer

This instruction manual contains important information necessary for the proper assembly and safe use of this appliance. Read and follow all warnings and instructions before assembling and using this appliance.

Leave these instructions with the consumer.

Consumer/User

Follow all warnings and instructions when using this appliance.

Keep these instructions for future reference.

DANGER

If you smell gas:

1. **Shut off gas to the appliance.**
2. **Extinguish any open flame.**
3. **Open lid.**
4. **If odor continues, keep away from the appliance and immediately call your gas supplier or your fire department.**
5. **Failure to follow these instructions could result in explosion, or burn hazard which could cause property damage, personal injury or death.**

WARNING

1. **DO NOT** store or use gasoline or other flammable liquids or vapors in the vicinity of this or any other appliance.
2. An LP (liquid propane) cylinder not connected for use should not be stored in the vicinity of this or any other appliance.
3. This grill is **FOR OUTDOOR USE** only and shall not be used in a building, garage, under overhangs or any other enclosed area.
4. **DO NOT** leave a lit grill unattended. Keep children and pets away from the grill at all times.
5. **This appliance is for Household use only. This is not a commercial appliance.**

Important Safety Information

CAUTION

Warnings and Cautions contained in this instruction manual may result in serious bodily injury or death, or may result in a fire or explosion causing damage to property.

- Make sure to follow all assembly instructions carefully. Improper assembly of this grill may be dangerous.
- **NEVER** use charcoal, lighter fluid, gasoline, kerosene or alcohol to ignite this grill.
- When igniting the grill or cooking, **DO NOT** lean over the open grill.
- Always open the grill lid slowly and carefully as heat trapped inside the grill can cause severe burns.
- **DO NOT** place hands or fingers at edge of the firebox when the lid is open or the grill is hot.
- Keep children and pets away from the grill when in use. Accessible parts may be very hot.
- **DO NOT** attempt to disconnect the gas regulator and hose assembly or any gas fitting while your grill is operating.

Important Safety Information

- This grill **SHOULD NOT** be located under any overhead unprotected combustible construction. Always allow at least 36" from the top, bottom, back and 36" from the sides of the grill.
- This grill is an outside appliance and **SHOULD NOT** be operated in a building, garage, or any other enclosed area.
- **DO NOT** obstruct the flow of combustion and ventilation air. Keep the ventilation openings of the cylinder enclosure free and clear of debris.
- Should the burners go out while the grill is in operation, turn all gas valves off. Open the lid and wait five minutes before attempting to relight the grill, using the igniting instructions.
- Keep this grill clear and free from combustible material, gasoline and other flammable vapors and liquids.
- **NEVER** store an extra or disconnected liquid propane cylinder under or near this grill.
- Always use heat-resistant barbecue mitts or gloves when operating the grill.
- **DO NOT** leave a hot grill unattended or move it during operation.
- This grill is not intended to be used in or installed on recreational vehicles, boats, portable trailers, or in any moving location.
- **DO NOT** put a grill cover or anything flammable on the grill while the grill is in operation or is hot.
- Storage of an outdoor cooking gas appliance indoors is permissible only if the cylinder is disconnected and removed from the outdoor cooking gas appliance.
- When the grill is not in use, make sure the gas is turned • **OFF** at the gas supply.
- Cylinders must be stored outdoors and out of the reach of children. Cylinder must not be stored in a building, garage or other enclosed areas.
- Always inspect the gas supply hose before every use. If the hose shows any signs of abrasions or cuts, **DO NOT** use the grill. The hose must be replaced before using again.
- Always check the burners and venturi tubes for insects and insect nests. A clogged tube can lead to a fire beneath the grill.
- Always check the connections for leaks each time you connect and disconnect the LP gas supply cylinder.

CAUTION	The pressure regulator and hose assembly supplied with LP grills must be used. Any requirements for a replacement regulator and hose assembly must be made through the manufacturer, LANDMANN-USA.

- Gas cylinders must include a collar to protect the cylinder valve.
- Dented or rusty LP gas cylinders may be hazardous and need to be checked by your LP gas supplier.
- **DO NOT** use LP gas cylinders with a damaged valve.
- **DO NOT** enlarge the valve orifices or burner ports when cleaning the valves or burners.
- If you see, smell or hear hissing of gas escaping from the LP gas cylinder, move away from the LP gas cylinder. **DO NOT** attempt to correct the problem yourself and call the fire department.
- If a grease fire occurs, turn • **OFF** all burners and leave the lid closed until the fire is out.
- **DO NOT** alter this grill in any manner. Any alteration automatically voids the warranty.
- **DO NOT** use the grill in high wind situations.

The LP gas supply cylinder to be used must be constructed and marked in accordance with the Specification for LP Gas Cylinders of the U.S. Department of Transportation (DOT) or the National Standard of Canada, CAN/CSA-b339 (Cylinders, Spheres, and Tubes for transportation of Dangerous Goods).

The LP gas cylinder must be:

– provided with a listed overfilling prevention device
– provided with a cylinder connection device compatible with the connection for outdoor cooking gas appliances.

DANGER	**A fire causing death or serious injury may occur if the following is not followed exactly:** **NEVER** store or use gasoline or other volatile substances in the vicinity of this grill. **NEVER** store a spare propane cylinder in the vicinity of this grill, or in the vicinity of another potential heat source. **NEVER** fill the propane cylinder beyond 80% full.

WARNING	**DO NOT store spare gas cylinder in or near grill.** Place dust cap on cylinder valve outlet whenever the cylinder is not in use. Install only the type of dust cap on cylinder valve outlet that is provided with the cylinder valve. Other types of caps or plugs may result in leakage of propane.

GENERAL SAFETY REQUIREMENTS

1. The installation of this appliance must conform with local codes or, in the absence of local codes; either the National Fuel Gas Code, ANZI Z223.1/NFPA 54, or the CAN/CGA-B149.1, Natural Gas Installation Code or CAN/CGA-B149.2, Propane Installation Code.

2. This outdoor cooking gas appliance is not intended to be installed in or on recreational vehicles and /or boats.

3. This outdoor cooking gas appliance is intended for use outdoors and shall not be used in a building, garage or any other enclosed area.

4. Minimum clearance of 36 inches from the back and sides of the grill to adjacent combustible construction must be maintained. This outdoor cooking gas appliance shall not be located under overhead-unprotected combustible construction.

5. The utilization of an external electrical source requires that when installed, this outdoor cooking gas appliance must be electrically grounded in accordance with the local codes or, in the absence of local codes, with the National Electrical Code, ANSI/NFPA 70, or the Canadian Electrical Code, CSA C22.1. Keep any electrical supply cord, or the rotisserie cord and the fuel supply hose away from any heated surfaces.

6. Keep your grill in an area clear and free from combustible materials, gasoline and other flammable vapors and liquids.

7. DO NOT obstruct the flow of combustion and ventilation air to this appliance. Keep the ventilation openings of the cylinder enclosure free and clear from debris.

8. Check all gas connections for leaks with soapy water solution and brush. Never use an open flame. (Reference page 29 for leak test procedure).

9. Check flexible hoses for cuts and wear that may affect the safety before each use.

10. Never use charcoal in the grill.

11. Never use the grill in a windy area.

12. Never use the grill without the drip pan installed and pushed all the way to the back of the grill.
Without the drip pan, hot grease and debris could leak downward and produce a fire hazard.

13. The pressure regulator and hose assembly supplied with the Landmann Gas Grill must be used.
Replacement pressure regulators and hose assemblies must be those specified by Landmann.

14. CALIFORNIA PROPOSITION 65-WARNING: The burning of gas cooking fuel generates some by-products which are on the list of substances known by the State of California to cause cancer or reproductive harm. California law requires businesses to warn customers of potential exposure to such substances. To minimize exposure to these substances always operate this unit according to the use and care manual, ensuring you provide good ventilation when cooking with gas.

WARNING	**CHECK TO ENSURE THAT THE GAS SUPPLY HOSE DOES NOT COME IN CONTACT WITH ANY HOT SURFACE OF THE GRILL.**

Liquid Propane (LP) Safety Information

Please review the below guidelines and safety information when using Liquid Propane (LP) gas.

General Information

- This grill is designed to be used with a standard 20 lb. LP gas cylinder.
- Any brand of 20 lb. LP gas cylinder is acceptable for use on this grill, provided that the tank is secured properly with a retention device.

Safety Information

- LP gas has an odor similar to natural gas.
- LP gas is heavier than air and leaking gas may collect in low areas and resist dispersion.
- LP cylinders must be installed, transported and stored in an upright position.
- LP cylinders should not be dropped or handled roughly.
- **DO NOT** use a damaged LP cylinder. A dented or rusty LP cylinder or an LP cylinder with a damaged valve may be hazardous and should be replaced with a new cylinder immediately.
- **ALWAYS** close the cylinder valve after use.
- **ALWAYS** close the cylinder valve when disconnecting the regulator.
- **ALWAYS** treat possible empty LP cylinders with the same care as a full LP cylinder. There may still be gas pressure inside a possible empty LP cylinder.
- **NEVER** store or transport an LP cylinder where the temperature can reach 125ºF.
- Keep LP cylinders away from children and pets.
- **DO NOT** store disconnected LP cylinders in a building, garage or other enclosed areas.
- If the LP cylinder is kept in the grill between uses, make sure to keep both the grill and the cylinder in an outdoor area with good ventilation.
- **ALWAYS** leak test the LP cylinder connection to the regulator whenever changing LP cylinders.

Installation of LP Cylinder

1. Maker sure all burner controls are in the **OFF** position.
2. Open the cabinet door or access panel.
3. Carefully position in the cabinet.
4. Properly secure the LP cylinder in place using a retention device.
5. Attach the regulator to the cylinder by carefully **HAND TIGHTENING** only.
6. **NEVER** use a wrench or other tool to tighten this connection.
7. Observe all governing codes and ordinances.

Important

The United States LP gas appliance installation must conform with local codes and ordinances. In the absence of local codes, appliance installation must conform with either the National Fuel Gas Code, ANSI Z223.1/NFPA54, Natural Gas and Propane Appliance code, CSA B149.1, or Propane Storage and Handling Code, B149.2, as applicable.

For Canada, installation of this grill must comply with local codes and/or Standard CSA-B149.2 (Propane Storage and Handling Code).

Always check the rating plate to verify that the appliance is the correct gas type for the gas supply that you are connecting to. A natural gas grill requires natural gas to operate and an LP gas grill requires liquid propane to operate.
The rating plate can be found on the bottom of the grill control panel.

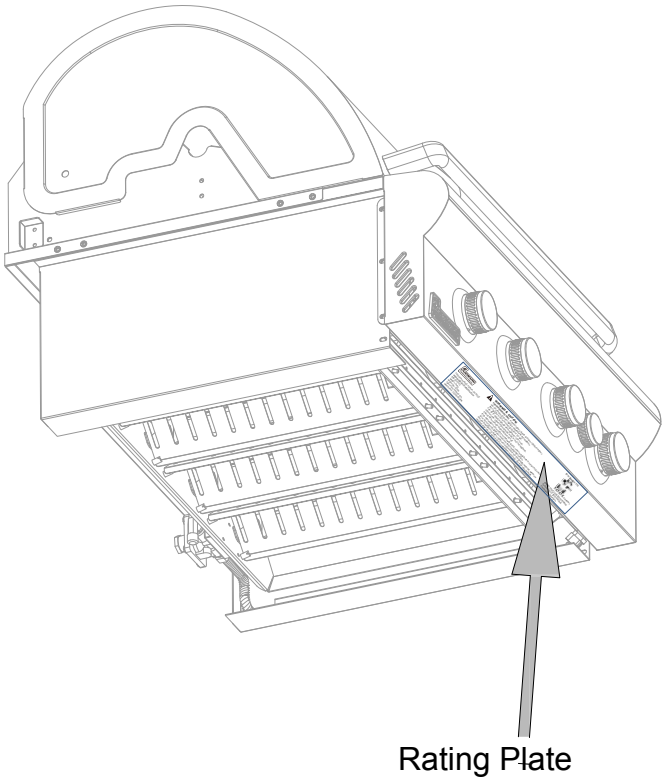

Package Contents

Models: 43100 & 43101

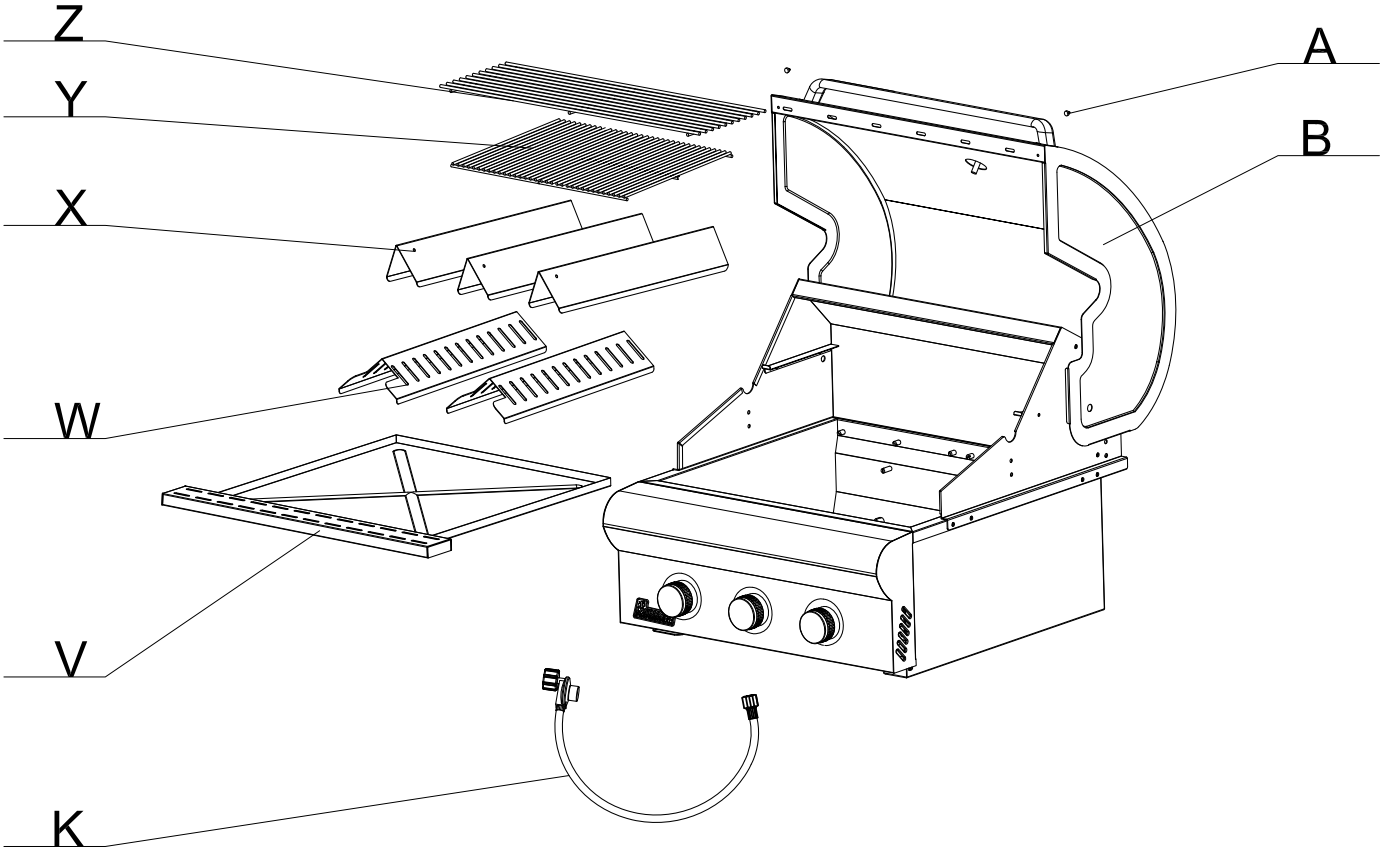

Part	Description	Quantity
A	Rubber Bumper	2
B	3B Grill lid & firebox assembly	1
K	LP hose & regulator (LP model 43100 only)	1
V	Drip Tray	1
W	Lower heat shield	2
X	Flame tamers	3
Y	Cooking Grate	2
Z	Warming Rack	1

Package Contents

Model: 43102 & 43103

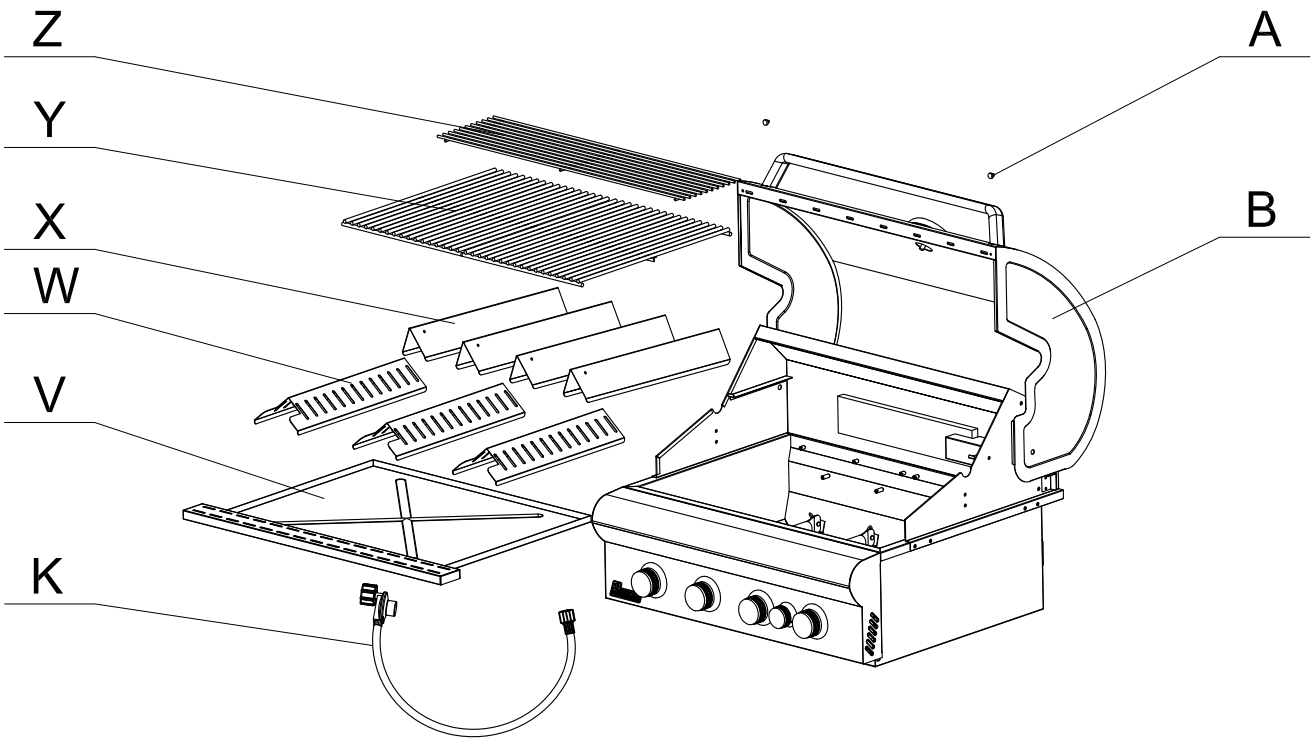

Part	Description	Quantity
A	Rubber Bumper	2
B	4B Grill lid & firebox assembly	1
K	LP hose & regulator (LP model 43102 only)	1
V	Drip Tray	1
W	Lower heat shield	3
X	Flame tamers	4
Y	Cooking Grate	2
Z	Warming Rack	1

Package Contents

Model: 43104 & 43105

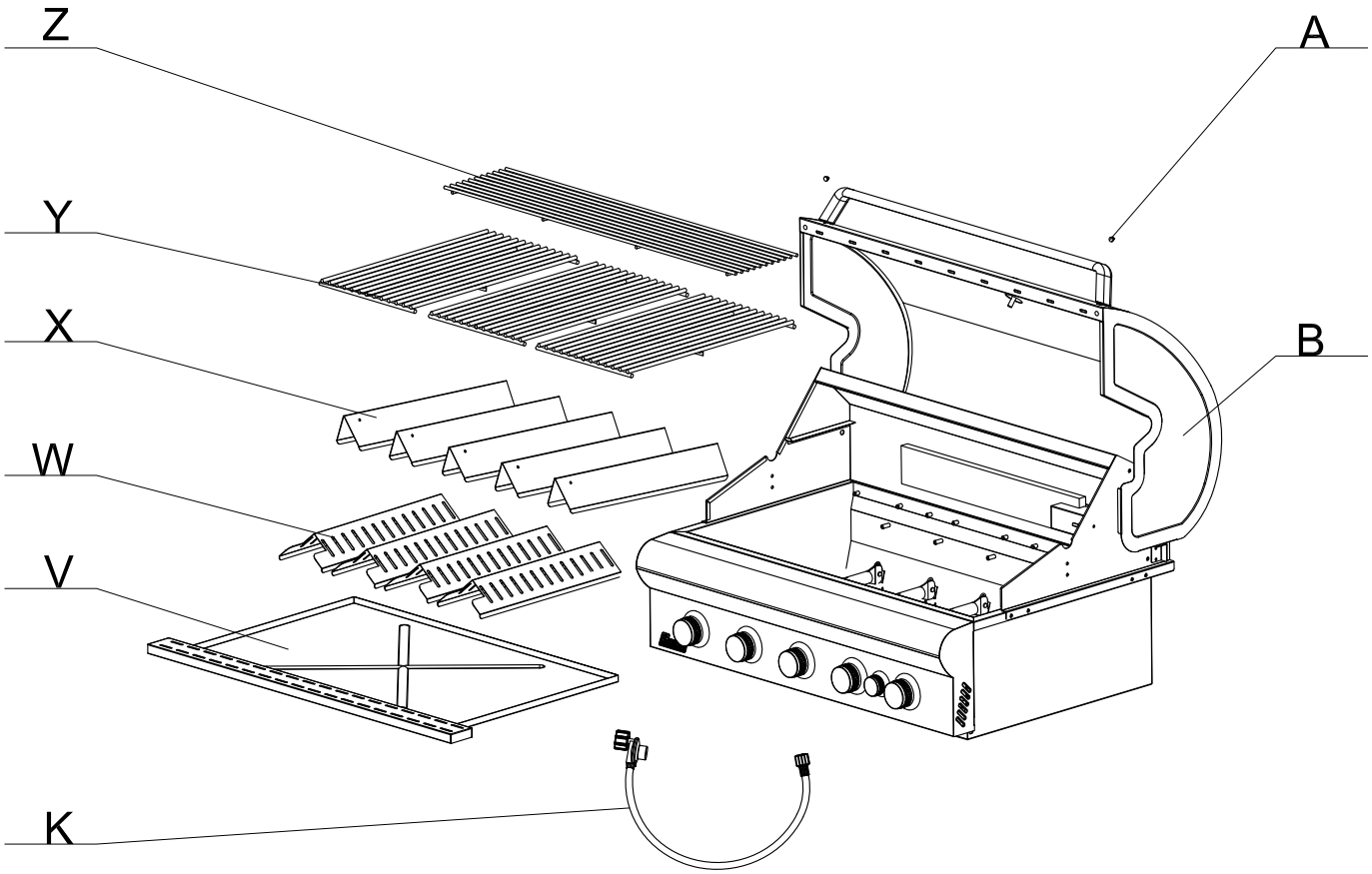

Part	Description	Quantity
A	Rubber Bumper	2
B	5B Grill lid & firebox assembly	1
K	LP hose & regulator (LP model 43104 only)	1
V	Drip Tray	1
W	Lower heat shield	4
X	Flame tamers	5
Y	Cooking Grate	3
Z	Warming Rack	1

BBQ Specifications

NOTE: "ALWAYS" have equipment measured by Contractor before constructing any island or enclosure.

Built in 3 Burner

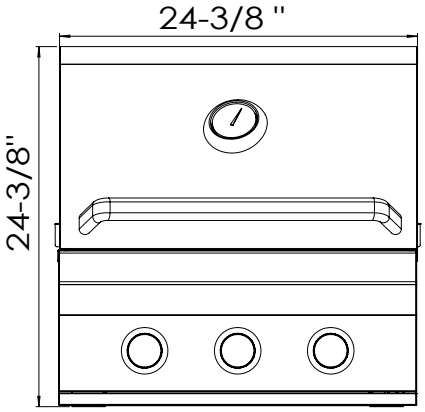

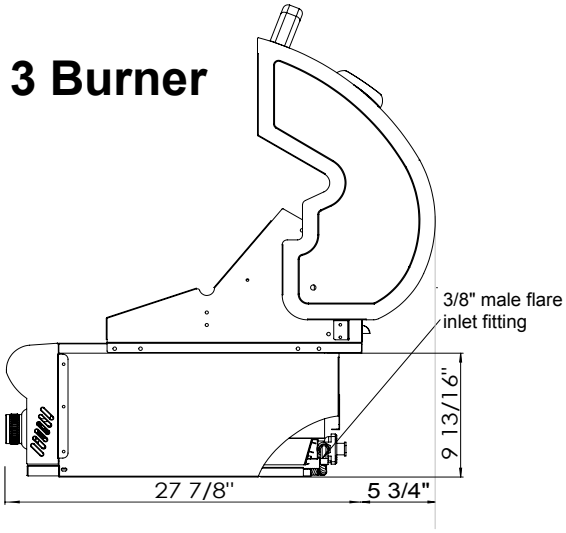

Built in 4 Burner

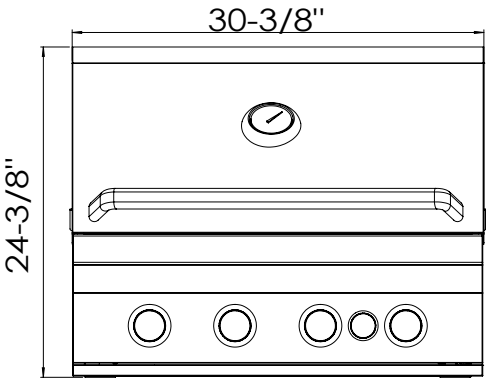

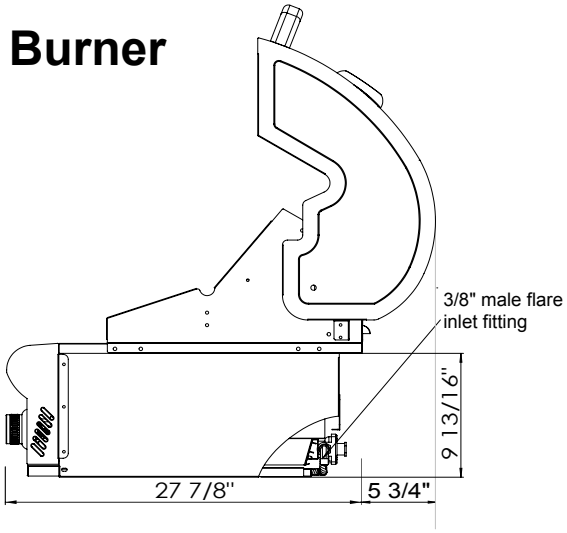

Built in 5 Burner

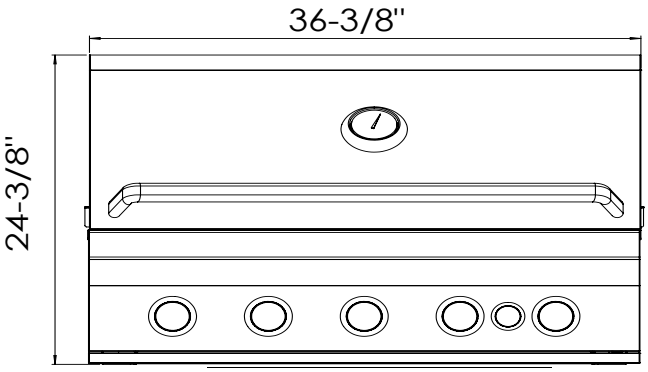

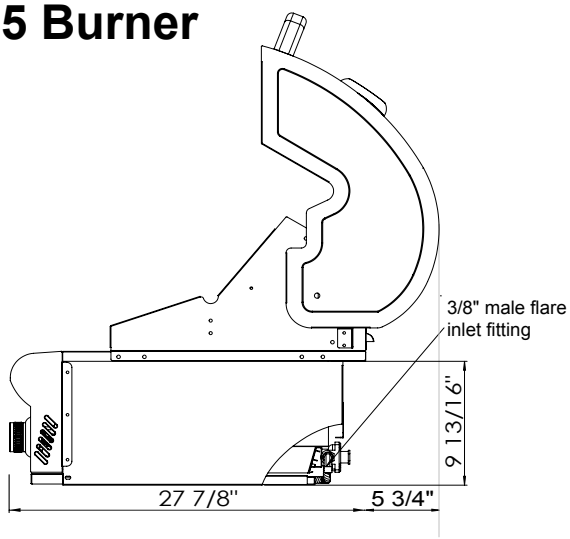

Do not use these dimensions for island construction, use diagrams on page 16.

BBQ Specifications

Get familiar with the knobs and which burners they control.

3 Burner

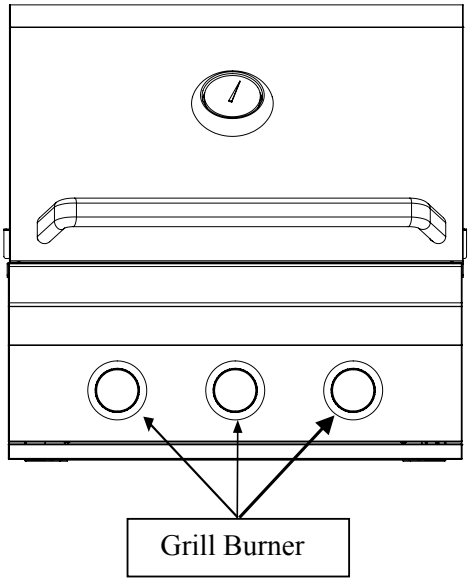

4 Burner

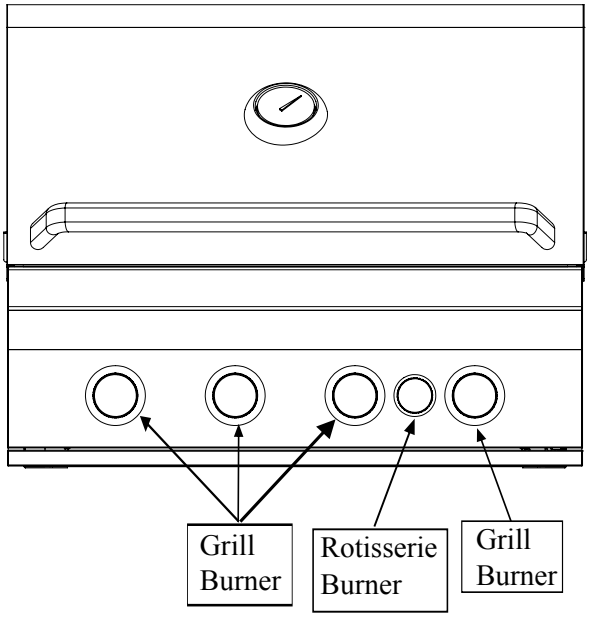

5 Burner

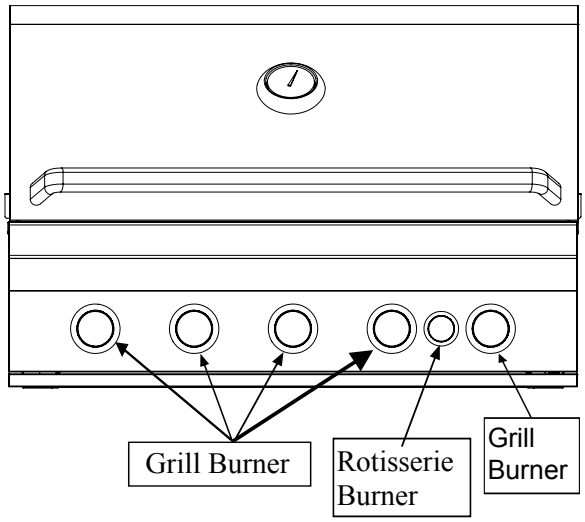

Assembly Instructions

1. Parts needed - W

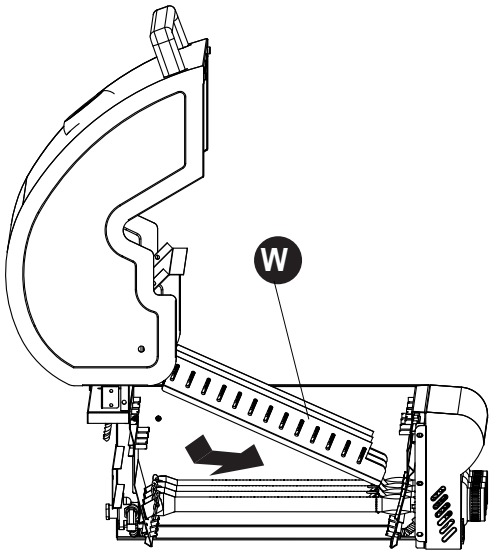

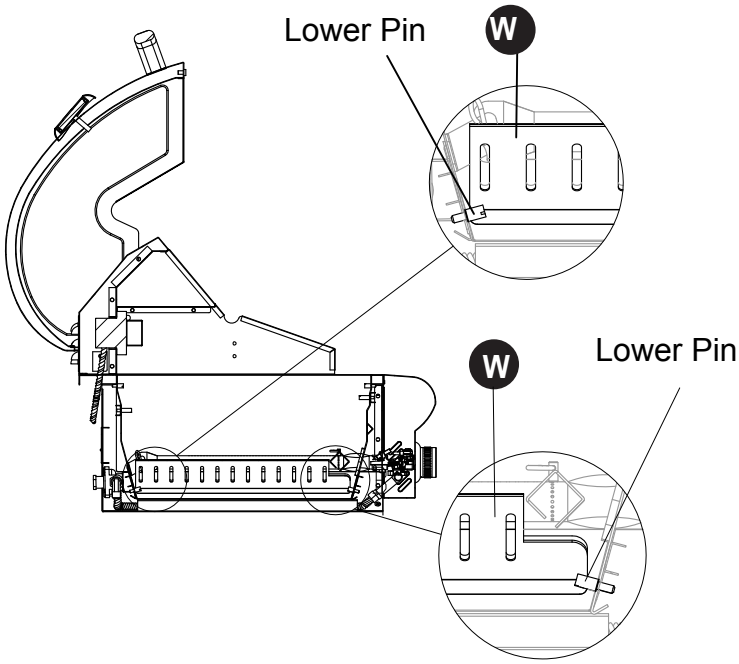

2 Parts needed - X

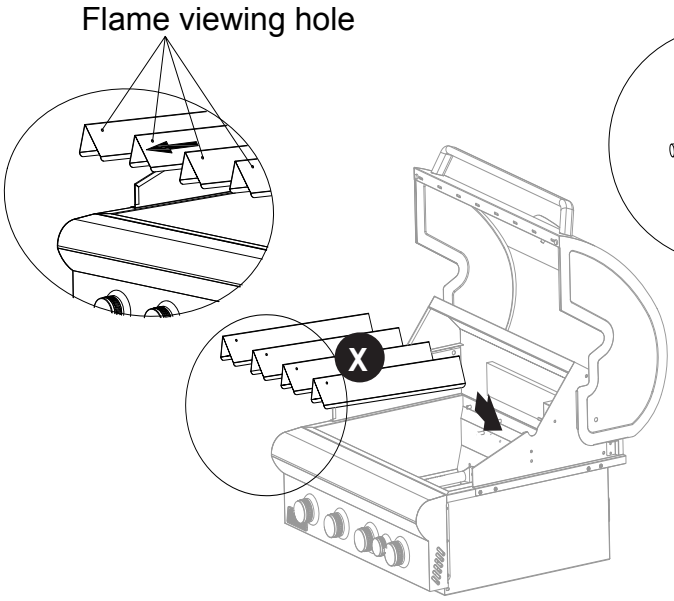

3 Parts needed - A, Y

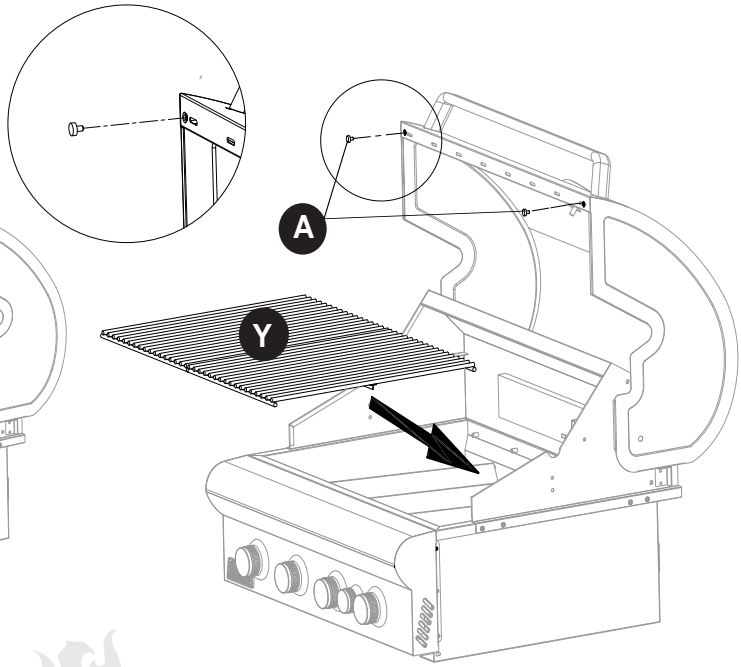

Assembly Instructions

4 Parts needed - Z

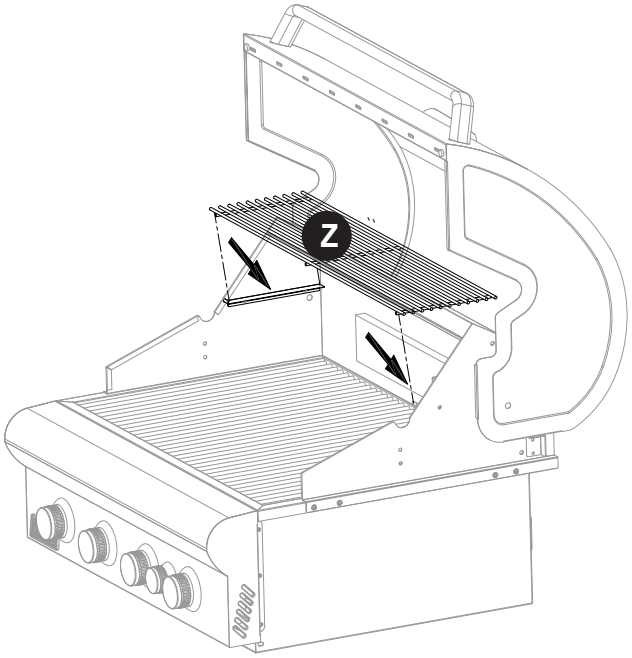

6 Parts needed - K

Included with LP models only

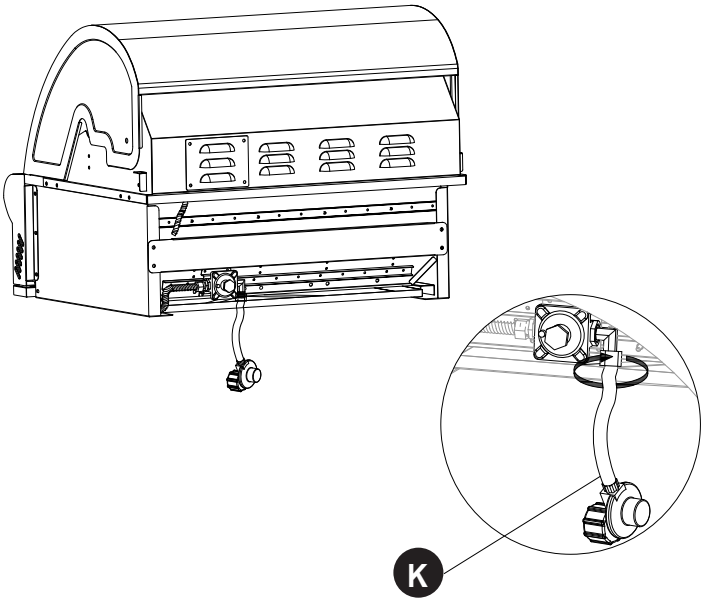

5 Parts needed - V

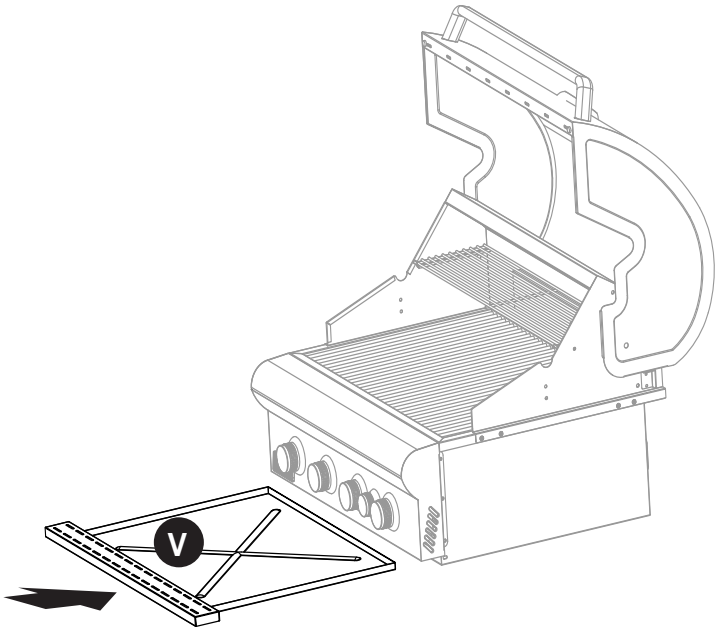

7

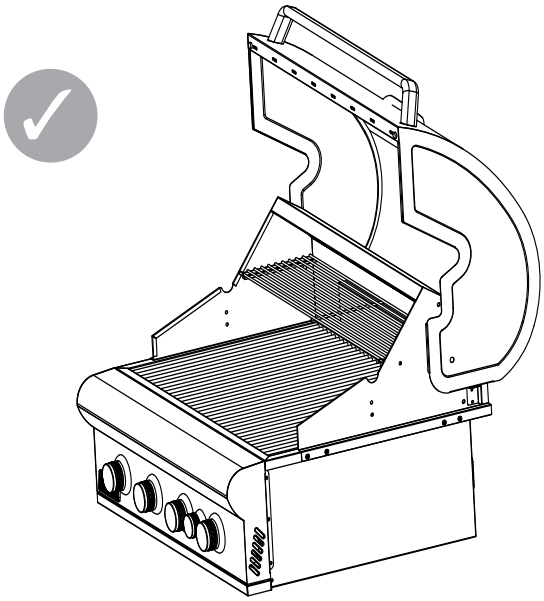

Location of Appliance

Most importantly, this is an outdoor appliance. Ensure your appliance is positioned safely away from anything that can catch fire.

Under no circumstance is this appliance to be used indoors. This includes garages or any other enclosed area.

- **Clearance from Combustibles:**
  Ensure your appliance remains at a distance of at least 36” from any combustible material such as wood, sheetrock, paper and plants. Do not store combustible materials, gasoline or flammable liquids or vapors around the appliance.
- **Adequate Ventilation:**
  Ensure there is adequate ventilation for both the appliance, grill cart and/or island cavity. This is required not only for proper combustion, but also to prevent gas build up.
- **Firm Level Surface:**
  Use your appliance only on a firm level surface. This grill is not designed for recreational vehicles, and should not be installed on a boat or marine craft.
- **Maintenance Access:**
  When your appliance is installed, you should be able to access the gas supply line including the gas piping or hose, gas regulator, gas cylinder and any shut off valves.
- **Partial Enclosures:**
  Many backyards have areas that are partially closed off, such as balconies and pergolas. In some cases, it is hard to decide whether these partially enclosed areas should be classified as indoor areas, particularly in terms of permanent (non-closable) ventilation. Always consult your local housing authority, building inspector or contractor for clarification before proceeding with any construction.

Please read all instructions before installing or operating your gas appliance to prevent injury and appliance damage.

- All gas appliances will get hot during use. Use extreme caution when operating the appliance.
- Do not touch hot surfaces. Always use the handle to open or close the appliance.
- Close supervision is necessary when this or any appliance is used near children. Keep children away from the appliance during operation and until the appliance has cooled off.

Grilling in Windy Conditions

Outdoor grills produces more heat than interior kitchen ranges. That is how they sear and grill steaks and other food.

These high performance burners requires a constant steady supply of fresh air to mix with fuel. The grill is designed to pull air in through the front and vents hot gases out through the rear.

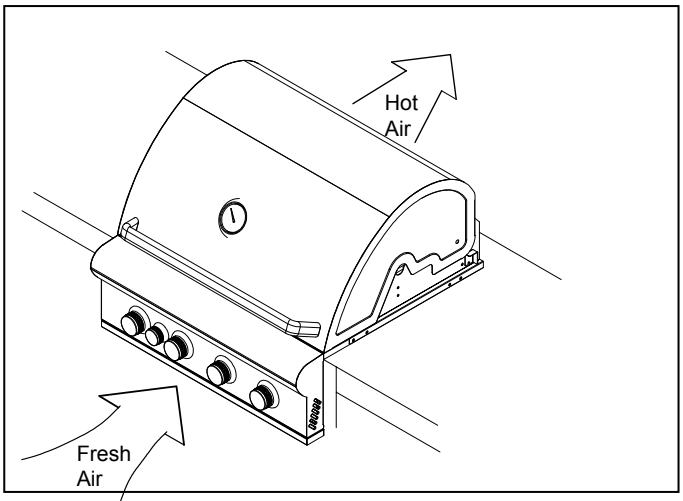

Using the grill in windy conditions may disrupt the front-to-back air flow. If you notice the temperature gauge fail to rise while the burner setting is on high and hood is closed, be extremely careful.

If wind has kept hot gases from exiting the rear of the grill, the control panel and knobs may become extremely hot!

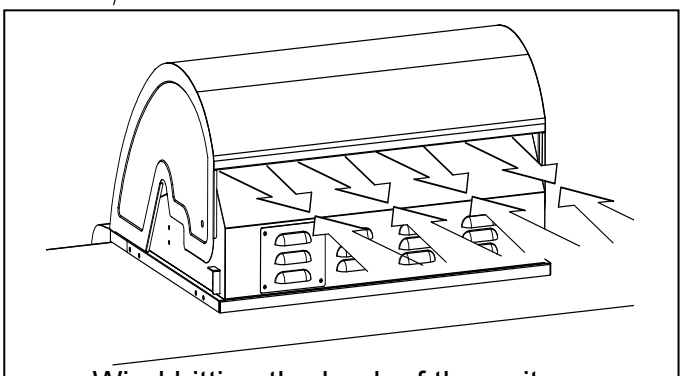

Wind hitting the back of the unit can disrupt proper air flow.

There are few things you can do to further prevent the possibility of improper heat buildup:

- On breezy days, do not to leave the lid down for more than 15 minutes when burners are on high. **(Never leave the grill unattended when in operation.)**
- If you suspect the grill is overheating, open the lid using an oven mitt. Then adjust the burner control knobs to a lower setting.
- Install your grill with a wind break behind it.
- Orient the grill so prevailing winds are not blowing into the rear of the grill.

WARNING

ANY DAMAGE CAUSED FROM USE IN WINDY CONDITIONS, SUCH AS MELTED KNOBS OR IGNITER WIRES, OR FRONT PANEL DISCOLORATION FROM HEAT BUILDUP IS EXCLUDED FROM WARRANTY COVERAGE.

Installing the Appliance in a BBQ Island

Always check with local building codes, fire inspectors, neighborhood association and local contractors before constructing an island. A permit may be required for building any outdoor kitchen.

You will need a second person to help you avoid damaging the appliance or your appliance island.

The island must be made out of non-combustible materials. In the event it is combustible, the use of an insulated jacket is required. Minimum clearance to adjacent combustible construction is 36" from sides & 36" from back.

Before installing an appliance in any island cut out, make sure that the opening is not bigger than the outside frame of the appliance. The appliance should rest on the lip of the frame. Pay careful attention to the location of the gas line. It should be routed away from sources of heat, sharp edges and should make as few bends as possible.

Check to verify the gas line connection will be accessible when the appliance is installed.

If the gas line connection is not easily accessible when the appliance is installed, support the appliance above counter level and attach the gas line to the appliance. When the gas connection is made, slide the appliance into the cut out. If the gas line connection is accessible when the appliance is installed, slide the appliance into the cut out and then attach the gas line. Be very careful not to kink the gas line when lowering the appliance into the cut out.

Keep your fingers away from where the appliance will be supported on counter. Your fingers could become trapped and serious injury could occur.

Check to make sure the appliance is level and is supported around the entire outside edge. If the appliance is not level or is unstable, use non-combustible shims under the outside lip to stabilize it.
Make sure to perform the leak test procedure as described in this manual.

Built in Installations

NOTE: Landmann built in grills are intended either for installation in a built in enclosure constructed of non-combustible materials or for an installation in a built in enclosure constructed of combustible material when installed with a Landmann insulated jacket .

For non-combustible applications, the grill drops into the opening shown in the cutout detail drawing (See Cutout Dimensions for Built In Grills on page 16) and hangs from its counter-top trim. A shelf is not required to support it from the bottom.

When using the insulated jacket in a combustible enclosure, the jacket must be supported from the bottom by a ledge on each side or a full deck beneath the jacket.

Pay special attention to the instructions shown for gas line hook-up.

The enclosure should have ventilation holes to prevent LP gas build-up in the event of a leak. The deck ledges and counter should be flat and level. (refer to ANSI Z21.58 Standard for Outdoor Cooking Gas Appliances, Section 1.7 Enclosures For Self Contained LP-Gas Supply Systems)

If an electrical connection is desired in your island, have a 120 volt 60 hertz, 15 amp GFI certified outlet installed by a qualified electrician.

If you plan to use a rotisserie kit with your grill then a minimum of 8" of clearance is needed on both sides of the grill above the counter top. For 3 Burner models an additional 6" (14" total) is required on on e side of the grill for clearance.

Installing the Appliance in a BBQ Island

Overhead Protection & Exhaust Removal

Do not install this appliance under any unprotected overhead combustible construction. If installed under any combustible construction the cooking area over the grill must be covered with an exhaust hood.

The hood must provide 3 to 6 inches of overhang on all exposed sides. The exhaust hood shall provide no less than 1200 CFM for proper exhaust ventilation. The hood must be approved for outdoor installation and provided with a dedicated GFCI protected branch circuit.

REAR HOOD CLEARANCE

A minimum of 5.75" clearance is required from the back of the grill (7.5" from the back of the grill cut out) to allow the lid to open.

The grill exhausts combustion by products and cooking greases to the back. Never locate the grill where this exhaust residue will be difficult to clean.

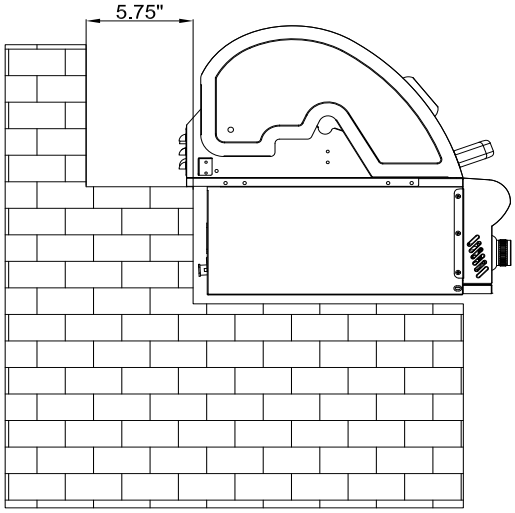

Cutout Dimensions for Built-in Grills

Model #		Cutout Dimension (inch		
		D	E	F
43100	43101	23.500	22.125	10.125
43102	43103	29.500	22.125	10.125
43104	43105	35.500	22.125	10.125

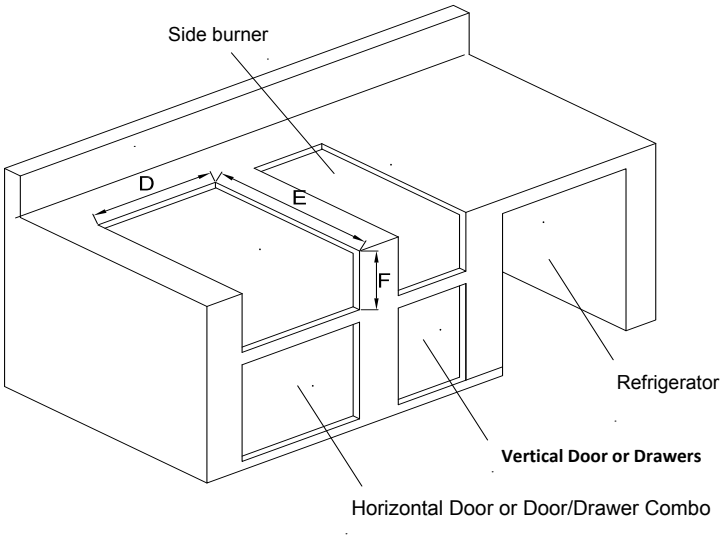

Required additional grill & side burner details

IMPORTANT

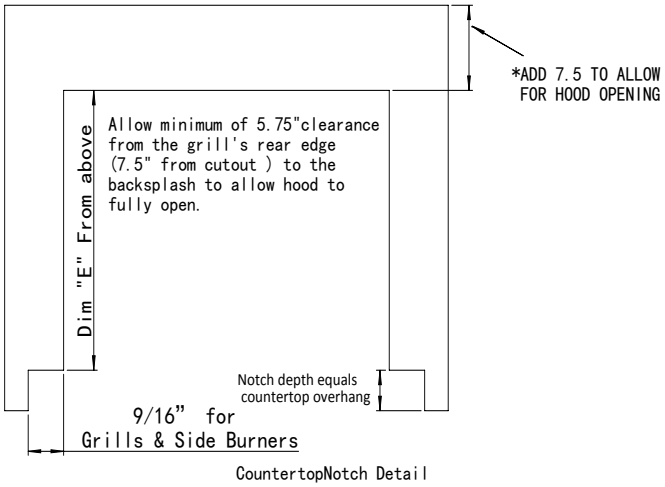

Always have all Grill and Accessories on hand when constructing and island to make sure of proper fit.

IMPORTANT

Gas Connections

WARNING

NEVER CONNECT AN UNREGULATED GAS LINE DIRECTLY TO THE GRILL. THIS IS REQUIRED BY ALL LOCAL CODES AND THE CORRECT REGULATOR IS SUPPLIED WITH YOUR GRILL, REMOVING THE REGULATOR CAN RESULT IN FIRE OR SERIOUS PERSONAL INJURY AND WILL VOID YOUR WARRANTY.

UNPACKING UNIT:

This grill comes pre-assembled and requires very little setup. We do however; recommend the use of professional help during the installation of your appliance as improper installation may affect your warranty.

The grill is factory set to use either liquid propane (LP) or natural gas (NAT). It is critical that the gas you use matches that which the grill is set up for. ***Verify this by checking the rating label which is located underneath the control panel.***

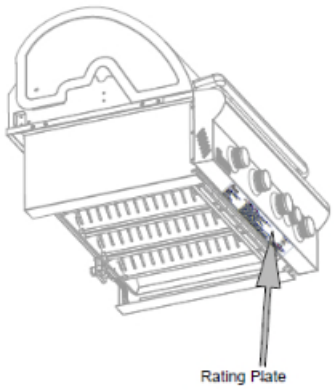

The Rating plate lists serial number, model number and gas type of your appliance.

Ensure that the gas supplied meets with the minimum pressure requirements. Do not operate the grill on any gas other than that for which the grill has been set.

Fuel	WC Max Inlet	WC Min Under Full Load
Nat Gas	7 in	4 in
LP	14 in	11 in

Water Column Requirements

Both the regulator and the manifold orifices are set for the type of gas specified on the rating plate.

Converting to a different type of gas requires using the conversion kit supplied with this appliance. Gas conversions must be performed by a qualified technician.

All installations and all installation parts must conform to local codes with the National Electrical Code, ANSI Z223.1/NFPA 70 latest edition and the National Fuel Gas Code, ANSI Z223.1/NFPA 54 in the U.S. and CGA-B149.1/.2 in Canada.

Canadian installations must conform to CGA-B149.1/.2 natural gas/propane installation code. (Canada)

NATURAL GAS

LANDMANN recommends that only qualified professionals perform the required plumbing on this product.

To ensure satisfactory performance, the gas supply line must be sized to accommodate the total BTU requirements of all the gas-fired equipment that will be connected to that line.

In no case should pipe less than 3/4” inside diameter or 1” outside diameter ever be used to connect this product.

- Calculate the total BTU output of all equipment. Failure to meet these minimum requirements may reduce performance of the grill and any other appliances running on that supply line.

Gas Connections

- Always keep supply line runs as short as possible.
- A gas shut-off valve must be installed in an easily accessible location by a qualified plumber.
- Keep threading compound off of the first two pipe threads to avoid having any small pieces of compound break loose and clog a burner valve or orifice. Do not use threading compound on any flare fittings.

Keep last two threads clean

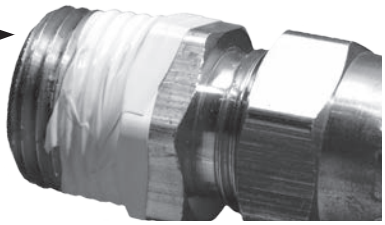

For built-in installations, it is recommended that any flexible pipe used be kept as short as possible.

For *freestanding* units using natural gas, LANDMANN strongly recommends using a flexible NG gas hose w/ quick connect kit that is available from your local dealer.

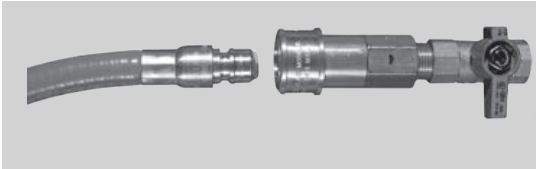

LP Gas Connection

Install the factory-supplied hose and regulator assembly as shown. Connect the 3/8” flare end of the hose to the grill coupling using a 3/4” open wrench. Do not apply pipe sealant to the 3/8” flare connection. Connect the regulator to the LP cylinder hand tighten it, do not use a wrench. Check for leaks using soapy water solution. (See leak test procedure).

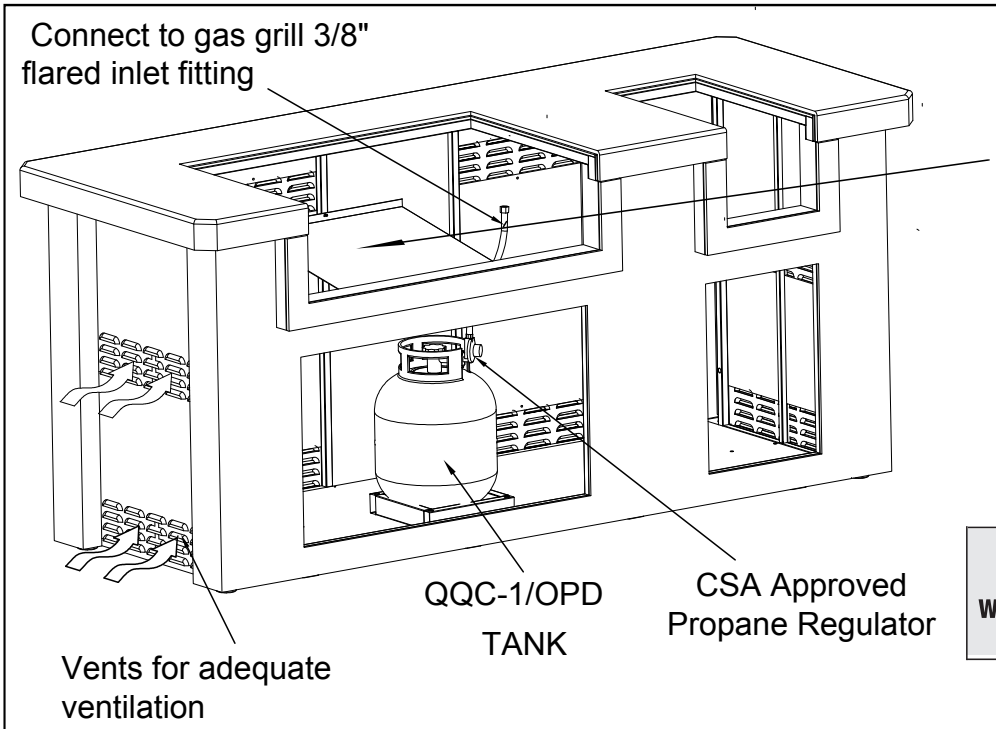

If using a 20 Lb LP tank, an adequate heat shield must be installed in between the grill and LP tank

WARNING	**Do not** store any **spare** LP TankS within the enclosure

Gas Connections

Note: *An enclosure for LP gas cylinder must be vented on the level of the cylinder valve and at floor level. The effectiveness of the opening(s) for purposes of ventilation shall be determined with the LP gas supply cylinder in place. This shall be accomplished by one of the following:*

a. *One side of the enclosure shall be fully open; or*

b. *For an enclosure having four sides, a top and a bottom:*
At least two ventilation openings at cylinder valve level shall be provided in the sidewall, equally sized, spaced at 180 degrees (3.14 rad), and unobstructed. Each opening shall have a total free area of not less than 1/2 square inch per pound (7.1 cm2/kg)of stored fuel capacity and not less than a total free area of 10 square inches (64.5 cm2).

Ventilation opening(s) shall be provided at floor level and shall have a total free area of not less than ½" square inch per pound (7.1 cm2/kg) of stored fuel capacity and not less than a total free area of 10 square inches (64.5 cm2). If ventilation openings at floor level are in a sidewall, there shall be at least two openings. The bottom of the openings shall be at floor level and the upper edge no more than 5 inches (127 mm) above the floor. The openings shall be equally sized, spaced at 180 degrees (3.14 rad) and unobstructed.

Natural Gas Connection

The installation must conform with local codes or, in the absence of local codes, with either the national Fuel Gas Code, ANSI Z223.1/NFPA 54, or CAN/CGA-B149.1, Natural Gas Installation Code or CAN/CGA-B149.2, Propane Installation Code.

1. This gas appliance and its individual shutoff valve must be disconnected from the gas supply piping system during any pressure testing of that system at the test pressures in excess of 1/2 psi (3.5 kPa).

2. This appliance must be isolated from the gas supply piping system by closing its individual manual shutoff valve during any pressure testing of the gas supply piping system at test pressures equal to or less than 1/2 psi (3.5 kPa).

A typical Natural Gas installation is shown below. Make sure that the factory-supplied regulator is used and installed with the arrow mark on the regulator pointing towards the gas grill. Do not use any replacement regulator other than that specified by Landmann. Use only pipe sealants that are approved for use with Natural and LP gases. An installer-supplied gas shutoff valve must be installed in an accessible location.

Gas Connections

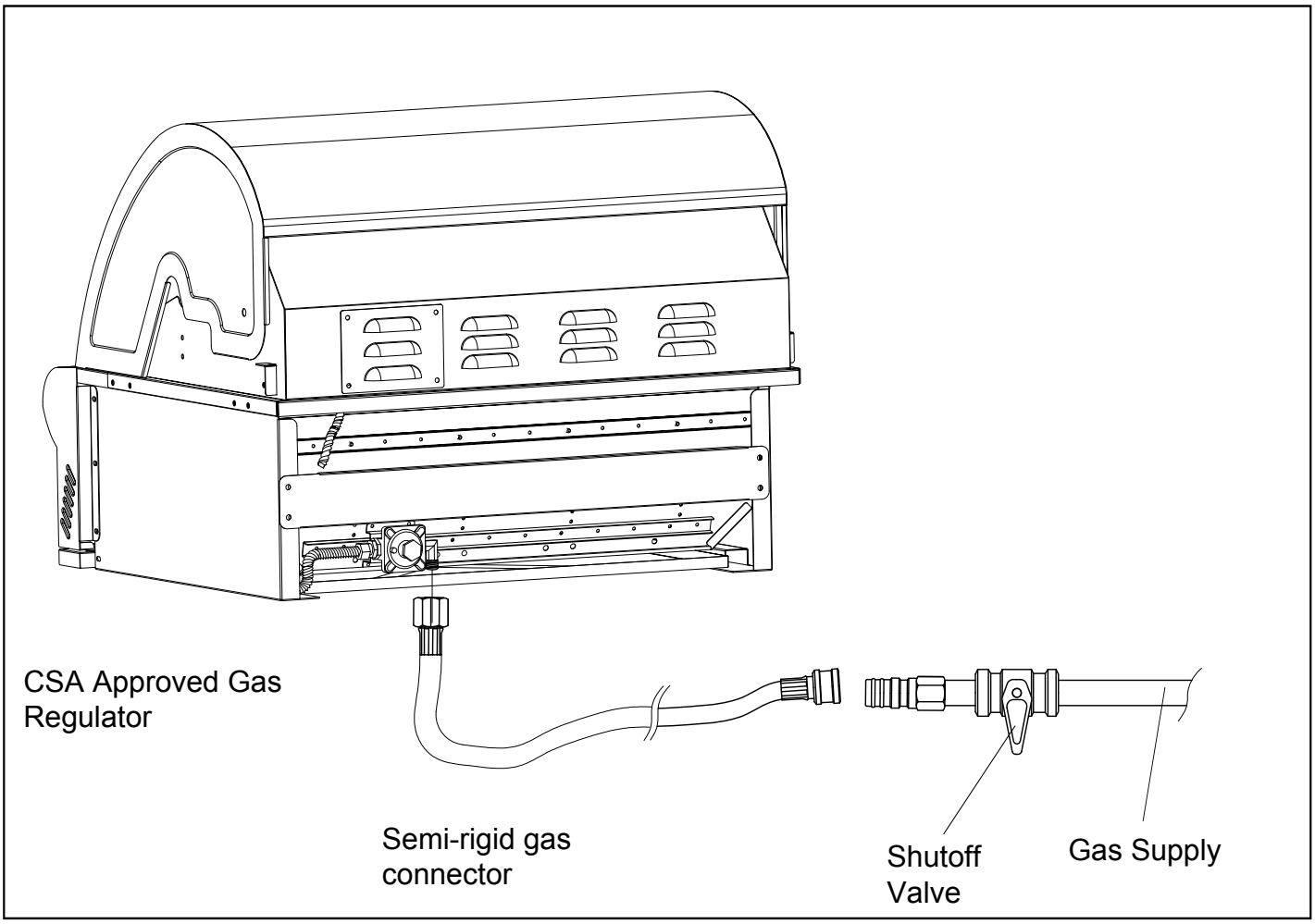

Checking for Gas Leaks

LEAK TEST

1. Prepare a leak testing solution of soapy water by mixing in a spray bottle with one part liquid soap to three parts water
2. Confirm that all control knobs are in the OFF position.
3. Turn the main gas valve supply ON.
4. Apply leak testing solution by spraying on the pipe joints, fittings, and hose.
5. A gas leak is detected if;
   a) there is a faint gas smell and/or…
   b) …growing bubbles appear on any of the connection points and/or hose, DO NOT attempt to ignite the grill and IMMEDIATELY turn off the gas supply valve.
6. When there is a gas leak, call a qualified service technician. **DO NOT use the grill until the leak is corrected.**

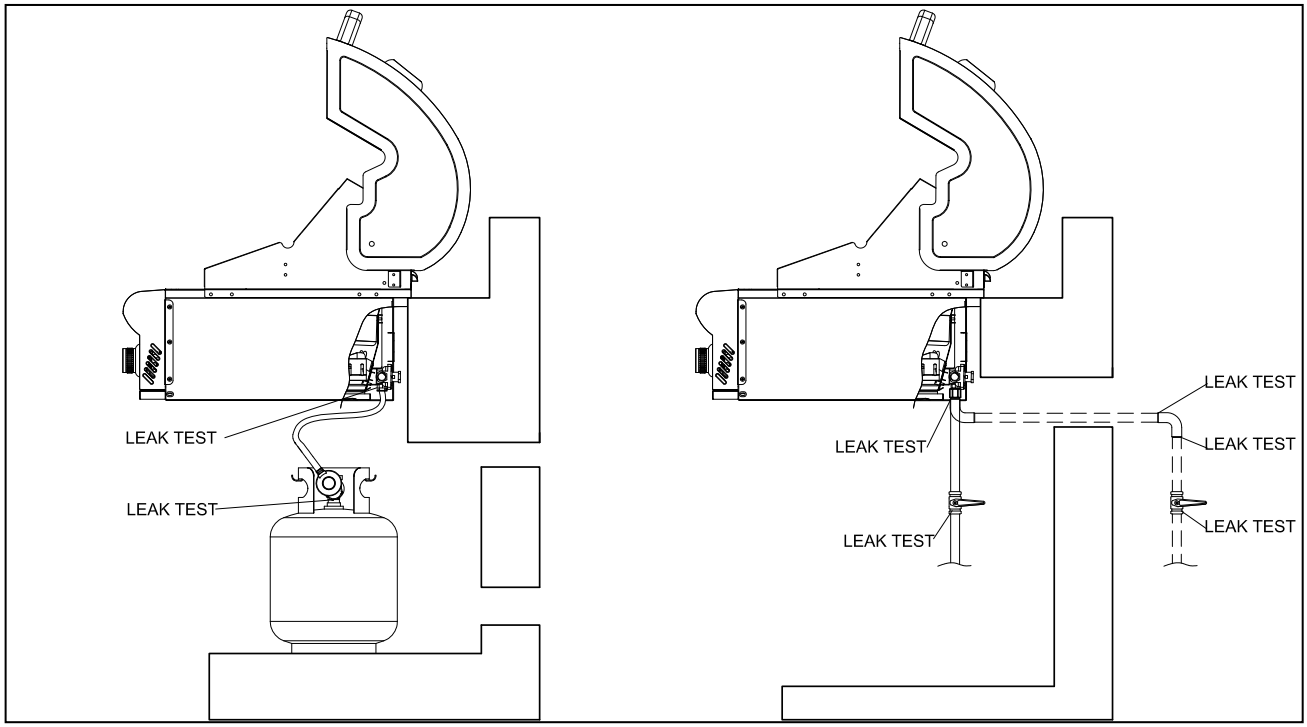

BOTTLE LP GAS HOOK UP

TYPICAL NATURAL GAS HOOK UP/PLUMB-IN LP GAS HOOK UP

Main burner Lighting Instructions

Prior to the first use, it is important to clean your grill with heat. This will clean the internal parts by burning off any residue and odor from the manufacturing process. To perform this cleaning, operate the grill for approximately 15-20 minutes at the highest heat setting with the lid closed.

IMPORTANT
Please read these instructions before attempting to light the grill.

WARNING	Failure to open the lid before igniting may result in an explosive flare-up, which can cause serious bodily injury or death.

WARNING	**DO NOT** lean over the open grill when lighting.

1. Turn all gas control knobs to the **OFF** position.
2. Turn on gas valve from gas source.
3. Lid **MUST** be open when lighting.
4. Push in and slowly turn the desired control knob to **HI**. If the burner does not light turn the knob **OFF** and then repeat.
5. If the burner will not light within 3 attempts, use the match lighting instructions shown on this page.
6. Always wait 5 minutes before attempting to relight burners.

WARNING	Failure to follow the five-minute waiting period may result in an explosive flare-up, which can cause serious bodily injury or death.

7. To extinguish the burner, push in the control knob and turn clockwise to the **OFF** position.

Match Lighting

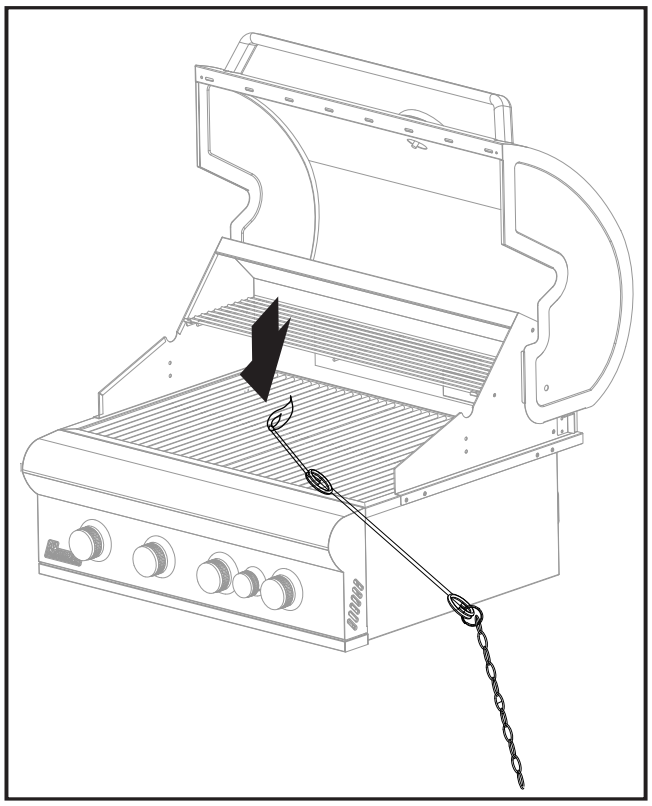

Note: Match lighting tool is typically located inside an access door.

1. Turn all gas control knobs to the **OFF** position.
2. Turn on gas valve from gas source.
3. Lid **MUST** be open when lighting.
4. Remove the match lighting tool and stick a match into the end of the tool.
5. Light the match.
6. Once lit, guide the lit match under the grate.
7. Push in and turn the control knob to **HI** for the burner closest to the light match. The burner should light immediately.
8. Adjust burner control knob to the desired cooking temperature.

Care and Maintenance

Please use the following guidelines to keep your grill clean and looking new. Before any cleaning, make sure all the burners are in the **OFF** position and grill is cool to the touch.

Cleaning the Outside of the Grill
For the stainless steel surfaces, use a good quality stainless steel cleaner.

- When cleaning, always rub or wipe in the direction of the stainless steel grain.
- For stubborn spots, always scrub in the direction of the stainless steel grain.
- **DO NOT** clean stainless steel with anything containing acid, mineral spirits or xylene.
- **DO NOT** use a wire brush or any abrasive cleaner on the stainless steel surface as this will cause scratches in the stainless steel finish.

Cleaning the Inside of the Grill
For safety and efficiency, it is important to remove any debris or excess grease that may accumulate inside the grill.

WARNING	If using a bristle brush to clean cooking surfaces make sure no loose bristles remain on the cooking surface as they may attach to food.

CAUTION	Do not allow drippings or food residue to remain on the heat tents or grease tray. Clean regularly to ensure proper cooking performance.

- Wipe off the inner lid liner with a paper towel to prevent grease build up.
- For the stainless steel heat tents, clean residue off with wire brush or a flat scraper.
- Remove the grease tray from the grill and clean off residue with a wire brush or flat scraper, then wipe with a paper towel to remove any excess grease.

CAUTION	**DO NOT** line the grease tray with aluminum foil.

Gas Hose Inspection
The gas hose should be inspected periodically for any signs of cracking, nicks, cuts or abrasions.

- If the gas hose is found to be damaged in any way, **DO NOT** use the grill.
- The gas hose must be replaced by a certified hose as shown in the replacement part section.

Checking the Flame
The flame coming out of the burners should be a blue/yellow combination and between one to two and a half inches tall (see below).

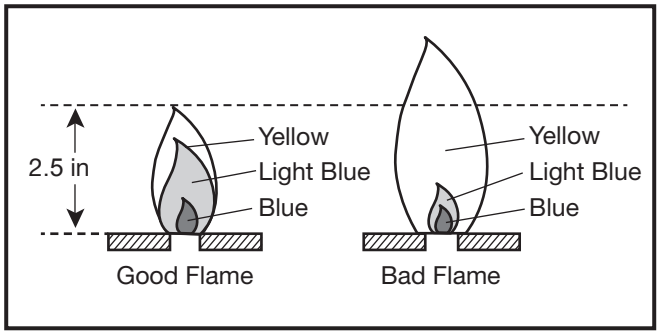

To Remove Burner
Make sure all control knobs are in the **OFF** position, the LP gas supply valve has been closed, and the gas hose is disconnected from the gas supply.

1. Open Lid and remove warming rack, cooking grates and flame tamer.
2. Using pliers remove the R clip and main burner pin holding the burner in the back of the grill.
3. Slide the burner forward and then lift up and out of the firebox.

To Clean Burner

- Make sure all burner ports are clear of any clogs. **Tip:** Use a pin or paper clip to unclog.
- Make sure the burner is free of any damage. If damage is found, replace the burner.
- Make sure the end of the burner and primary air holes are clear from insect nests, dirt, or debris.

To Reinstall Burner

1. Be sure the gas valve orifices are correctly positioned inside the burner inlet.
2. Reattach R clip and main burner pin
3. Reposition flame tamer, cooking grate, and warming rack.

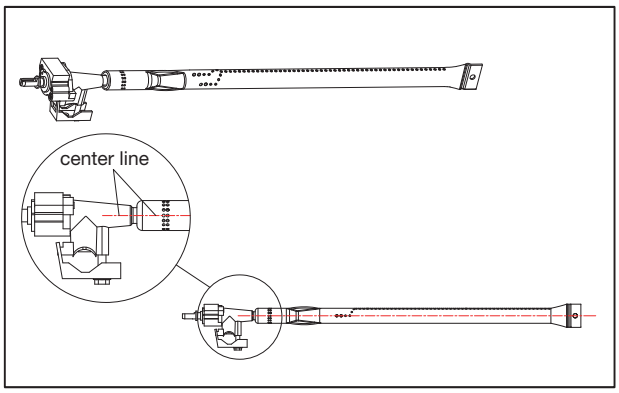

Cooking Methods And Grilling Tips

Direct Heat

Direct heat cooking means that the food is placed on grill grates directly over the lighted burners.

- The lid position can be either up or down.
- If the lid is in the up position, generally cooking time may be longer.
- Direct heat is used to sear the food to seal in the natural juices by cooking with intense heat for a short period of time. The outside of the food is browned with a flavorful grilled coating.

Indirect Heat

Indirect heat cooking means the food is placed on the grill grate above an unheated burner, allowing the heat from the lighted burner(s) on either side to cook the food.

- For best results, turn on two burners and cook with the lid down. This will shorten the cooking time.
- **DO NOT** select indirect heat cooking when it is windy outside.

Before Grilling

- Make sure that the food items are completely thawed before grilling.
- With the lid closed, preheat the grill on high (using all burners) for approximately 5-10 minutes.
- **DO NOT** lift the lid during the preheating process.
- The preheating process with high heat is necessary to brown and seal juices of the food.
- For high-fat meat and poultry, trim excess fat from meats and shorten the preheat time. Both will help reduce flare-ups from dripping grease.
- Lightly oil the cooking grates when cooking low-fat meat, fish or poultry. Beware that using too much oil can cause a gray ash to deposit on the food.

During Grilling

- The temperature gauge on the lid indicates the approximate cooking temperature inside the grill.
- Turn foods only once if possible. Juices are lost when meat is turned several times.
- Turn meat just when the juices begin to appear on the surface.
- Avoid puncturing or cutting the meat to test doneness. This allows the juices to escape.
- Add barbecue sauce only during the last 10 minutes of cooking to avoid burning the sauce.
- The doneness of the meat will be controlled by the type of meat, the size, shape and thickness of the meat, the heat setting or method, and the length of time on the grill.
- Cooking time will be longer with an open grill lid.
- Allow for more cooking time on cold and windy days, or at higher altitudes. In reverse, allow for less cooking time in extremely hot weather.
- Grilling conditions may require adjustments of the burners to obtain and maintain the correct cooking temperatures.
- Crowding food on the cooking grate will require more time to cook the food.
- Use tongs for turning and handling meat instead of a fork, to avoid losing the meat juices.
- If a flare up occurs, turn all the burners to the **OFF** position and move the food to another area of the cooking grate. After flames subside, relight the burners using the lighting instruction in this manual.
- **NEVER** use water to extinguish flame on a gas grill.

Using the Rotisserie Burner (4 & 5 Burner Models Only)

The rear infrared rotisserie burner allows for slow rotisserie cooking of meats & poultry. The infrared rotisserie burner radiates heat onto the outer surface of the food and allows cooking without grease dripping on the hot burners. Rotisserie cooking generally requires 1 ½ to 4 ½ hours to cook depending on the size and type of meat being cooked.

The rotisserie burner is designed only to be used for rotisserie cooking with the compatible rotisserie kit accessory which is sold separately and available from your local dealer.

WARNING	Warming rack must be removed when operating the rotisserie burner.

Remove cooking grates and heat tents to provide adequate space for food to turn. Always place a large basting pan underneath the rotisserie food to catch grease and drippings and to prevent them from clogging up the main burners. The basting pan can be set directly on top of the main burners.

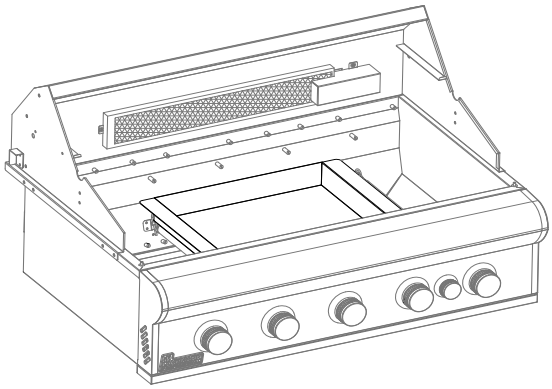

Basting pan

Lighting the Rotisserie Burner

Prior to the first use, it is important to clean your grill with heat. This will clean the internal parts by burning off any residue and odor from the manufacturing process. To perform this cleaning, operate the grill for approximately 15-20 minutes at the highest heat setting with the lid closed.

IMPORTANT
Please read these instructions before attempting to light the grill.

WARNING	Failure to open the lid before igniting may result in an explosive flare-up, which can cause serious bodily injury or death.

WARNING	**DO NOT** lean over the open grill when lighting.

1. Turn all gas control knobs to the **OFF** position.
2. Turn on gas valve from gas source.
3. Lid **MUST** be open when lighting.
4. Remove warming rack.
5. To ignite a burner, push and turn any control knob to the **HIGH** position.
6. Press and hold the electronic igniter button to light the selected burner.
7. If the burner does **NOT** ignite in five seconds, turn the burner control knob to the **OFF** position, wait at least five minutes for the gas to clear and repeat this lighting procedure.

WARNING	Failure to follow the five-minute waiting period may result in an explosive flare-up, which can cause serious bodily injury or death.

8. To extinguish the burner, push in the control knob and turn clockwise to the **OFF** position.

Note: Because there is some distance between the gas valve and the rotisserie burner lighting the rotisserie burner may take several attempts to ignite.

Using the Rotisserie Burner (4 & 5 Burner Models Only)

Match Lighting

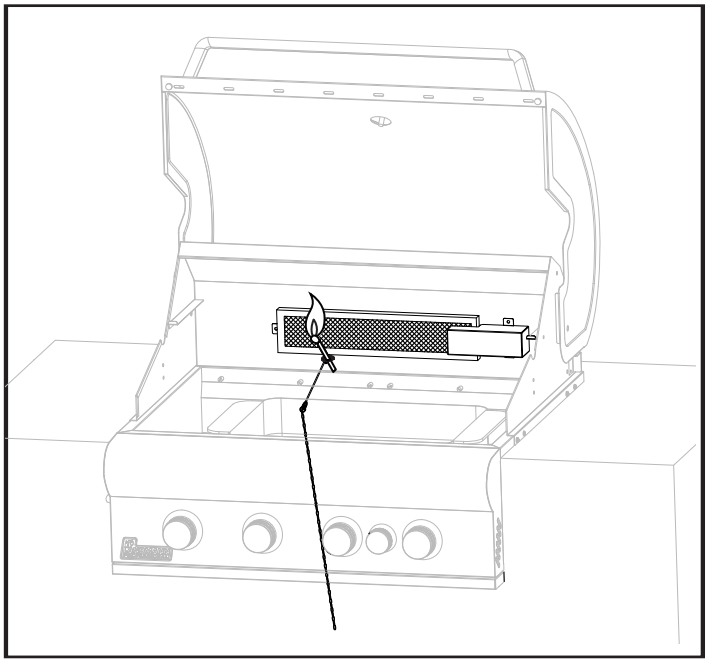

Note: Match lighting tool is located on the inside of the door.

1. Turn all gas control knobs to the **OFF** position.
2. Turn on gas valve from gas source.
3. Lid **MUST** be open when lighting.
4. Remove warming rack..
5. Remove the match lighting tool and stick a match into the end of the tool.
6. Light the match.
7. Once lit, guide the lit match under the grate.
8. Push in and turn the control knob to **HI** for the burner closest to the light match. The burner should light immediately.
9. Adjust burner control knob to the desired cooking temperature.

Maintenance & Cleaning

Maintenance

Landmann products are known for their

attractive appearance.

In order to maintain this attractive appearance over the life of the grill it is important to take the following steps:

- After each use wipe down the exterior of the grill to remove grease and splatters.
- Be sure to follow the cleaning instructions for keeping the grates and burners clean and ready for use.
- Use a commercially available Stainless Steel cleaner to clean and polish the exterior surfaces.

Doing these things on a regular basis minimizes the amount of effort required.

When removing stubborn stains:

- Do not use metallic abrasives and always rub in the direction of the grain.

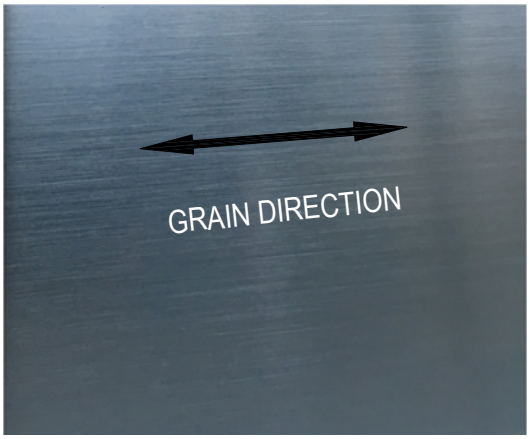

- Some household cleaning products are not suitable for stainless steel; be sure to read the label before using on your Grill.
- Always use the mildest cleaning solution first, scrubbing in the direction of the grain. Specks of grease may gather in the grain of the stainless steel and bake on to the surface, giving the appearance of rust.

To remove these baked-on foods use a fine to medium grit non-metallic abrasive pad (Scotch Brite is good) in conjunction with a stainless steel cleaner.

SPECIAL NOTE FOR LOCATIONS NEAR POOLS AND COASTAL AREAS:

The 304 stainless steel material used in the construction of a Landmann Grill is highly rust resistant, however, chlorine in the air from swimming pools or the salt from sea air may cause surface rust to appear and even create some pitting if left on the product.

Here are a few tips to avoid this:

- Regularly wipe down the exterior surfaces with a damp cloth. (Micro fiber cloths perform very well).
- Allow the surfaces to dry before installing the cover. Do not cover a damp grill.
- In extreme environments apply a rust inhibitor which leaves a microscopic protective layer on the grill.
- For seasonal storage use the product referred to above, ensure the grill is dry and then cover and secure the cover to minimize the amount of damp air getting to the surfaces.

Maintenance & Cleaning

THE LANDMANN LIMITED LIFETIME WARRANTY PROVIDES PROTECTION AGAINST RUST THROUGH OF PARTS THAT RENDER THE PRODUCT INOPERATIVE. IT DOES NOT COVER OCCASIONAL SURFACE RUST OR STAINING DUE TO ENVIRONMENTAL CONDITIONS.

After your first use certain areas of the grill may discolor from the intense heat given off by the burners - this is normal and cannot be cleaned off.

For light and heavy food stains there are many different stainless steel cleaners available.

Cleaning

Never clean the stainless steel when it is hot. After the initial grilling use, certain areas of the grill may discolor. This is a normal discoloration caused by the intense heat given off by the burners. Specks of grease can gather on the surface of the stainless steel and get baked-on. These can be removed by using a mild abrasive pad (like Scotch Brite) with a stainless steel cleaner. Use the mildest cleaner and always scrub in the direction of the grain. Never use steel wool to clean the grill. Do not use abrasives on the polished highlights. Be extra careful when cleaning around the highlights. Metal polish or mild chrome cleaner can be used to bring back the luster on highlights.

DRIP TRAY

The drip tray collects grease, liquid and fallen food particles. Allow the tray and its contents to cool before cleaning.

Slide the tray out and wipe it clean. Make sure the drip tray is fully inserted back into the grill. It is highly recommended to clean the tray after every use to avoid any possibility of a grease fire. **DO NOT** use the grill without the grease tray pushed all the way to the back of the grill unit.

Use a flat scraper to remove large amounts of grease & debris and then clean with hot soapy water. After cleaning, dry completely and re-install

Also, check the tray after rain. If you've left the grill uncovered, you may need to remove the drip tray to drain the water from the tray.

COOKING GRATES

The easiest way to clean the stainless steel grates is to scrub them with a barbeque brush immediately after cooking is completed and the flame is turned off.

Wear a barbeque mitt to protect your hands from the heat. Use a good quality grill brush and scrub in the direction of the cooking grate bars. CAUTION: Always be sure to check for any loose brush bristles that may have fallen out and could get stuck on the cooking grates. When cleaning the grates make sure not to hit the ceramic infrared rotisserie burner.

FLAMER TAMERS, WARMING RACKS

To clean after each use, turn the appliance on HIGH for 10-15 minutes with the lid closed. This allows any food particles or grease drippings to burn away. Brush components to remove any remaining charred materials.

Troubleshooting

Problem	Cause	Solution
Grill will not light.	1. Main gas valve is closed. 2. LP cylinder gas level is low. 3. "Match lighting" may be necessary. 4. Connections to the igniter are loose. 5. Electrodes may be wet. 6. Debris is blocking the electrodes. 7. No spark shows at igniter tip. 8. There are obstructions such as grease, debris or insects in the Instant Flame ignition tube	1. Turn **ON** Main gas valve. 2. Replace or refill LP cylinder. 3. "Match lighting" light grill per this manual's instructions. 4. Reconnect or replace wiring to igniter. 5. Dry electrodes with dry cloth. 6. Clean electrodes with rubbing alcohol and retry. 7. Replace igniter. 8. Clean ignition tube
Flame will not stay lit.	1. Main gas valve is closed. 2. LP cylinder gas level is low. 3. Burner is not properly installed or dirty.	1. Turn **ON** Main gas valve. 2. Replace or refill LP cylinder. 3. Reinstall burner properly and clean out any debris.
Flame is low, irregular or noisy.	1. LP cylinder gas level is low. 2. Improper lighting procedure. If using 20 LB. LP gas hose & regulator 3. Burner ports may be clogged. 4. Gas supply may be bent or kinked. 5. Grill may be in an area that is too windy. 6. There are obstructions such as grease debris, or insects in air inlets.	1. Replace or refill LP cylinder. 2. Disconnect LP hose regulator from LP tank, reconnect and then follow lighting procedure exactly as listed. 3. If only one burner is affected, check and clean the burner ports. 4. Straighten out the gas supply hose. 5. Wait until wind subsides to continue. 6. Clean burner air inlets of obstructions.
Excessive flare-ups **CAUTION** **DO NOT** spray water on the gas flames – this could damage the grill.	1. Flare-up are normally caused by excessive fat from meat being grilled. 2. Grill is dirty. 3. The cooking temperature may be too high. 4. Lid is closed. 5. Food is overcooked or burnt. 6. Drip tray is full of grease.	1. Trim fat from meat being grilled. 2. Make sure grill is clean. 3. Keep flame on low or turn one burner off. 4. Keep the lid up when grilling to avoid excessive flare-ups. 5. Move food to the warming rack until flames subside. 6. Clean drip tray.
Grill does not get hot enough.	1. LP Cylinder gas level is low. 2. If using 20 LB. LP gas hose & regulator, gas flow limiting device may have been activated.	1. Replace or refill LP Cylinder. 2. Turn OFF Control Knobs & LP Cylinder valve. Disconnect regulator from LP Cylinder. Inspect & clean LP Cylinder fitting and regulator connector. Wait 1 minute. Reconnect regulator and perform leak test. Light grill following exact lighting procedure.

Grilling Guidelines

Type	Description	Cooking Method	Burner setting	Thickness	Total time	Instructions
BEEF						
Steaks	NY Strip, Rib eye, Porterhouse, T-Bone, Sirloin, Filets	Direct	High	1 in / 2.5 cm	10-15 min	Turn meat only once, halfway through the grilling time
	NY Strip, Rib eye, Porterhouse, T-Bone, Sirloin, Filets	Direct	High	2 in / 5 cm	18-22 min	Turn meat only once, halfway through the grilling time
	Flank (per lb / kg)	Direct	Medium	.75 in / 1.9 cm	11-20 min	Depends on the weight of the meat for the timing
Hamburgers	Ground beef patty	Direct	Medium	.75 in / 1.9 cm	10-15 min	Turn meat only once, halfway through the grilling time
Roasts	Rib eye, Sirloin	Indirect	Medium		30-40 min	This time is rated on weight of the meat (i.e. 30-40 minutes per lb / kg)
PORK						
Chops		Direct	High	.75 in / 1.9 cm	10-15 min	
		Direct	High	1.5 in / 3.8 cm	25-35 min	
Ribs	2-5 lb / .9-2.2 kg racks	Indirect	Medium		50-70 min	Turn occasionally. Sauce in last 10 minutes
Roast	Tenderloin (per lb / kg)	Direct	Medium		15-20 min	Turn to brown all sides
CHICKEN						
Breast	Boneless, skinless	Direct	Medium	6-8 oz / 170.1-226.8 g	10-15 min	
Thighs	Boneless, skinless	Direct	Medium	4-6 oz / 113.4-170.1 g	8-13 min	
Whole		Indirect	Medium	4-6 lbs / 1.81-2.71 kg	60-80 min	
TURKEY						
Whole	Unstuffed	Indirect	Medium	10-12 lbs / 4.5-5.4 kg	2-2.5 hours	
Breast	Bone-in	Indirect	High		14-18 min	
FISH						
Fillets or steak	Swordfish, Tuna, Salmon, Halibut, etc.	Direct	Medium		4-6 min	Per .5 in / 1.3 cm thickness. Grill, turning once.
Whole	Catfish, Trout, etc. (12 oz / 340 g)	Indirect	Medium		10-12 min	Per side

Grilling Guidelines

Type	Description	Cooking Method	Burner setting	Thickness	Total time	Instructions
Shrimp	18-20 oz / 510-566 g	Direct	High		3-6 min	
VEGETABLES						
Corn on the Cob	In Husk	Direct	Medium		20-30 min	
	Husked	Direct	Medium		12-15 min	
Potatoes	Baking, whole	Direct	High		45-90 min	Individually wrapped in aluminum foil. Rotating occasionally
	Sweet, whole	Direct	Medium		40-70 min	Individually wrapped in aluminum foil. Rotating occasionally
Peppers	Roasted	Direct	High		15-20 min	
Onion	Sliced	Direct	Medium		8-12 min	Grill, turning once.
Squash	Summer, Zucchini	Direct	Medium		7-10 min	
Asparagus	.5 in / 1.2 cm diameter	Direct	Medium		6-8 min	

Gas Conversion

Installation Safety Precautions

WARNING	This appliance is set to operate at 1/2psi water column supply pressure. Verify supply pressure with your local gas company. If supply pressure is different than this, contact a certified plumber for assistance.

Grill installation must conform with local codes, or in their absence with **National Fuel Gas Code, NFPA 54/ ANSI Z223.1**. Grill is not for use in or on recreational vehicles and/ or boats.

All electrical accessories (such as rotisserie) must be electrically grounded in accordance with local codes, or **National Electrical Code, ANSI/NFPA 70.** Keep any electrical cords and / or fuel supply hoses away from any hot surfaces.

This grill is safety certified for use in the United States only. Do not modify for use in any other location. Modification will result in a safety hazard.

Natural Gas Connections and Service Regulators Above 1/2 psi.

Prior to 1998, all residual gas service regulators were set with an outlet pressure of 7 inches water column.

In the 1998 edition of NFPA54, the National Fuel Gas Code, a change was made allowing serive regulators of 2 and 5 psi.

With this change it was also required that an in line regulator be connected between the service regulator and the appliance regulator if the 2 or 5 psi system is used. This additional regulator is not supplied with the product.

It is possible for a consumer, making the connection themselves, or a plumber, not checking, to tap into a 2 or 5 psi line. If a pressure of 2 psi or greater is supplied to the appliance regulator on certain grills it will shut down and not deliver any gas to the grill. Other concerns are the quick disconnect socket and hose which are only rated to 1/2 psi.

If the quick disconnect socket, hose, and grill are properly connected and still not getting gas, delivery pressure needs to be verified. If pressure is greater than 1/2 psi, make sure that an in line regulator is present.

Once the grill has been over-pressured, the regulator may or may not have been damaged. Thhe best practice is to replace the regulator.

WARNING	Incorrect connection can result in a gas leak with possibility of fire.

WARNING	**For residential use only. Do not use for commercial applications**

Gas Conversion

PARTS LIST/DIAGRAM

Orifices - See chart on next page for your model number and specific orifices supplied.

1 Orifice Removal Tool

Conversion label

Tools required for assembly:
7mm wrench
Adjustable wrench
Pliers
Phillips screw driver

1

- First, make sure all control knobs are in the OFF position, main gas supply is off and grill is disconnected from gas source.
- Next, open Lid and remove Warming Rack, Cooking Grates, and Flame Tamers.

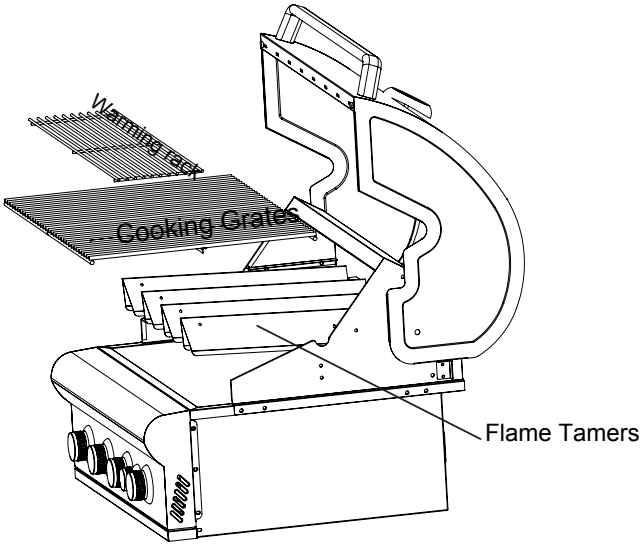

2

- Using pliers remove R pins from above flame crossers
- Remove Flame crossers

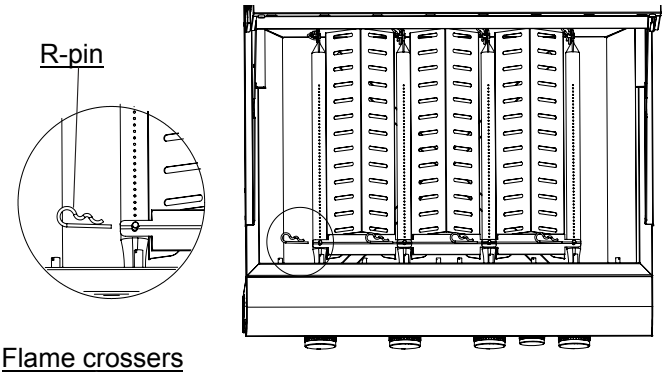

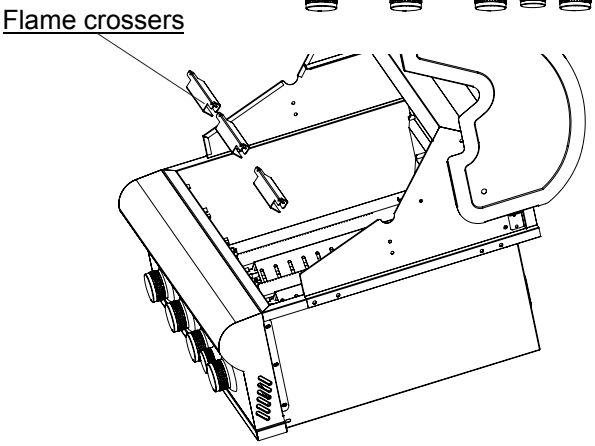

3

- Using pliers remove R pins and main burner pins from burners.

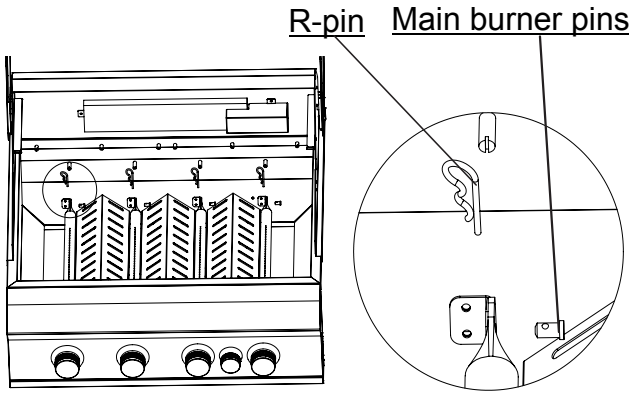

Gas Conversion

4 - Insert Orifice Removal Tool into Firebox Burner opening and unnscrew Orifies from ends of Valves. Save removed Orifices for later if converting back to original gas type.
- Install new orifices.
-Be sure to use orifice size chart below to install the proper orifice on each burner for your specific model .

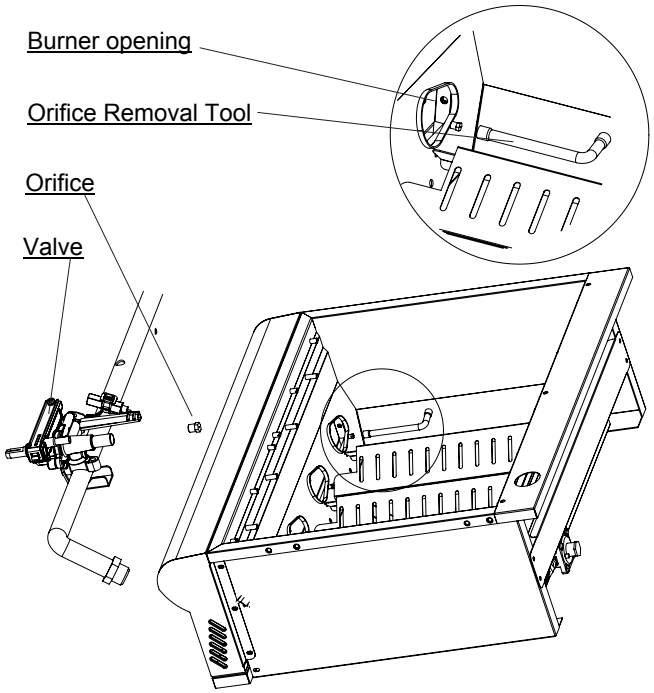

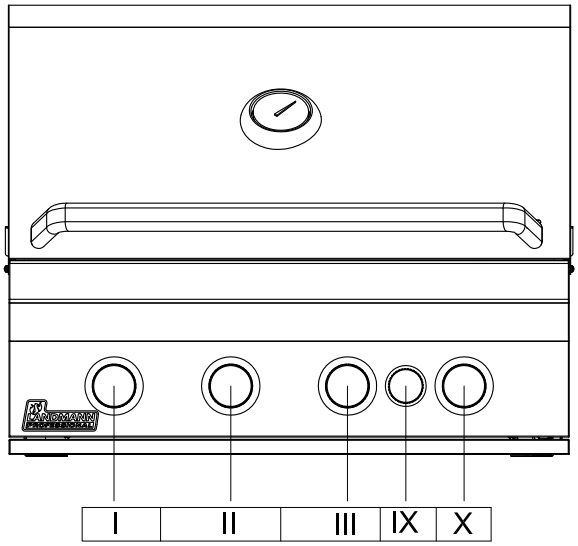

Model #	Burner #	I	II	III	IX	X
43102	Orifice Size (LP) (mm)	∅1.04	∅0.99	∅0.99	∅1.1	∅1.04
43103	Orifice Size (NG) (mm)	∅1.65	∅1.61	∅1.61	∅1.75	∅1.65

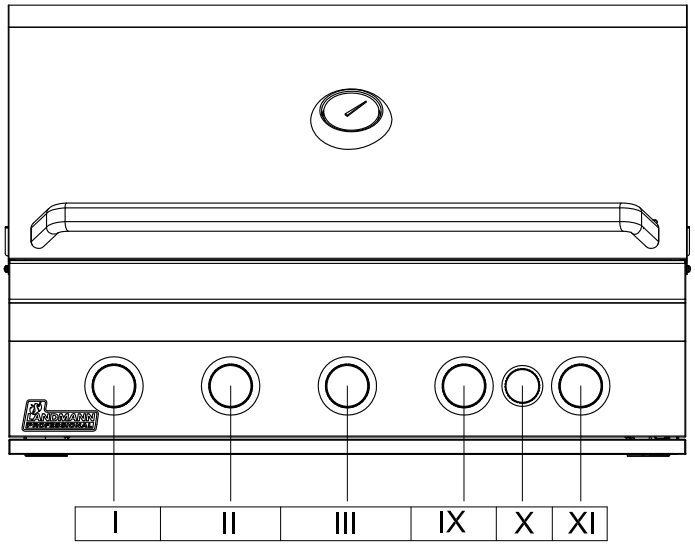

Model #	Burner #	I	II	III	IX	X	XI
43104	Orifice Size (LP) (mm)	∅0.99	∅0.95	∅0.95	∅0.95	∅1.38	∅0.99
43105	Orifice Size (NG) (mm)	∅1.61	∅1.5	∅1.5	∅1.5	∅2.32	∅1.61

Orifice sizes are shown as below:

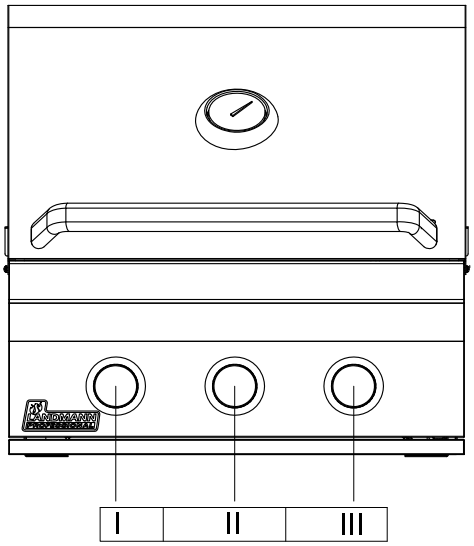

Model #	Burner #	I	II	III
43100	Orifice Size (LP) (mm)	∅1.04	∅0.99	∅1.04
43101	Orifice Size (NG) (mm)	∅1.65	∅1.61	∅1.65

Note
All these above orifice sizes will be stamped on each orifices.

5

For 4 & 5 burner models only
- Use Phillips head screw driver to remove cover from back panel
- Remove Infrared Orifice with 7mm wrench
- Install new orifice

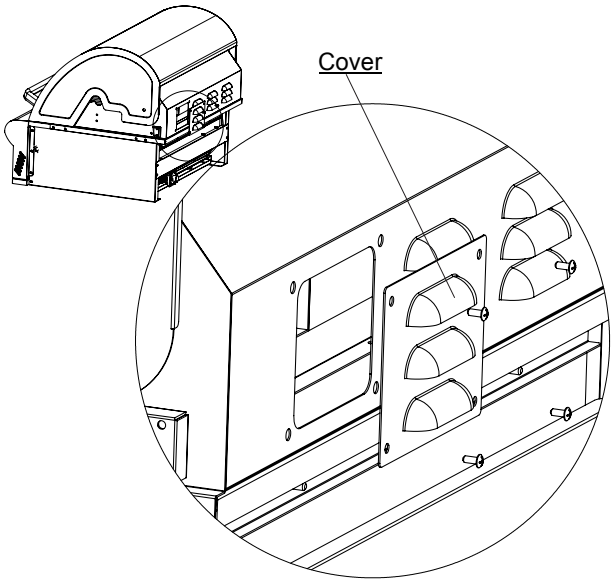

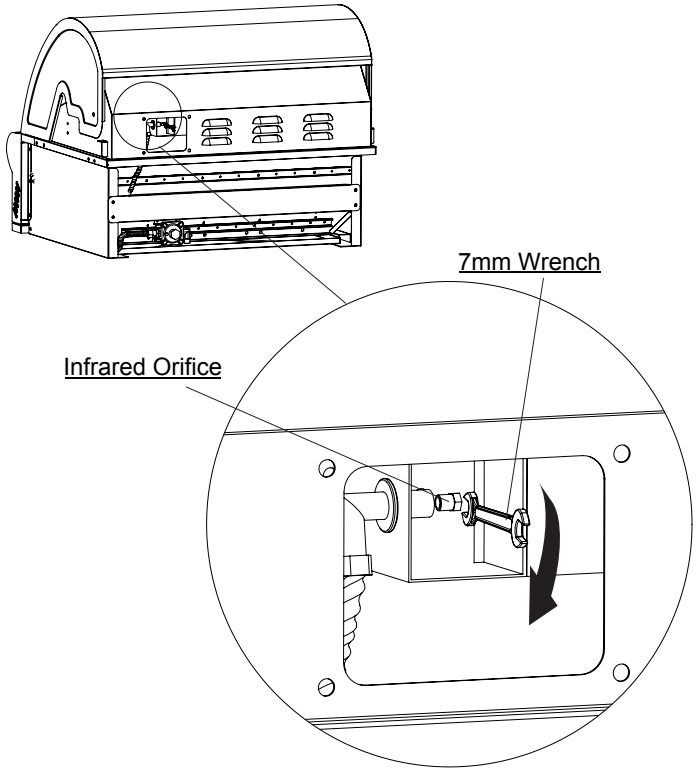

Gas Conversion

6

Convert regulator:
- Use adjustable wrench to remove regulator cap.
- Unscrew regulator stem, turn over and then reinstall.
- See diagram below for correct assembly of conversion gas type.
- Reinstall regulator cap tightly.

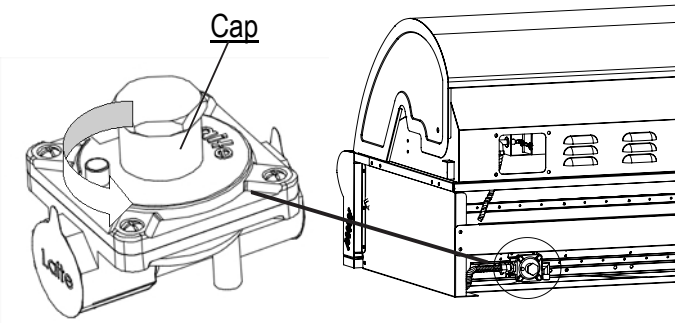

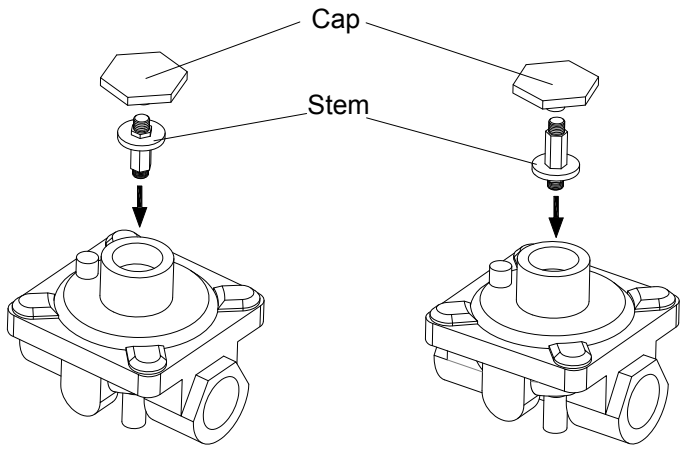

For Natural Gas

For LP Gas

7

Convert Valves:
- Remove control knobs.
- Using small flat head screw driver adjust the minimum rate screw as follows:

For Natural Gas - Counterclockwise to stop.
For Liquid Propane - Clockwise to stop
- Reinstall control knobs.

Note: The minimum rate screw setting for Natural Gas is turned all the way counterclockwise, for LP it should be turned all the way clockwise.

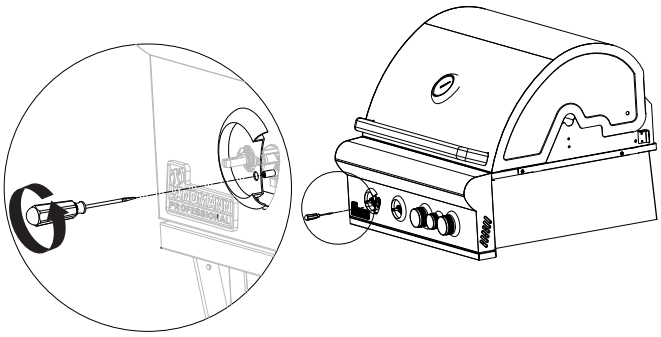

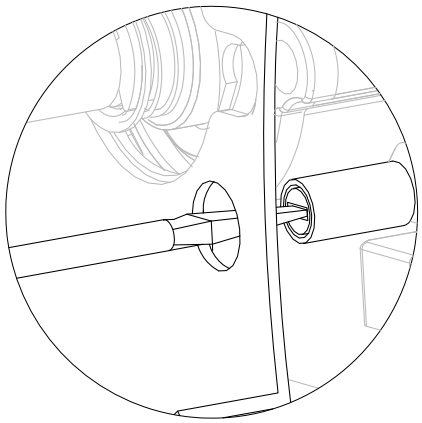

8

Record Conversion:
- The appliance rating label is located underneath the control panel
- Install conversion label supplied with the conversion kit over the left side of the rating label.
- Place parts that were removed for this conversion back in the parts bag for possible future use.

9

- Connect to gas source
- Check for leaks (see Checking for Leaks page).

Models: 43100 & 43101

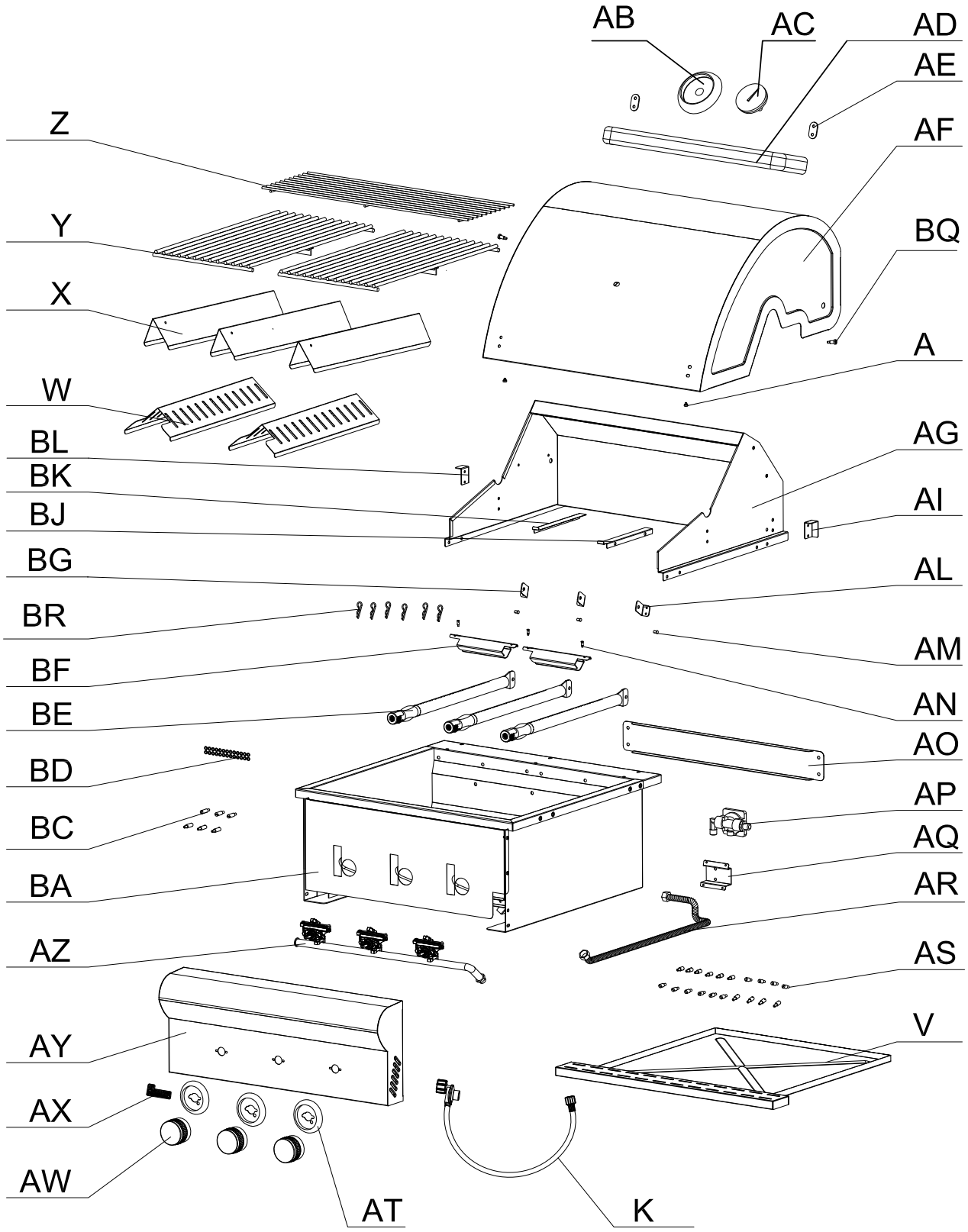

Replacement Parts

Models: 43100 & 43101

NO.	Description	Pcs on product	Part #
AB	Temperature gauge bezel	1	PF0024
AC	Temperature gauge	1	PF0025
AD	3B lid handle	1	PF0026
AE	Lid handle insulation washer	2	PF0027
AF	3B lid	1	PF0028
AG	3B Lid support	1	PF0029
AI	Lid support right bracket	1	PF0030
AL	Right main burner mounting bracket	1	PF0031
AM	Main burner pin	3	PF0032
AN	Flame crosser pin	3	PF0141
AO	3B grill body back brace	1	PF0033
AP	Regulator with straight and 90° fittings	1	PF0034
AQ	Regulator bracket	1	PF0035
AR	Main gas flex line	1	PF0036
AS	Cooking grate support pin	20	PF0037
V	3B drip tray	1	PF0019
K	LP hose & regulator	1	PF0010
AT	Main burner control knob bezel	3	PF0038
AW	Main burner control knob	3	PF0039
AX	Landmann logo	1	PF0040

NO.	Description	Pcs on product	Part #
AY	3B control panel	1	PF0041
AZ	3B gas manifold LP	1	PF0042
	3B gas manifold NG	1	PF0043
BA	3B grill firebox	1	PF0044
BC	Flame tamer support pin	6	PF0045
BD	Cooking grate support pin washer	26	PF0046
BE	Main burner	3	PF0047
BF	Flame crosser	2	PF0048
BG	Left main burner mounting bracket	3	PF0049
BJ	Warming rack right bracket	1	PF0050
BK	Warming rack left bracket	1	PF0051
BL	Lid support left bracket	1	PF0052
BQ	Lid hinge bolt & nut	2	PF0059
A	Rubber bumper	2	PF0001
BR	R clip	6	PF0060
W	Low heat shield	2	PF0020
X	Flame tamer	3	PF0021
Y	3B cooking grate	2	PF0022
Z	3B warming rack	1	PF0023

Parts not shown

Descriptions	Pcs on pruduct	Part #
Built In Grill Instruction Manual	1	PF0062
3B NG conversion kit w/tool (For LP grill only)	1	PF0064
3B LP conversion kit w/tool (For NG grill only)	1	PF0065

Models: 43102 & 43103

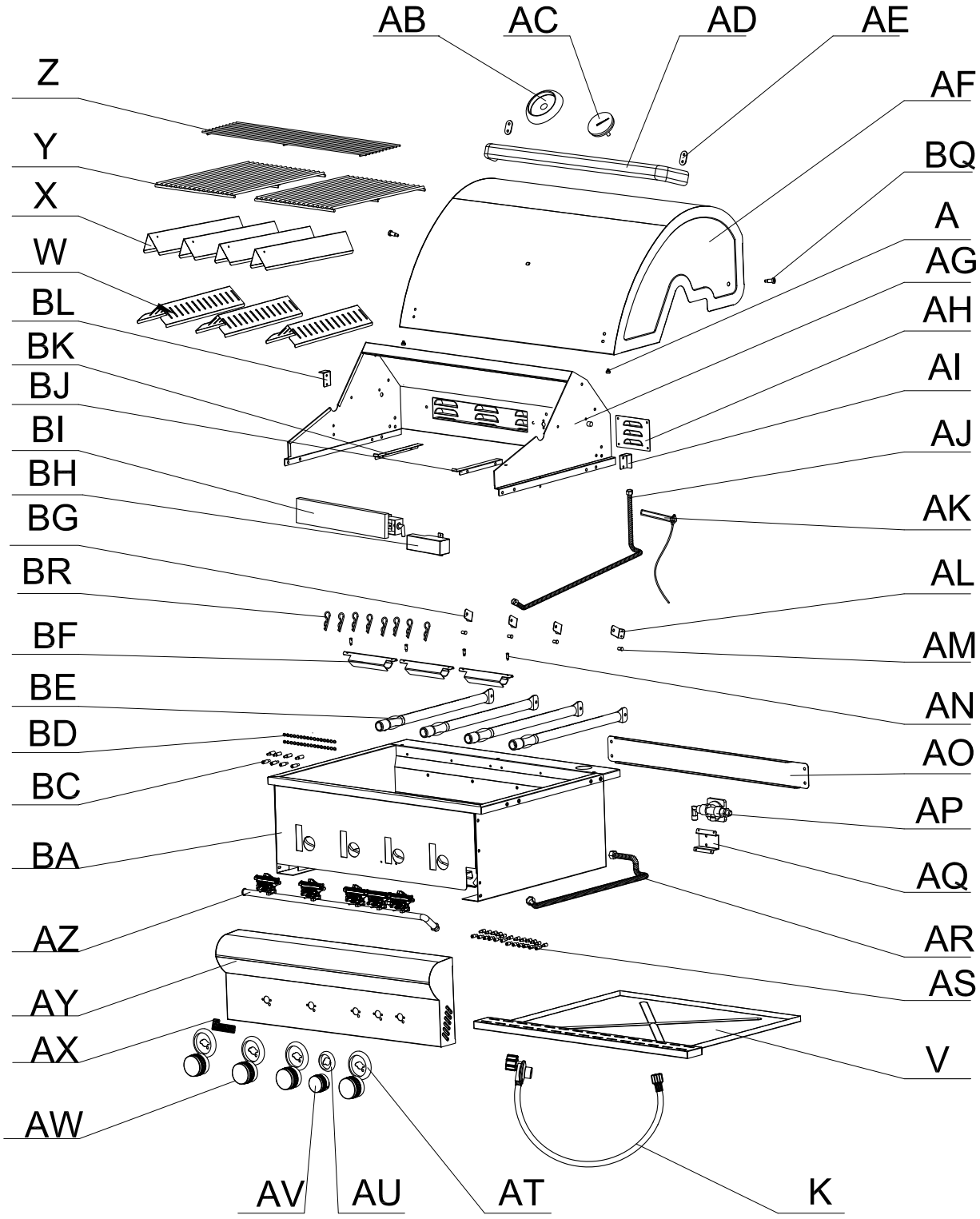

Replacement Parts

Models: 43102 & 43103

NO.	Description	Pcs on product	Part #
AB	Temperature gauge bezel	1	PF0024
AC	Temperature gauge	1	PF0025
AD	4B lid handle	1	PF0142
AE	Lid handle insulation washer	2	PF0027
AF	4B lid	1	PF0071
AG	4B Lid support	1	PF0072
AH	Rear burner back cover	1	PF0073
AI	Lid support right bracket	1	PF0030
AJ	Rear burner SS flex gas line	1	PF0074
AK	Rear burner electrode & wire	1	PF0075
AL	Right main burner mounting bracket	1	PF0031
BQ	Lid hinge bolt & nut	2	PF0059
A	Rubber bumper	2	PF0001
AM	Main burner pin	4	PF0032
AN	Flame crosser pin	4	PF0141
AO	4B grill body back brace	1	PF0076
AP	Regulator with straight and 90° fittings	1	PF0034
AQ	Regulator bracket	1	PF0035
AR	Main gas flex line	1	PF0036
AS	Cooking grate support pin	24	PF0037
AT	Main burner control knob bezel	4	PF0038
AU	Rear burner control knob bezel	1	PF0077
AV	Rear burner control knob	1	PF0078

NO.	Description	Pcs on product	Part #
AW	Main burner control knob	4	PF0039
V	4B drip tray	1	PF0068
K	LP hose & regulator	1	PF0010
AX	Landmann logo	1	PF0040
AY	4B control panel	1	PF0079
AZ	4B gas manifold LP	1	PF0080
	4B gas manifold NG	2	PF0081
BA	4B grill firebox	1	PF0082
BC	Flame tamer support pin	8	PF0045
BD	Cooking grate support pin washer	32	PF0046
BE	Main burner	4	PF0047
BF	Flame crosser	3	PF0048
BR	R clip	8	PF0060
BG	Left main burner mounting bracket	3	PF0049
BH	Rear burner ignition cover	1	PF0083
BI	4B rear burner	1	PF0084
BJ	Warming rack right bracket	1	PF0050
BK	Warming rack left bracket	1	PF0051
BL	Lid support left bracket	1	PF0052
W	Low heat shield	3	PF0020
X	Flame tamer	4	PF0021
Y	4B cooking grate	2	PF0069
Z	4B warming rack	1	PF0070

Parts not shown

Descriptions	Pcs on pruduct	Part #
Built In Grill Instruction Manual	1	PF0062
4B NG conversion kit w/tool (For LP grill only)	1	PF0149
4B LP conversion kit w/tool (For NG grill only)	1	PF0150

Models: 43104 & 43105

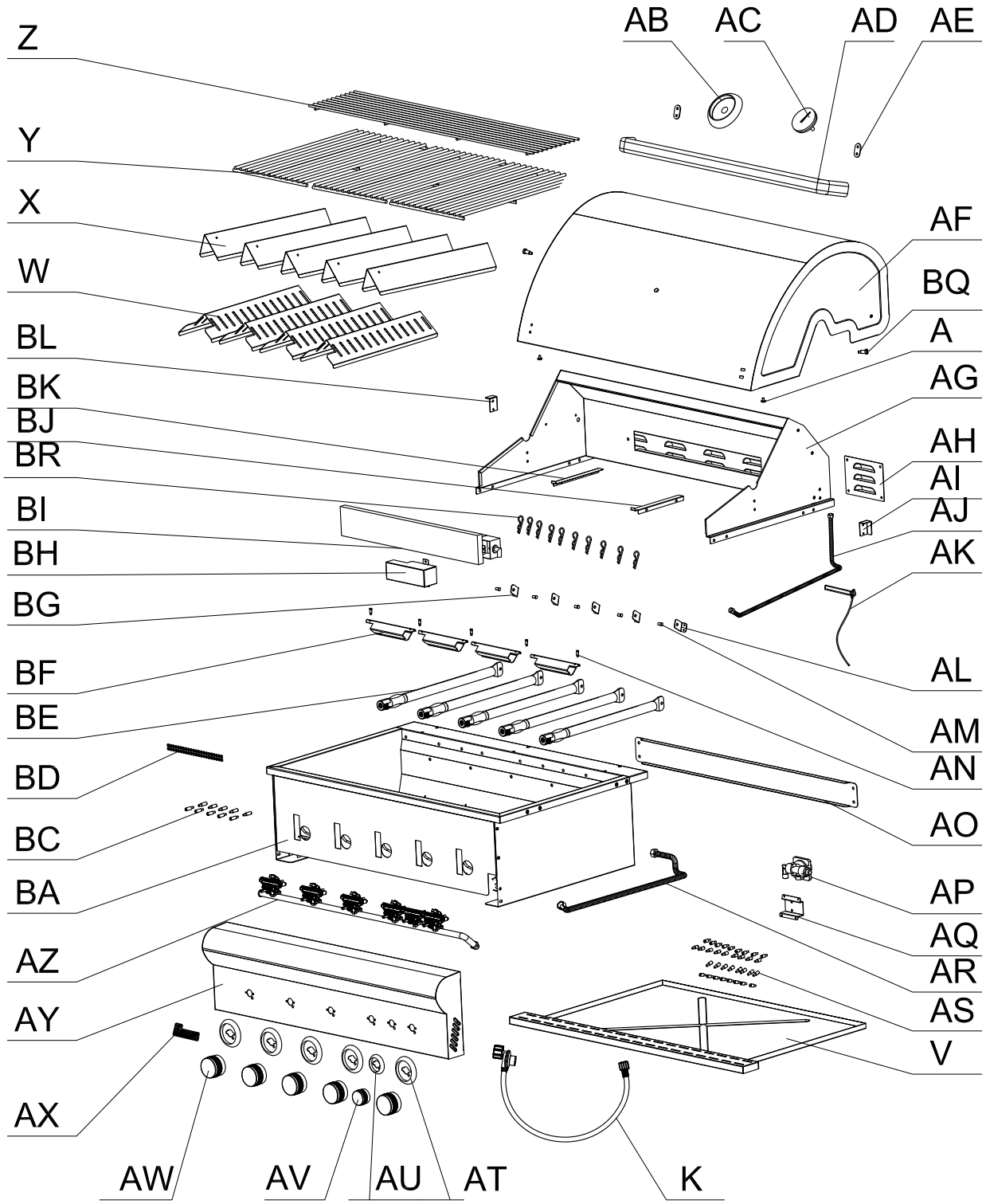

Replacement Parts

Models: 43104 & 43105

NO.	Description	Pcs on product	Part #
AB	Temperature gauge bezel	1	PF0024
AC	Temperature gauge	1	PF0025
AD	5B lid handle	1	PF0143
AE	Lid handle insulation washer	2	PF0027
AF	5B lid	1	PF0092
A	Rubber bumper	2	PF0001
BQ	Lid hinge bolt & nut	2	PF0059
AG	5B Lid support	1	PF0093
AH	Rear burner back cover	1	PF0073
AI	Lid support right bracket	1	PF0030
AJ	Rear burner SS flex gas line	1	PF0074
AK	Rear burner electrode & wire	1	PF0075
AL	Right main burner mounting bracket	1	PF0031
AM	Main burner pin	5	PF0032
AN	Flame crosser pin	5	PF0141
AO	5B grill body back brace	1	PF0094
AP	Regulator with straight and 90° fittings	1	PF0034
AQ	Regulator bracket	1	PF0035
AR	Main gas flex line	1	PF0036
AS	Cooking grate support pin	44	PF0037
AT	Main burner control knob bezel	5	PF0038
AU	Rear burner control knob bezel	1	PF0077
AV	Rear burner control knob	1	PF0078

NO.	Description	Pcs on product	Part #
AW	Main burner control knob	5	PF0039
V	5B drip tray	1	PF0089
K	LP hose & regulator	1	PF0010
AX	Landmann logo	1	PF0040
AY	5B control panel	1	PF0095
AZ	5B gas manifold LP	1	PF0096
	5B gas manifold NG	1	PF0097
BA	5B grill firebox	1	PF0098
BC	Flame tamer support pin	10	PF0045
BD	Cooking grate support pin washer	54	PF0046
BE	Main burner	5	PF0047
BF	Flame crosser	4	PF0048
BR	R clip	10	PF0060
BG	Left main burner mounting bracket	4	PF0087
BH	Rear burner ignition cover	1	PF0083
BI	5B rear burner	1	PF0099
BJ	Warming rack right bracket	1	PF0050
BK	Warming rack left bracket	1	PF0051
BL	Lid support left bracket	1	PF0052
W	Low heat shield	4	PF0020
X	Flame tamer	5	PF0021
Y	5B cooking grate	3	PF0090
Z	5B warming rack	1	PF0091

Parts not shown

Descriptions	Pcs on pruduct	Part #
Built In Grill Instruction Manual	1	PF0062
5B NG conversion kit w/tool (For LP grill only)	1	PF0151
5B LP conversion kit w/tool (For NG grill only)	1	PF0152

Limited Warranty

This Gas Grill is warranted to be free of defects in material and workmanship when properly assembled, used in a normal household setting and cared for as directed in these instructions from the date of the original retail purchase for the following durations:
Lifetime - Stainless steel panels
10 years - Stainless steel burners, cooking grates and flame tamers
1 year - all other parts

Rust, corrosion, scratches, discoloration or any damages due to improper use and care of this grill is excluded from this warranty.

All appliances must be properly installed by a qualified installation professional for the warranty to be in effect. Any appliances that are installed incorrectly will void the product warranty.

This warranty does not cover damage or issues related to neglect, abuse, accident, misuse, misapplication, improper assembly, transportation damages, commercial use or **ANY** modifications made to this product. Repair labor is not covered. This warranty is the only warranty offered and is in lieu of all other warranties, whether expressed or implied, which includes implied warranty, merchandising or use for a particular purpose.

All replacement parts that meet the warranty requirements will be shipped at no charge via the discretion of the manufacturer (ground shipments, US Mail, UPS or FedEx). Any special handling charges (i.e. Second Day, overnight, etc.) will be the responsibility of the consumer.

All warranty claims apply only to the original purchaser and require a proof of purchase verifying the purchase date. Do not return parts without first obtaining a return authorization number from our customer service department.

Our customer service department can be reached at 1-800-321-3473 8:00 AM - 5:00 PM (EST) English Only, or Email CustomerService@landmann-usa.com

Please note for the United States, that some state states do not allow the exclusion or limitation of incident or consequential damages or limitations on how long an implied warranty lasts, so the above limitations or exclusions may not apply to you. This warranty gives you specific legal rights and you may also have other legal rights which may vary from state to state.

LANDMANN
PROFESSIONAL

7405 Graham Road
Fairburn, Georgia 30213

www.landmann-professional.com