MONESSEN HEARTH SYSTEMS

INSTALLATION AND OPERATING INSTRUCTIONS

"DUZY" Series

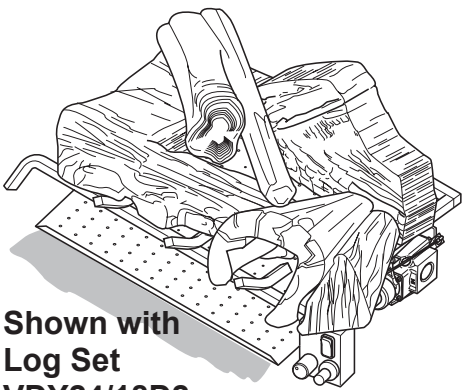

Shown with Log Set VDY24/18D2

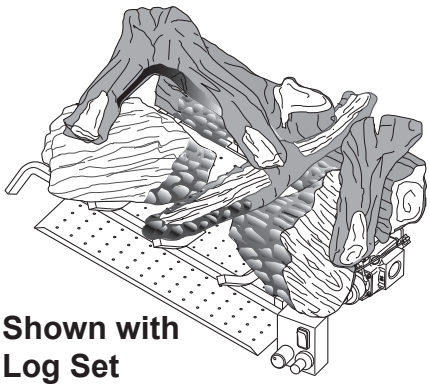

Shown with Log Set VDY30D3R

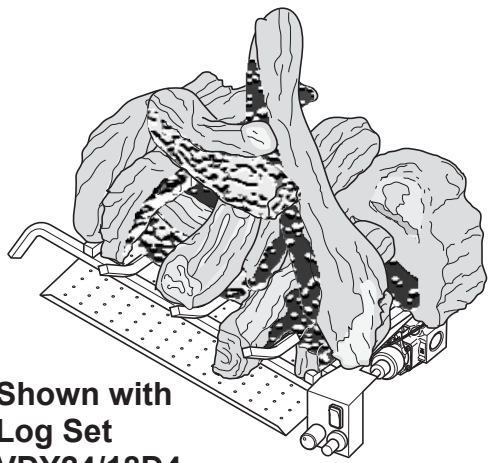

Shown with Log Set VDY24/18D4

MODELS: VDY24/18 • VDY30

Natural Gas or Propane/LPG Control Type: Manual or Milli-Volt

DESIGN CERTIFIED

MADE IN U.S.A.

Approved to ANSI Z21.60

This gas log set is to be installed only in a solid-fuel burning fireplace with a working flue constructed of noncombustible material.

WARNINGS

If the information in this manual is not followed exactly, a fire or explosion may result causing property damage, personal injury or loss of life.

- **Do not store or use gasoline or other flammable vapors and liquids in the vicinity of this or any other appliance.**
- **WHAT TO DO IF YOU SMELL GAS**
  - **Do not try to light any appliance.**
  - **Do not touch any electrical switch; do not use any phone in your building.**
  - **Immediately call your gas supplier from a neighbor's phone. Follow the gas supplier's instructions.**
  - **If you cannot reach your gas supplier, call the fire department.**
- **Installation and service must be performed by a qualified installer, service agency or the gas supplier.**

READ AND SAVE THESE INSTRUCTIONS

TABLE OF CONTENTS

Important Safety Information 3

Getting Started 4

Product Specifications 5

Product/Features Specifications 6

Placement in a Fireplace with a Restrictive Barrier 7

Installation 8

Connecting the Gas..... 9

Electrical Wiring (Millivolt).....11

Log Placement 12

Fireplace Draft Test 16

Flame Appearance 17

Operating Instructions 18

For Your Safety Read Before Lighting 18

Manual Control Lighting Instructions 18

Milli-Volt Control Lighting Instructions 19

Safety Instructions for Manual Control without Pilot 20

Optional Remote Receiver 21

Cleaning and Servicing 22

Illustrated Parts List 23

Troubleshooting 27

Warranty .....Back Cover

INSTALLER
Please leave these instructions with the owner.

OWNER
Please retain these instructions for future reference.

IMPORTANT
Read these instructions carefully before installing or trying to operate this gas log set.

WARNING

Any modification to this gas log set or its controls can be dangerous. Improper installation or use of the gas log set can cause serious injury or death from fire, burns, explosion or carbon monoxide poisoning.

1. The installation, combustion and ventilation air must conform with local codes or, in the absence of local codes, with the National Fuel Gas Code, ANSI Z223.1.
2. This unit complies with *ANS Z21.60-1996 • CGA 2.26-M96* Decorative Gas Appliance for Installation in Solid-Fuel Burning Fireplace. The natural gas manual control unit without the pilot complies with IAS U.S. 7-94. Manually Lighted, Natural Gas Decorative Gas Appliance for Installation in Solid-Fuel Burning Fireplaces.
3. Installation and repair should be done by a qualified service person. Monessen Vented Gas Logs must be installed only in a solid-fuel (wood) burning fireplace which can only be constructed of non-combustible material, with minimum venting requirements, see installation section.
4. To prevent malfunction, gas log set and flue should be cleaned at least annually by a professional service person. More frequent cleaning may be required due to excessive lint from carpeting, etc. It is imperative that control compartments, burners and circulating air passageways be kept clean.
5. Correct installation of the ceramic fiber logs, and annual cleaning are necessary to minimize problems with sooting. See log placement instructions for proper installation.
6. A damper clamp must be installed to provide the minimum permanent vent opening to vent flue products, Refer to installation instructions.
7. Never burn solid fuels in a fireplace where a gas log set is installed.
8. ***This appliance must not be used with glass doors in the closed position.*** Provisions for adequate combustion air must be provided, adequate combustion air usually results in all flames curling into the fireplace away from screen and up the flue.
9. Keep room area clear and free from combustible materials, gasoline and other flammable vapors and liquids.
10. Children and adults should be alerted to the hazard of high surface temperature and should stay away to avoid burns or clothing ignition.
11. Young children should be carefully supervised when they are in the same room with the gas log set in operation.
12. Do not place clothing or other flammable material near the fireplace when the gas logs are in use.
13. Do not use this gas log set if any part has been underwater. Immediately call a qualified service technician to inspect the gas logs and replace any part of the control system and any gas control which has been under water.
14. The gas log set and its individual shutoff valve must be disconnected from the gas supply piping system during any pressure testing of the gas supply piping system at test pressures in excess of 1/2 psig (3.5kPa).
15. The gas log set must be isolated from the gas supply piping system by closing its individual manual shutoff valve during any pressure testing of the gas supply piping system at test pressures equal to or less than 1/2 psig (3.5kPa).
16. ***FOR MASSACHUSETTS RESIDENTS ONLY:*** Installation of this vented gas log in the Commonwealth of Massachusetts requires the damper be permanently removed or welded in the full open position. In addition, a naturally vented gas log may not be installed in a bedroom or bathroom in the commonwealth of Massachusetts.

WARNING

This appliance is for installation only in a solid fuel burning fireplace (masonry fireplace or manufactured fireplace)

GETTING STARTED

MAKE SURE YOU HAVE RECEIVED ALL PARTS:

Check your packing list to verify that all listed parts have been received. You should have the following:

BURNER - GRATE ASSEMBLY 24/18, 30

- Burner and Grate Weldment Assembly
- Glowing Embers (Rock Wool)
- Installation /Operating Instructions
- Lava Rocks (x2)
- Damper Clamp
- Masonry Screws (2)
- 3/8" Aluminum tube with 3/8" 90° elbow, 1/2" to 3/8" tubefitting

CERAMIC FIBER LOGS 24/18, 30

- Individual Logs
- Installation Instructions

CAUTION

- **Handle the gas log burner assembly by the grate only. Do not pick the unit up by the burner.**
- **Gloves are recommended when handling ceramic fiber logs to prevent skin irritation from loose fibers. Logs are fragile — handle with care.**

Carefully inspect the contents for shipping damage. If any parts are missing or damaged, immediately inform the dealer from whom you purchased the appliance. **Do not attempt to install any part of the appliance unless you have all parts in good condition.**

ITEMS REQUIRED FOR INSTALLATION

Ensure that the following items are available before proceeding with installation:

- External regulator (for propane/L.P.G. only)
- Piping which complies with local codes
- Tee joint
- Pipe sealant approved for use with propane/L.P.G. (Resistant to sulfur compounds)
- Drill with masonry bit (for mounting to the floor)
- Manual shutoff valve
- Pipe wrench

NATURAL GAS

Manual Pressure

Regulator Pressure Setting: 4" w.c.
Gas Inlet Pressure: Max. 10 1/2" w.c.
Min. 6" w.c.

Milli-Volt Pressure

Regulator Pressure Setting: 4.0" w.c.
Gas Inlet Pressure: Max. 10 1/2" w. c. • Min. 6" w.c.

Model Number	Pilot	Control Type	Gas Rate Min BTU/Hr
VDY24/18NMP	Yes	Manual *(Thermocouple)*	50,000
VDY24/18NM	No	Manual	50,000
VDY24/18VP	Yes	Milli-Volt *(Thermopile)*	50,000
VDY30NMP	Yes	Manual *(Thermocouple)*	65,000
VDY30NM	No	Manual	65,000
VDY30NVP	Yes	Milli-Volt *(Thermopile)*	65,000

PROPANE/LPG

Note: An external regulator is required to reduce supply pressure to a maximum of 13" w.c.

Manual Pressure

Regulator Pressure Setting: 10" w.c.
Gas Inlet Pressure: Maximum 13" w.c.
Minimum 11" w.c.

Milli-Volt Pressure

Regulator Pressure Setting: 10" w.c.
Gas Inlet Pressure: Maximum 13" w.c.
Minimum 11" w.c.

Model Number	Pilot	Control Type	Gas Rate Min BTU/Hr
VDY24/18PMP	Yes	Manual *(Thermocouple)*	50,000
VDY24/18PVP	Yes	Milli-Volt *(Thermopile)*	50,000
VDY30PMP	Yes	Manual *(Thermocouple)*	65,000
VDY30PVP	Yes	Milli-Volt *(Thermopile)*	65,000

IGNITION CONTROLS

Piezo ignitor allows ignition of the pilot without the use of matches or batteries.

Manual control with pilot has three (3) positions:

OFF - All gas to the gas logs is shut off at the valve.
IGN - Valve position to light/maintain a standing pilot.
ON - Valve position to light/maintain the gas burner.

Manual control without pilot has two (2) positions:

OFF - All gas to the gas logs is shut off at the valve.
ON - Valve position to light/maintain the gas burner.

Milli-Volt control with pilot has three (3) positions:

OFF - All gas to the gas logs is shut off at the valve.
IGN - Valve position to light/maintain a standing pilot.
ON - Valve position to light/maintain the gas burner.

PRODUCT / FEATURES SPECIFICATIONS

MANUAL SERIES (W/ PILOT AND W/O PILOT)

Model	A	B	C	D
VDY 24/18	17	13 1/2	26	16
VDY 30	23	13 1/2	32	16

MILLIVOLT SERIES (W/ PILOT)

Model	A	B	C	D
VDY 24/18	18	13 1/2	26	16
VDY 30	24	13 1/2	32	16

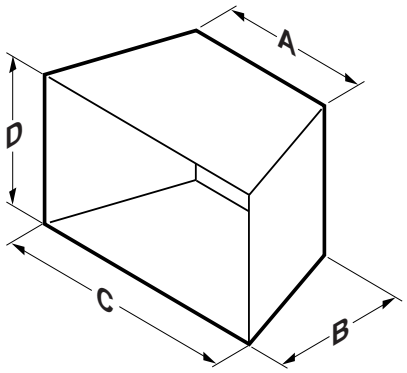

Figure 1 - Minimum Hearth Dimensions

In compliance with IAS U.S. 7-94, ANS Z21.60-1996 • CGA 2.26-M96 and National Fuel Gas Code, Section 6.6

BEFORE INSTALLING THE APPLIANCE:

- Turn off gas supply to masonary fireplace or manufactured wood burning firebox.
- Have the fireplace floor and chimney professionally cleaned to remove ashes, soot, creosote or other obstructions. Have this cleaning performed annually after installation.
- Seal any fresh air vents or ash clean-out doors located on floor or wall of fireplace. If not, drafting may cause pilot outage or sooting. Use a heat-resistant sealant.

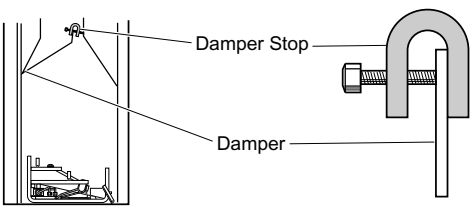

Figure 2 - Damper Stop Installation

INSTALL AND OPERATE THE APPLIANCE AS DIRECTED IN THIS MANUAL.

DAMPER STOP INSTALLATION:

A damper stop is provided with the unit. The damper stop must be installed as shown in (Figure 2) to prevent full closure of the fireplace damper blade and provide a minimum flue opening, per table below.

Should the clamp not fit, or provide the required permanent opening from the table have the damper blade cut to provide minimum permanent opening or a permanent stop installed.

FOR MASSACHUSETTS RESIDENTS ONLY

Installation of this vented gas log set in the Commonwealth of Massachusetts requires the damper be permanently removed or welded in the fully open position. In addition, a naturally vented gas log may not be installed in a bedroom or bathroom in the Commonwealth of Masasachusetts.

Chimney Height	VDY24/18N	VDY30N
6'	51 sq in	64 sq in
8'	51 sq in	64 sq in
10'	51 sq in	64 sq in
15'	39 sq in	51 sq in
20'	39 sq in	51 sq in
30'	39 sq in	51 sq in

Minimum Opening Area of Chimney Damper for Venting

WARNING

The fireplace and gas logs function as a system. If the fireplace is spilling into the room (check with a match or smoke stick). Reposition the damper clamp until a positive draft is obtained, by opening the damper. If negative pressure in the home prevents having a positive draft contact your dealer.

PLACEMENT IN A FIREPLACE WITH A RESTRICTIVE BARRIER

IMPORTANT INFORMATION FOR THE INSTALLATION OF THIS GAS LOG SET

The following are guidelines for placing a gas log set in a fireplace that has a restrictive barrier along the bottom front opening of the fireplace. Some examples of barriers are glass/screen door frames and sunken/recessed fireplaces.

Height of Restriction (X)	Minimum Depth of Fireplace/Firebox
No restriction	13 1/2"
0 to 1.5"	15"
Greater than 1 1/2" to 3"	15"
Greater than 3"	ANY BARRIER GREATER THAN THREE INCHES (3") PLACED IN FRONT OF THE GAS LOG SET IS NOT RECOMMENDED BY THE MANUFACTURER.

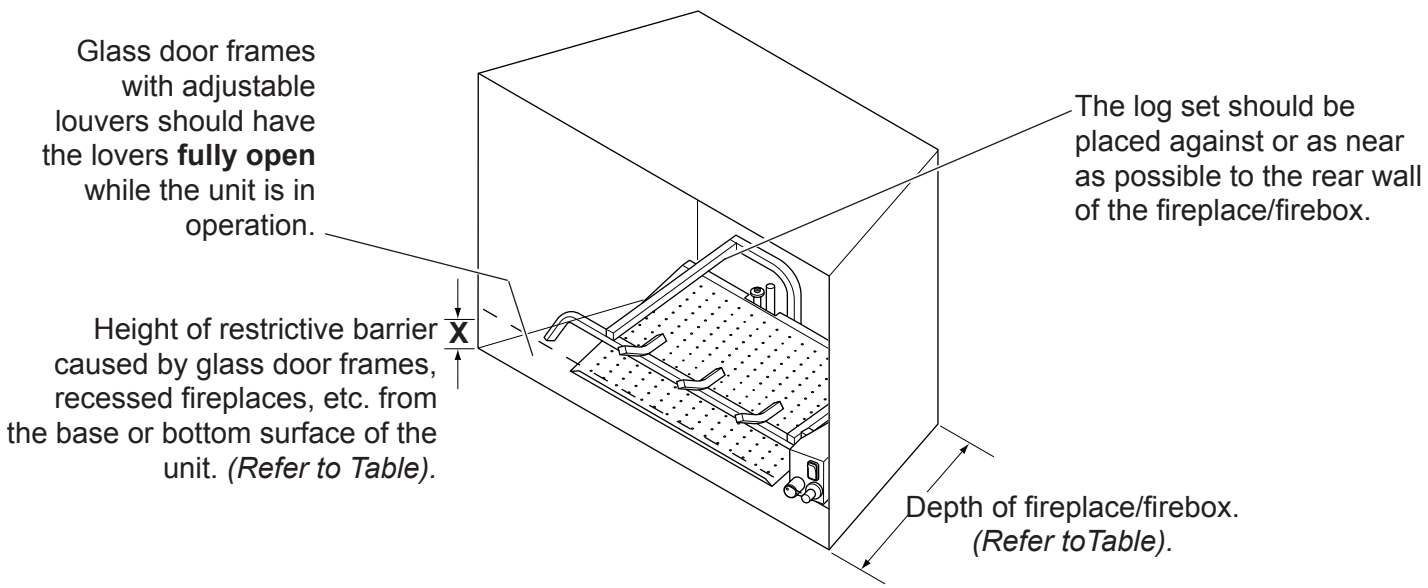

Figure 3 - Reference Drawing of a Log Set in an Enclosure

WARNING

Barriers such as the bottom of a glass door frame placed in front of a gas log set can change the air flow characteristics of the fireplace which in turn can cause the unit to overheat and malfunction. Any deviation from the installation guidelines on this sheet will potentially void the warranty.

NOTE: Non combustible material such as refractory brick may be used to line the floor of the fireplace in order to raise the height of the gas log set in relation to a restrictive barrier. If the unit is raised, THE MINIMUM HEIGHT DIMENSION LISTED IN THE HOMEOWNER'S MANUAL MUST NOT BE EXCEEDED.

NOTE: If the log set is equipped with a remote receiver, a restrictive barrier may reduce the battery life by increasing the ambient temperature inside the fireplace. Placement of the receiver outside of the fireplace will extend the battery life.

INSTALLATION

PLACING AND SECURING APPLIANCE

WARNING

You must secure the gas log heater to the fireplace floor. Properly securing the grate prevents movement of the entire unit when you adjust the controls. Grate movement could cause a gas leak.

ASSEMBLY PROCEDURE

1. Center the gas log unit in the fireplace or firebox. Make certain the front feet of the grate sit inside the front edge of the fireplace or firebox.
2. *Refer to Figure 4* for hole locations. After centering the grate correctly, mark the hole positions on the fireplace/firebox floor. Drill two (2) $^{5}/_{32}$" diameter holes approximately $1^{1}/_{2}$" deep.
3. Anchor the grate to the fireplace/firebox floor using the screws provided. *Refer to Figure 4.*

Proper installation of the grate is essential to prevent any movement of the gas logs and controls during operation.

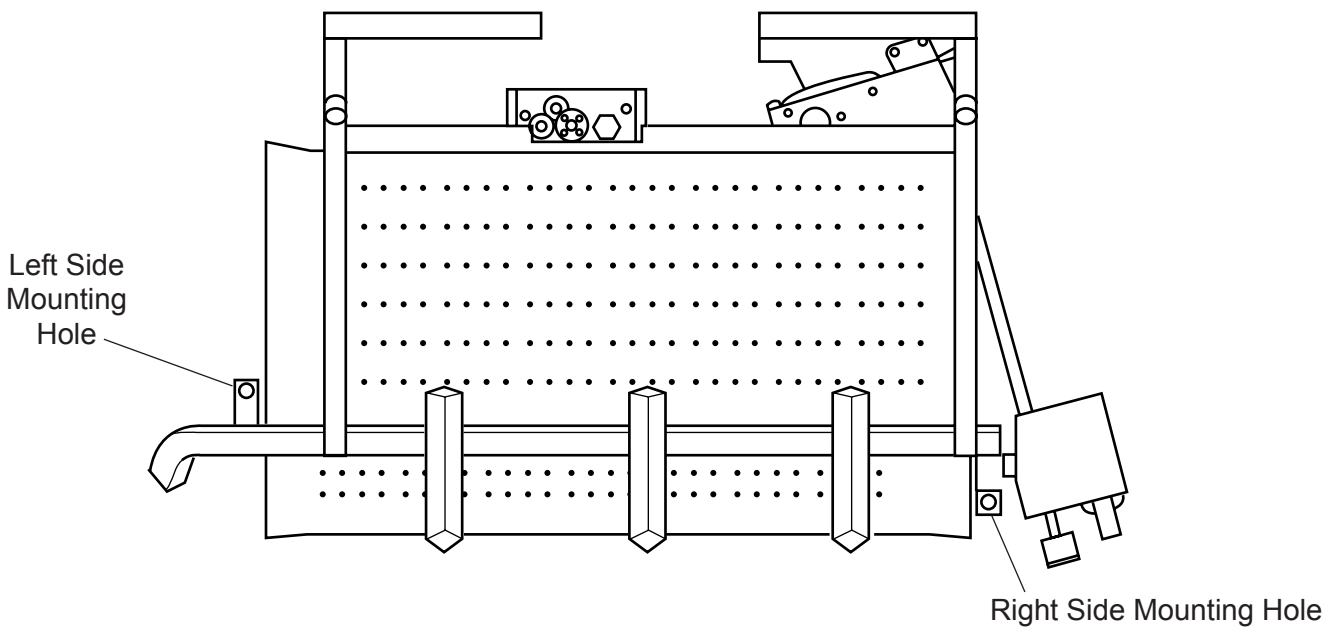

Figure 4 - Securing Heater to Floor of Fireplace/Firebox

NOTICE

NOTICE: A qualified gas appliance installer must connect the appliance to the gas supply. Consult all local codes before installation.

CAUTION

Use new black iron pipe, steel pipe, copper tubing, or internally tinned copper tubing. Copper or internally tinned copper tubing can only be used according to the National Fuel Gas Code, section 2.6.3, providing gas meets sulfide limits, and where permitted by local codes. Gas piping system must be sized to provide minimum inlet pressure (listed on Data Plate) at the maximum flow rate (BTU/Hr). Undue pressure loss will occur if the pipe is too small.

A manual shutoff valve must be installed upstream of the appliance. Union tee and plugged 1/8" NPT pressure tapping point should be installed upstream of the appliance. Refer to *Figure 5.*

WARNING

Connecting directly to an unregulated propane/LPG tank can cause an explosion

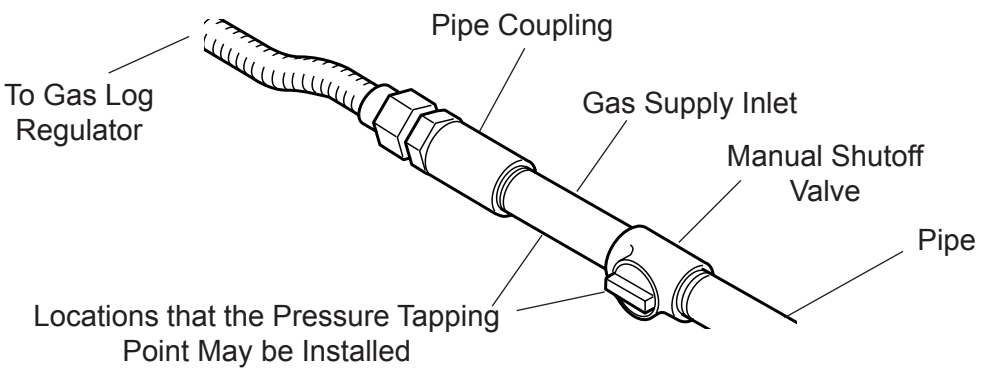

Figure 5 - Gas Connection

IMPORTANT: Hold appliance regulator firmly with a wrench to prevent movement when connecting to inlet piping.

Check gas type: The gas supply must be the same as stated on the gas logs rating plate. If the gas supply is different, **DO NOT INSTALL THE GAS LOGS.** Contact your dealer for the correct model.

Always use an external regulator for all propane/LPG gas logs only, to reduce the supply tank pressure to a maximum of 13" w.c. This is in addition to the regulator fitted to the gas log set. High pressure natural gas systems require a regulator to reduce supply pressure to 10" W.C.

CONNECTING THE GAS

The heater gas inlet connection is 3/8" NPT at the regulator, inlet on the right side facing the gas log. If a left side connection is required, the connecting pipe may be led under the rear of the gas logs or behind the grate for connection to the inlet.

NOTE: The milli-volt valve has an internal regulator, thus the incoming gas line connects directly to the valve.

Test all gas joints from the gas meter to the appliance regulator for leaks using a gas analyzer or soap and water solution after completing connection. **DO NOT USE AN OPEN FLAME.**

Check the gas pressure with the appliance burning.

MANUAL CONTROL *(Figure 6)*

The pressure regulator is preset and locked to discourage tampering. If the pressure is not as specified, replace with the correct part from the parts list in this manual.

Remove $^{1}/_{8}$" NPT plug, located on side of regulator body. Install fitting and tubing to pressure gauge. After taking pressure reading, re-install test plug. Check for gas leaks.

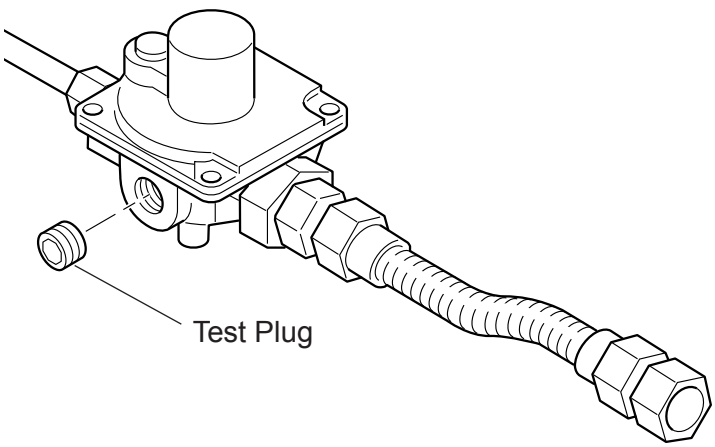

Figure 6 - Pressure Test Point Location

MILLIVOLT CONTROL *(Figure 7)*

The valve regulator controls the burner pressure which should be checked at the pressure test point. Turn captured screw counter clockwise 2 or 3 turns and then place tubing to pressure gauge over test point (Use test point labeled "OUT"). After taking pressure reading, be sure and turn captured screw clockwise firmly to re-seal. Do not over torque. Check for gas leaks.

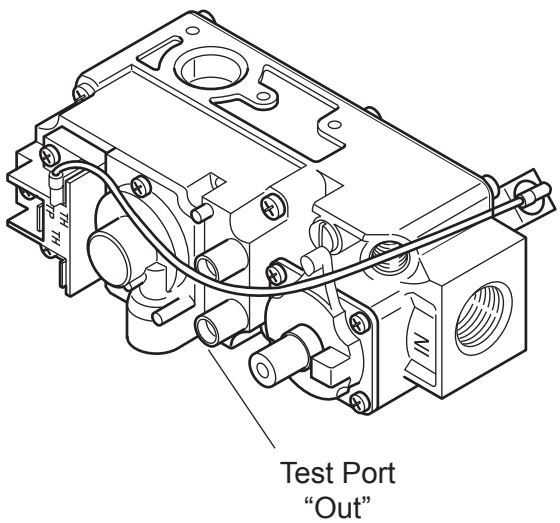

Figure 7 - Pressure Test Point Location

WARNING

Label all wires prior to disconnection when servicing controls. Wiring errors can cause improper and dangerous operation. Verify proper operation after servicing.

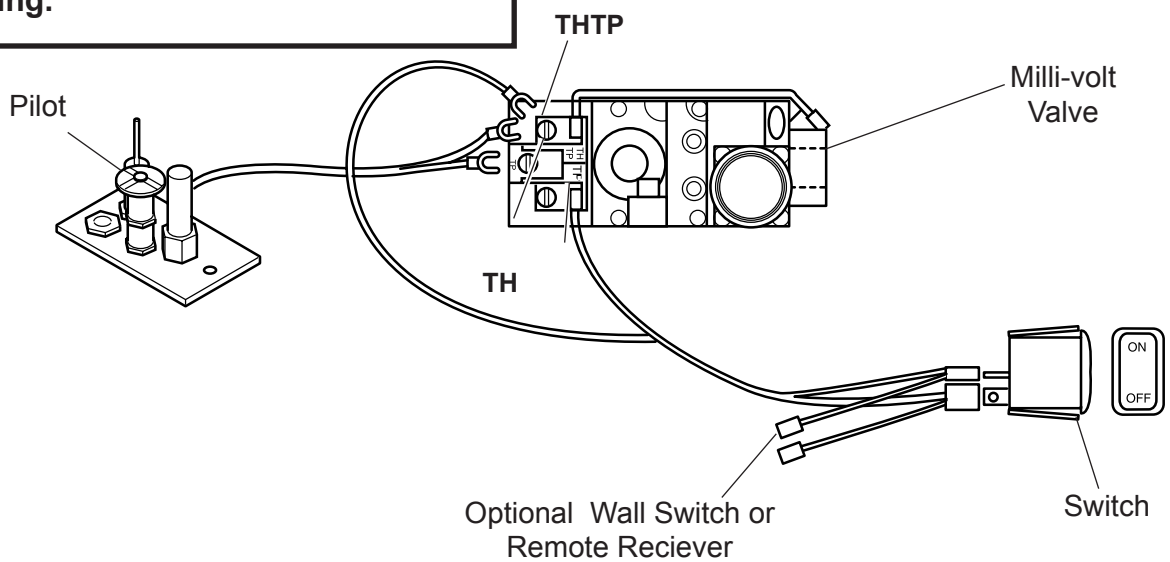

Figure 8 - Wiring Diagram

The Milli-Volt (thermopile) is a self powered combination gas control that does not require 110VAC to operate. Refer to *Figure 8* and installation instructions provided with optional wall switch or remote control for wiring instructions. A maximum length of 15 feet of 18awg two conductor wire is to be used for wall switch. Note switches must be suitable for millivolt operation.

CHECKING SYSTEM OPERATION

The millivolt system and individual components may be checked with a millivolt meter having a 0-1000MV range. Conduct each check shown in chart below by connection meter test leads to terminals as indicated.

CHECK TEST	TO TEST	CONNECT METER LEADS TO TERMINALS	METER READING SHOULD BE
A	COMPLETE SYSTEM	TH & THTP	CLOSED
B	THERMOPILE OUTPUT	TH & THTP	OPEN

A. COMPLETE MILLIVOLT SYSTEM CHECK ("A" READING - THERMOSTAT CONTACTS CLOSED - CONTROL KNOB "ON" - MAIN BURNER SHOULD BE COME ON)

a. If the reading is more than 100 millivolts and the automatic valve still does not come on - replace the control.

b. If the closed circuit reading (“A” reading) is less than 100 millivolts, determine cause for low reading - proceed as follows:

B. THERMOPILE OUTPUT READING CHECK (“B” READING - THERMOSTAT CONTACTS OPEN - MAIN BURNER OFF)

a. 325 millivolts minimum. If the minimum millivolt reading is not obtainable, readjust pilot for maximum millivolt output. If millivolt reading is still below minimum specified, replace thermopile.

LOG PLACEMENT

LOG PLACEMENT

IMPORTANT: Remove logs, handling carefully by holding gently at each end. Gloves are recommended to prevent skin irritation from ceramic fibers. If skin becomes irritated, wash gently with soap and water.

DUZY 24 (VDY24/18D) LOG INSTALLATION SEQUENCE:

1. Install the rear log (#1) on the two locating pins. Visually check to verify the log is securely placed on the pins and in contact with the grate. *See Figure 9.*
2. Install the right log (#2) on top of the control cover. Slide the log back until touching the rear log (#1). Visually check to verify the log is resting on the grate and control cover. *See Figure 9.*
3. Install the left log (#3) with its bottom groove resting on the right side of the grate bar. Slide the log back until touching the rear log (#1). Visually check to verify the log is resting on the grate. *See Figure 9.*
4. Install the top right log (#4) with the two branches resting on the two grate fingers in the front and the back resting on the pad of the rear log (#1). Visually check to verify the log is resting on its notches with the grate and rear log. *See Figure 9.*
5. Install the top left log (#5) with the branch resting on the remaining front grate finger and the two branches resting on the pads of the rear log (#1). *See Figure 9.*

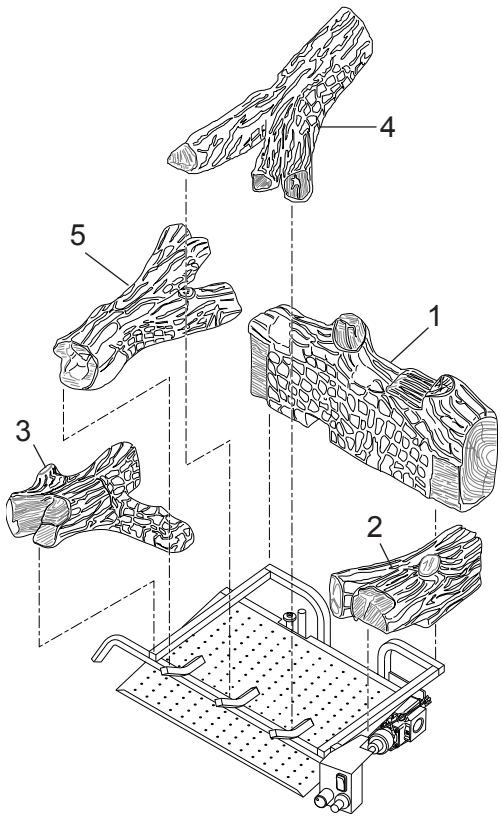

Figure 9 - VDY24/18D Log Placement

DUZY 30 LOG (VDY30D) INSTALLATION SEQUENCE:

1. Install the rear log (#1) on the two locating pins. Visually check to verify the log is securely placed on the pins, and in contact with the grate. *See Figure 10.*
2. Install the right log (#2) on top of the control cover. Slide the log back until touching the rear log (#1). Visually check to verify the log is resting on the grate and control cover. *See Figure 10.*
3. Install the left log (#3) with its bottom groove resting on the right side of the grate bar. Slide the log back until touching the rear log (#1). Visually check to verify the log is resting on the grate. *See Figure 10.*
4. Install the top right log (#4) with the back resting on right log (#2) and the front resting on the burner. Pull the front of the log forward until it touches the front great finger. *See Figure 10.*
5. Install the top left log (#5) with the back resting on left right log (#3) and the front resting on the burner. Pull the front of the log forward until it touches the front grate finger. *See Figure 10.*
6. Install the top right center log (#6) with the two branches resting on the two left-hand side front grate finger and back of the log on the pad of the rear log (#1). *See Figure 10.*
7. Install the top left center log (#7) with the branch resting on the front grate finger and the two branches resting on the pads at the center of the rear log (#1). *See Figure 10.*

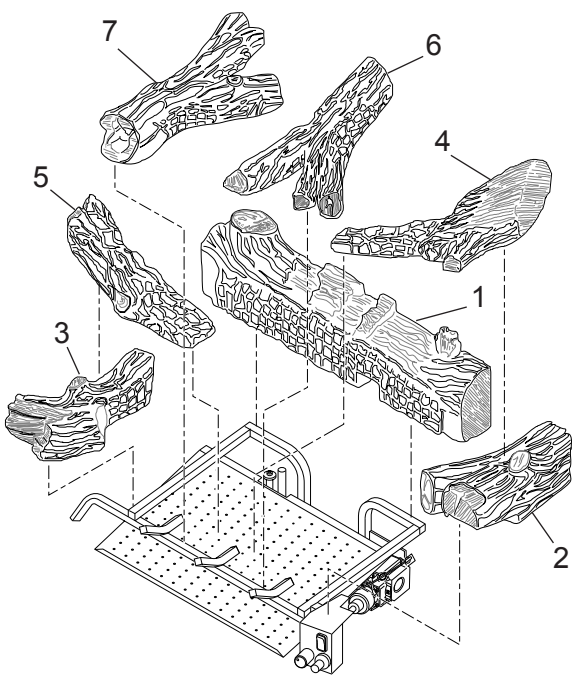

Figure 10 - VDY30D Log Placement

DUZY II (VDY24/18, 30)D2 LOG INSTALLATION SEQUENCE:

1. Install the rear log (#1) on the two locating pins. Visually check to verify the log is securely placed on the pins and in contact with the grate. *See Figure 11.*
2. Install the right log (#2) on top of the control cover. Slide the log back until touching the rear log (#1). Visually check to verify the log is resting on the grate and control cover. *See Figure 11.*
3. Install the left log (#3) with its bottom groove resting on the right side of the grate bar. Slide the log back until touching the rear log (#1). Visually check to verify the log is resting on the grate. *See Figure 11.*
4. Install the top right log (#4) with the base sitting on the rear log (#1) and the top sitting on log (#4). Visually check to verify the log is resting on the rear log (#1) and left log (#3). *See Figure 11.*

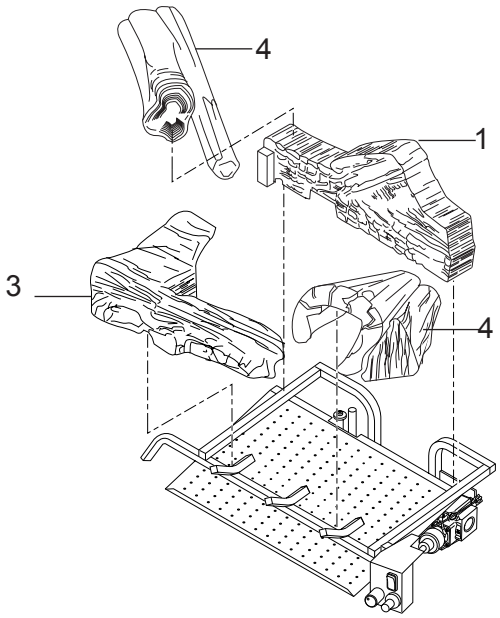

Figure 11 - VDY24/18D2, 30 Log Placement

DUZY 3R (VDY24/18D3R, VDY30D3R) LOG INSTALLATION SEQUENCE:

1. Line up pins on bottom of Rear Log #1 with pins on grate bar and place on grate. *See Figure 13.*
2. Place Front Left Log #2 on left front of grate bar lining up cutout in bottom of log with grate bar. *See Figure 12.*
3. Place Front Right Log #3 on right front of grate bar lining up cutout in bottom of log with grate bar. Make sure Log #3 touches Log #1. *See Figure 12*.
4. Place back end Top Middle Log #4 on Log #1. Press the side of Log #4 up against raised area of Log #1. Line up notch in front end of #4 with grate bar. *See Figure 12.*
5. Rest Top Right Log #5 on Log #3. *See Figure 12.*
6. Line up Top Left Log #6 with notches on Log #2 and Log #4. *See Figure 12.*

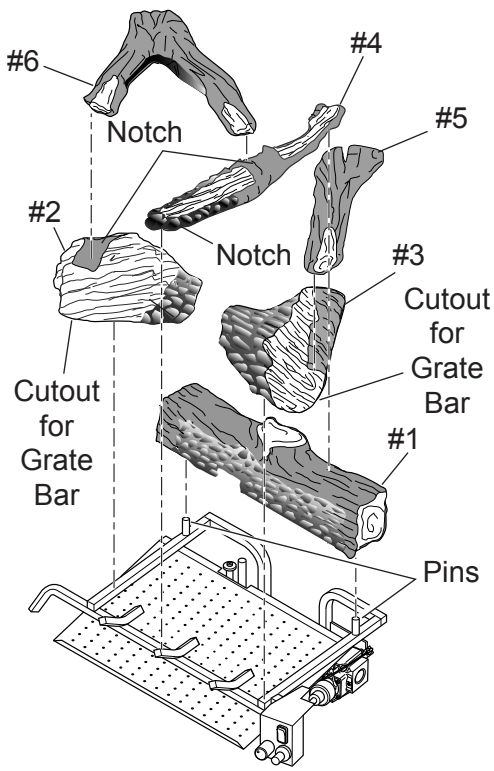

Figure 12 -* VDY24/18D3R, VDY30D3R *Log Placement

LOG PLACEMENT

DUZY4R LOG INSTALLATION SEQUENCE:

Note: Models VDY24/18D4 has six (6) logs and Model VDY30D4R has seven (7) logs

1. Place Bottom Front Log (#2) on front of grate. *See Figure 13.*
2. Place Back Log (#1) on back of grate lining up two (2) pins on grate with holes in bottom of log. *See Figure 14.*
3. Place Left Top Log (#3) on left end of Bottom Front and Back Logs. *See Figure 15.*
4. Place Center Crossover Log (#4) across middle of Bottom Front and Back Logs. *See Figure 16.*

Figure 13 - Placing Front Log (#2)

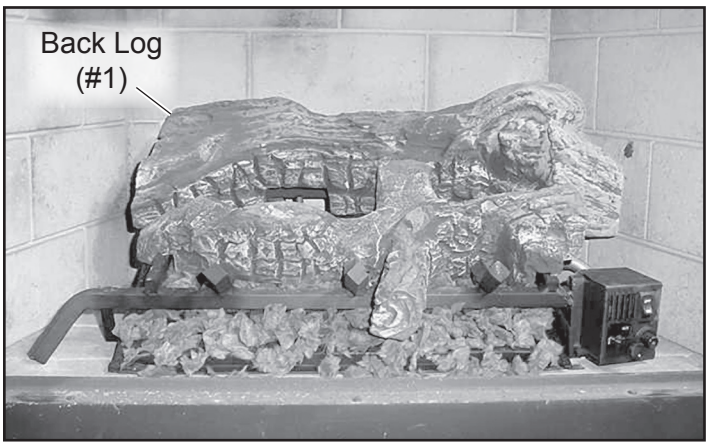

Figure 14 - Placing Back Log (#1)

Figure 15 - Placing Left Top Log (#3)

Figure 16 - Placing Center Log (#4)

DUZY4R LOG INSTALLATION SEQUENCE *(continued)*:

5. Place Left Top Crossover Log (#5) up against Left Top Log. *See Figure 17.*
6. Rest Right Top Log (#6) on Center Crossover Log and front of grate. *See Figure 18.*

FOR VDY30D4R INSTALL ONLY:

7. Place Small Front Log (#7) between Center Crossover Log and Top Left Log. *See Figure 19.*

Figure 17 - Placing Left Top Log (#5)

Figure 18 - Placing Right Top Log (#6)

Figure 19 - Placing Small Front Log (#7) 30" Only

FIREPLACE DRAFT TEST

PLACEMENT OF THE GLOWING EMBERS

Cover the burner pan with glowing embers (rock wool) provided. Tear pieces approximately 1/2" in size (roughly the size of a nickel) and cover the burner evenly.

DO NOT…

1. Pile the rock wool too thickly on pan.
2. Place rock wool higher than the top of the front grate bar.
3. Cover the pilot with rockwool.

PLACEMENT OF DECORATIVE VOLCANIC ROCK

Sprinkle volcanic rock in front of front glowing embers and to both sides. **DO NOT SPRINKLE ON BURNERS, PILOT OR LOGS.**

IMPORTANT: FIREPLACE DRAFT TEST DURING INITIAL INSTALLATION

It is critical to verify that your chimney is drafting properly because the fireplace and gas logs function as a system.

Although Monessen Hearth Systems goes to great lengths to design vented gas log sets that minimize sooting, all vented log sets will soot over time. Sooting normally appears as areas of a black powder-like substance on the logs. It is important to periodically clean and inspect the logs per the cleaning and servicing section of the manual.

WARNING

Fireplace systems that do not draft properly can increase the amount of soot produced by normal operation of the log set and in extreme cases can cause soot to be deposited within the room. This effect can be a sign of a blocked chimney, a faulty vent system or the result of negative pressure within the home. The dealer should be able to diagnose if a problem exists and be able to provide a solution to improve the venting of the fireplace.

FIREPLACE DRAFT TEST METHOD

To determine if your fireplace is drafting properly, turn the log set on. After the log set has been burning for about 10 minutes, place a match or smoke stick along the top and sides of the fireplace opening. If the flame or smoke is not pulled into the fireplace, then the **fireplace is not venting properly.** At this point the damper stop should be adjusted so that the damper opening is increased. If the problem remains after the open area of the damper is increased, then the fireplace system should be professionally inspected to determine if your firebox/chimney is venting properly.

CHECKING BURNER FLAMES

In normal operation at full rate after appoximately 15 minutes, the following flame appearance should be observed.

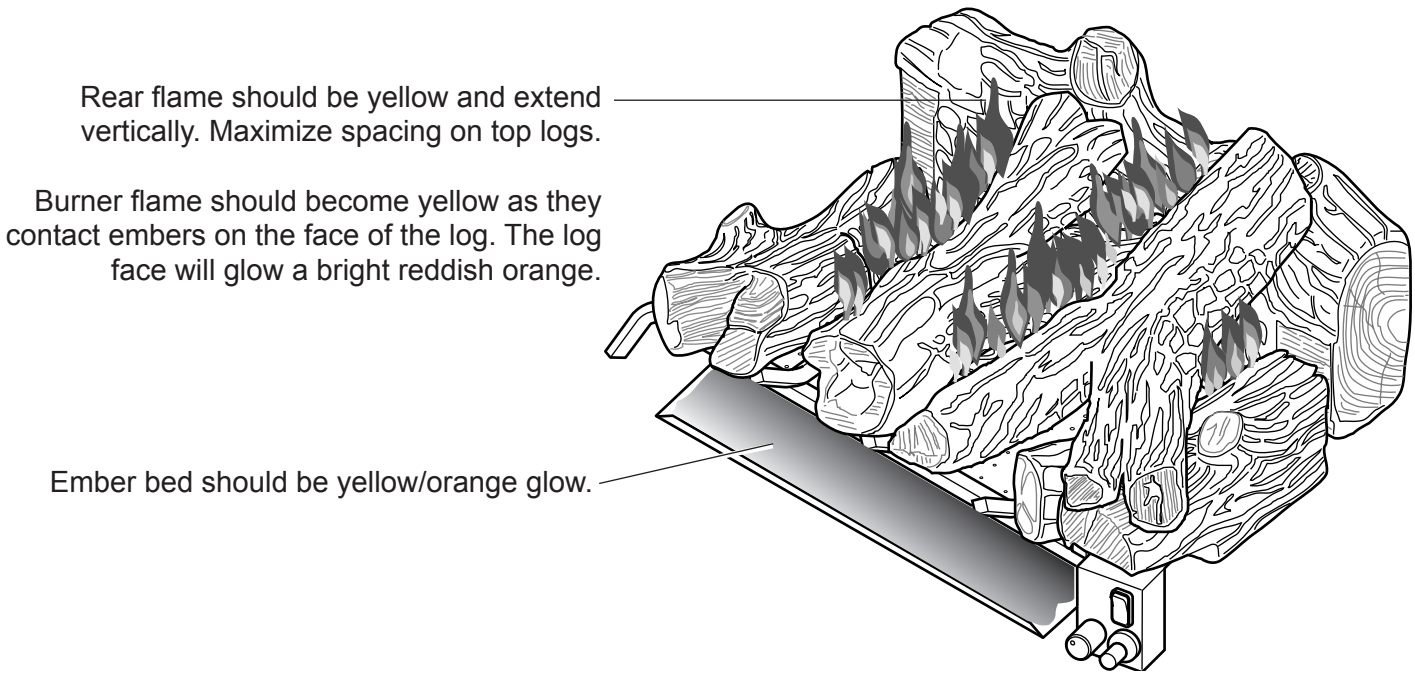

Figure 20 - Proper Flame Height

MANUAL AND MILLIVOLT CONTROL WITH PILOT ONLY

PILOT FLAME APPEARANCE

The pilot flame must always be present when appliance is in operation. It should touch the thermocouple or thermopile body.

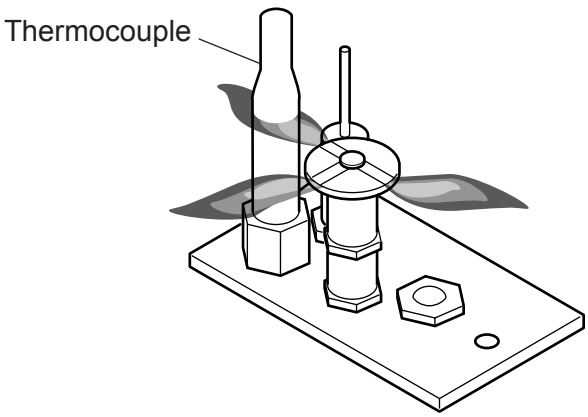

Figure 21 - Manual Control Pilot

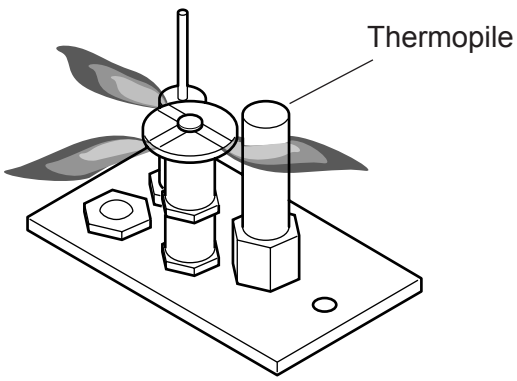

Figure 22 - Milli-volt Control Pilot

INITIAL STARTUP

During manufacturing, fabricating and shipping, various components of this appliance are treated with certain oils, films or bonding agents. These chemicals are not harmful, but may produce annoying smoke and smells as they are burned off during the initial operation of the appliance. The initial break-in operation should last 2-3 hours with the burner at the highest setting. The appliance must not be used with glassed doors in the closed position. This can result reduced combustion and overheating.

OPERATING INSTRUCTIONS

SAFTEY INSTRUCTION FOR MANUAL AND MILLI-VOLT CONTROL WITH PILOT

FOR YOUR SAFETY READ BEFORE LIGHTING

A. This appliance is equipped with an ignition device which automatically lights the pilot.

B. BEFORE OPERATING smell all around the appliance area for gas. Be sure to smell next to the floor because some gas is heavier than air and will settle on the floor.

WARNING

If you do not follow these instruction exactly, a fire or explosion may result causing property damage, personal injury or loss of life.

WHAT TO DO IF YOU SMELL GAS:

- Do not attempt to light any appliance.
- Do not touch any electric switch; do not use any phone in your building.
- Immediately call your gas supplier from a neighbor's phone. Follow the gas supplier's instructions.
- If you cannot reach your gas supplier, call the fire department.

C. Use only your hand to push in, or turn the gas control knob. Never use tools. If the knob will not push in or turn by hand, don't try to repair it. Call a qualified service technician. Force or attempted repair may result in a fire or explosion.

D. Do not use this appliance if any part of it has been under water. Immediately call a qualified service technician to inspect the appliance and to replace any part of the control system and any gas control that has been under water.

MANUAL CONTROL LIGHTING INSTRUCTIONS

1. STOP! Read the safety information label.
2. Make sure the manual shutoff valve fully open.
3. This gas log set is equipped with an ignition device (piezo) which automatically lights the pilot. If piezo ignitor does not light the pilot, refer to instructions for *"Match Lighting Instructions,"* page 19.
4. Push in gas control knob slightly and turn clockwise to "OFF."
   NOTE: Knob cannot be turned to "OFF" unless knob is pushed in slightly.
5. Wait five (5) minutes to clear out any gas. Then smell for gas, including near the floor. If you smell gas, STOP! Follow "B" in the safety information label. If you don't smell gas, go to next step.
6. Find pilot - follow metal tube from gas control.
7. From "OFF" position, push in gas control knob slightly and turn counterclockwise to "PILOT." Push in control knob for 5 seconds.
8. With the control knob pushed in, immediately light the pilot by depressing the piezo and releasing. Continue to hold the control knob in for about one (1) minute after the pilot is lit. Release knob and it will pop back up. Pilot should remain lit. If it goes out, repeat steps 5 through 9.
   - If knob does not pop up when released, stop and immediately call your service technician or gas supplier.
   - If the pilot will not stay lit after several tries, turn the gas control knob to off and call you service technician or gas supplier.
9. Turn gas control knob counterclockwise to "ON."

Figure 23 - Control Knob

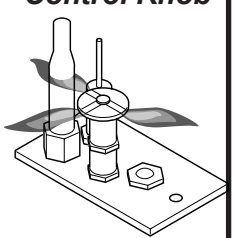

Figure 24 - Manual Pilot

TO TURN OFF GAS TO APPLIANCE

1. Push in gas control knob slightly and turn clockwise to "OFF". Do not force.

MILLI-VOLT CONTROL LIGHTING INSTRUCTIONS

1. STOP! Read the safety information label.
2. Make sure the manual shutoff valve is fully open.
3. This gas log set is equipped with an ignition device (piezo) which automatically lights the pilot. If piezo ignitor does not light the pilot, refer to instructions for "*Match Lighting*."
4. Turn gas control knob clockwise to the "OFF" position, and turn ON/OFF switch to "OFF" position.
5. Wait (5) minutes to clear out any gas. Then smell for gas, including near the floor. If you smell gas, STOP! Follow "B" in the safety information label. If you don't smell gas, go to next step.
6. From "OFF" position, turn the gas control knob counterclockwise to "*Ign*" position. Push in control knob for 5 seconds.
7. With the control knob pushed in, push in and release the piezo ignitor button to light the pilot.
8. Continue pushing the control knob in for a further 60 seconds to prevent the flame detector from shutting off the gas while the probe is warming up. Release the control knob.
9. Turn gas control knob counterclockwise to the "ON" position.
10. After the pilot has been lit for one minute, the burners can be turned on. Turn the ON/OFF switch to "ON" position.
11. If the gas logs will not operate, follow the instructions "*To Turn Off Gas To Appliance,*" page 18 and call your service technician or has supplier.

WARNING **Wait 30 seconds before readjusting the heater when the control knob has been turned down to a lower setting.**

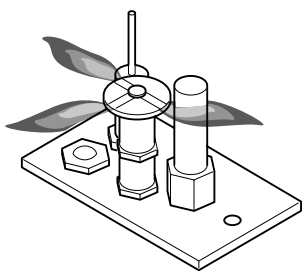

Figure 25 - Milli-Volt Pilot

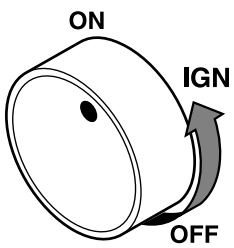

Figure 26 - Control Knob

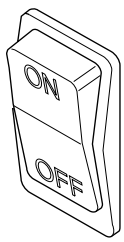

Figure 27 - On/Off Switch

TO TURN OFF GAS TO HEATER

1. Turn control knob clockwise to "OFF" position to completely shut off the heater.
2. If applicable: Turn ON/OFF switch to "OFF" position.
3. If applicable: Turn off all electric power to the heater.

MATCH LIGHTING INSTRUCTIONS

1. Remove any items necessary for easy access to the pilot (for example: logs, screens, etc.).
2. Follow appropriate lighting instructions found previously. Instead of pushing and releasing the piezo button, light a match and hold the flame to the end of the pilot and ignite the pilot.
3. After control knob has been released and pilot stays lit, re-install any items that were removed for pilot access.
4. Call a qualified service technician for repair or replacement of the piezo ignitor.

OPERATING INSTRUCTIONS

SAFTEY INSTRUCTION FOR MANUAL CONTROL WITHOUT PILOT

WARNING

If you do not follow these instruction exactly, a fire or explosion may result causing property damage, personal injury or loss of life.

FOR YOUR SAFETY READ BEFORE LIGHTING

A. BEFORE OPERATING smell all around the appliance area for gas. Be sure to smell next to the floor because some gas is heavier than air and will settle on the floor.

WHAT TO DO IF YOU SMELL GAS:

- Do not attempt to light any appliance.
- Do not touch any electric switch; do not use any phone in your building.
- Immediately call your gas supplier from a neighbor's phone. Follow the gas supplier's instructions.
- If you cannot reach your gas supplier, call the fire department.

B. Use only your hand to push in, or turn the gas control knob. Never use tools. If the knob will not push in or turn by hand, don't try to repair it. Call a qualified service technician. Force or attempted repair may result in a fire or explosion.

C. Do not use this appliance if any part of it has been under water. Immediately call a qualified service technician to inspect the appliance and to replace any part of the control system and any gas control that has been under water.

MANUAL CONTROL LIGHTING INSTRUCTIONS

1. STOP! Read the safety information label.
2. WARNING: BE SURE THE CHIMNEY DAMPER IF FULLY OPEN.
3. Make sure the manual shutoff valve is fully open, and the gas contol valve is fully off.
4. Wait five (5) minutes to clear out any gas. Then smell for gas, including near the floor. If you smell gas, STOP! Follow “B” in the safety information label. If you don't smell gas, go to next step.
5. Place a burning match on the surface of the burner embers (granules). Do not hold the match in hand. Slowly turn the manual valve counterclockwise to “ON”.
6. If the burner does not light before the match goes out, immeadiately turn the manual valve clockwise to “OFF”.

MATCH LIGHTING INSTRUCTIONS

1. Turn the manual valve clockwise to “OFF.”

REMOTE RECEIVER INSTALLATION

DO NOT PLACE THE REMOTE IN THE FIREPLACE IF ANY OF THE FOLLOWING CONDITIONS APPLY.

- The floor of the fireplace is recessed below the fireplace opening. Refer to the *"Warnings"* on page 7.
- The fireplace has a glass doors which when open reduce the fireplace opening width by $1\frac{1}{2}$" or more below the stated minimum dimensions within the homeowner's manual.
- The floor of the fireplace is sheet metal without a brick covering.
- The remote receiver when attached does not physically fit inside the fireplace with 2" clearance to the side wall.

1. Cut wire to length (approximately 5" for placement in the fireplace). Strip back $\frac{1}{4}$" of the insulation from both ends of the wire. Connect two 1/4" spade terminals to one end of the wire. Insert the opposite end of the wire into the receiver wire terminals and tighten the screws. The female terminals should be connected to the factory attached male terminals located on the right hand side of the control cover. *(See Figure 28).* Do not let wire touch grate and/or the burner.

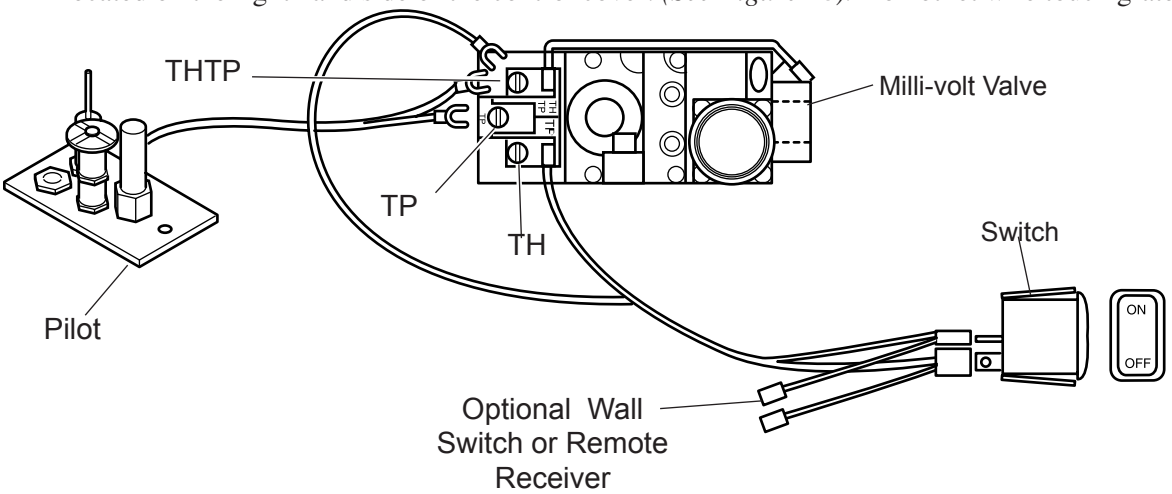

Figure 28 - Millivolt Wiring Diagram

2. Attach Velcro pad to side of remote receiver (opposite battery cover) with self adhesive backing.
3. Attach second Velcro pad to control bracket with self adhesive backing. *(See Figure 29).*
4. Attach remote receiver to control cover.

FAILURE TO FOLLOW THESE INSTRUCTIONS EXACTLY AND/OR TO PLACE THE REMOTE RECEIVER IN ANY LOCATION WITHIN THE FIREPLACE OTHER THAN THE RECOMMENDED LOCATION WILL VOID THE WARRANTY AND COULD CAUSE THE RECEIVER UNIT TO MELT.

NOTE: Battery life decreases as temperature increases. If the remote requires frequent battery changes, this problem can be improved by placing the remote receiver outside of he fireplace in an area with lower temperatures.

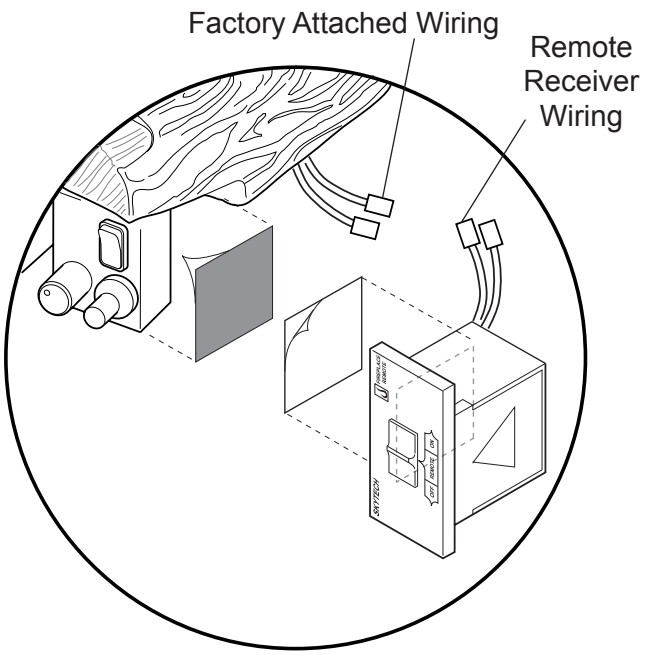

Figure 29 - Placement of Remote Receiver on VDY Log Set

CLEANING AND SERVICING

WARNING

Turn off gas logs and allow to cool before cleaning. Disconnect electrical power if applicable before cleaning or servicing.

Remove logs, handling carefully by holding gently at each end. Gloves are recommended to prevent skin irritation from ceramic fibers. If skin becomes irritated, wash gently with soap and water. Refer to manual for correct log placement.

PERIODIC CLEANING - REFER TO PARTS DIAGRAM FOR LOCATION OF ITEMS DISCUSSED BELOW.

- Do not use cleaning fluid to clean logs or any part of gas logs.
- Logs - brush with soft bristle brush or vacuum with brush attachment.
- Vacuum loose particles and dust from the control and grate weldment.
- Inspect and clean burner air intake holes. Remove lint or particles with vacuum or brush. Failure to keep air intake holes clean will result in sooting and poor combustion.
- If embers (rockwool) have turned a rust color and become brittle, remove old embers (rockwool) from log set. Replace with new rockwool. Rockwool can be purchased from your local dealer. See log placement section for placement of embers.

ANNUAL CLEANING/INSPECTION - REFER TO PARTS DIAGRAM FOR LOCATION OF ITEMS DISCUSSED BELOW.

- Inspect and clean all burner ports.
- Verify burner and pilot flame pattern and log placement for proper operation.
- Verify smooth and responsive ignition of burner.
- Inspect and clean chimney.
- Inspect and clean burner air intake holes. Remove lint or particles with vacuum or brush. Failure to keep air intake holes clean will result in sooting and poor combustion.

24/18 Model

Item	Description	VDY24/18 NMP	VDY24/18 PMP	VDY24/18 NVP	VDY24/18 PVP	VDY24/18 NM
1	Main Injector	32D0100	32D0100	32D0100	32D0100	32D0100
2	Manual Control Valve without Pilot	N/A	N/A	N/A	N/A	27D0303
3	Manual Control Valve with Pilot	27D0304	27D0304	N/A	N/A	N/A
4	Millivolt Control Valve with Pilot	N/A	N/A	32D0211	27D3300	N/A
5	Regulator	24D0305	24D0306	N/A	N/A	24D0305
6	Pilot	26D0500	26D0501	26D0500	26D0501	
7	Thermocouple/ Thermopile	28D0400	28D0400	26D0566	26D0566	N/A
8	Control Knob	27D0602	27D0602	18D0603	18D0603	27D0417
9	Home Owners Manual	32D1999	32D1999	32D1999	32D1999	32D1999

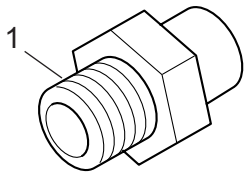

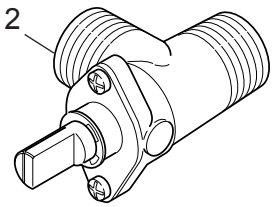

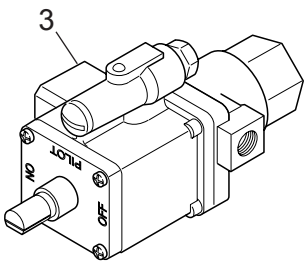

30 Model

Item	Description	VDY30 NMP	VDY30 PMP	VDY30 NVP	VDY30 PVP	VDY30 NM
1	Main Injector	32D0090	32D0111	32D0090	32D0111	32D0090
2	Manual Control Valve without Pilot	N/A	N/A	N/A	N/A	27D0303
3	Manual Control Valve with Pilot	27D0304	27D0304	N/A	N/A	N/A
4	Millivolt Control Valve with Pilot	N/A	N/A	32D0211	27D3300	N/A
5	Regulator	24D0305	24D0306	N/A	N/A	24D0305
6	Pilot	26D0500	26D0501	26D0500	26D0501	
7	Thermocouple/ Thermopile	28D0400	28D0400	26D0566	26D0566	N/A
8	Control Knob	27D0602	27D0602	18D0603	18D0603	27D0417
9	Home Owners Manual	32D1999	32D1999	32D1999	32D1999	32D1999

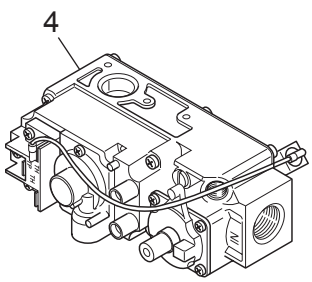

ACCESORIES		
Flex Conector	Flexcon30	All Models
Wall Kit Switch (w/20' wire)	MVWS	Milli-volt only
On/Off Hand Held Remote with LCD	RCM	Milli-volt only
On/Off Hand Held Remote	RCB	Milli-volt only
Remote Receiver Cover - Embers	RRCE	Milli-volt only
Remote Receiver Cover - Metal	RRCM	Milli-volt only
Volcanic Rock	VR1000A	All Models
Decorative Ceramic Fiber Embers	EMBERS	All Models
Ceramic Fiber Cinders	CINDERS	All Models
Rock Wool	DV-RWA	All Models

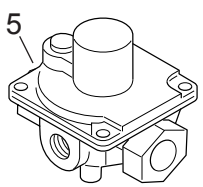

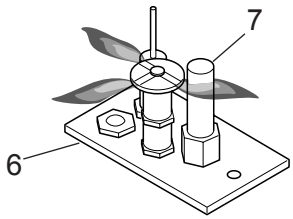

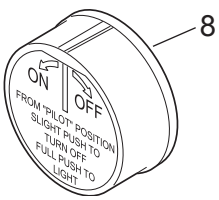

9

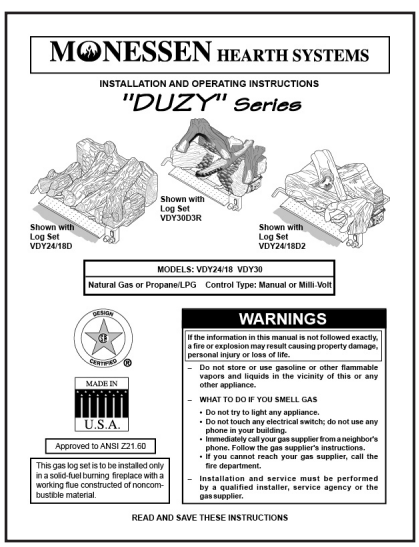
MONESSEN HEARTH SYSTEMS

INSTALLATION AND OPERATING INSTRUCTIONS

"DUZY" Series

Shown with Log Set VDY24/18D

Shown with Log Set VDY30D3R

Shown with Log Set VDY24/18D2

MODELS: VDY24/18 VDY30

Natural Gas or Propane/LPG Control Type: Manual or Milli-Volt

WARNINGS

If the information in this manual is not followed exactly, a fire or explosion may result causing property damage, personal injury or loss of life.

– Do not store or use gasoline or other flammable vapors and liquids in the vicinity of this or any other appliance.

– WHAT TO DO IF YOU SMELL GAS

• Do not try to light any appliance.
• Do not touch any electrical switch; do not use any phone in your building.
• Immediately call your gas supplier from a neighbor's phone. Follow the gas supplier's instructions.
• If you cannot reach your gas supplier, call the fire department.

– Installation and service must be performed by a qualified installer, service agency or the gas supplier.

MADE IN U.S.A.

Approved to ANSI Z21.60

This gas log set is to be installed only in a solid-fuel burning fireplace with a working flue constructed of noncombustible material.

READ AND SAVE THESE INSTRUCTIONS

ILLUSTRATED PARTS LIST

DUZY (I) LOGS SERIES

Item	Description	Qty.	VDY24/18D	VDY30D
1	Rear Log	1	32D0037	32D0049
2	Right Log	1	32D0038	32D0050
3	Left Log	1	32D0039	32D0051
4	Top Right Log	1	32D0040	32D0052
5	Top Left Log	1	32D0041	32D0053
6	Top Center/Right Center Log	1	N/A	32D0054
7	Top Left Center Log	1	N/A	32D0055

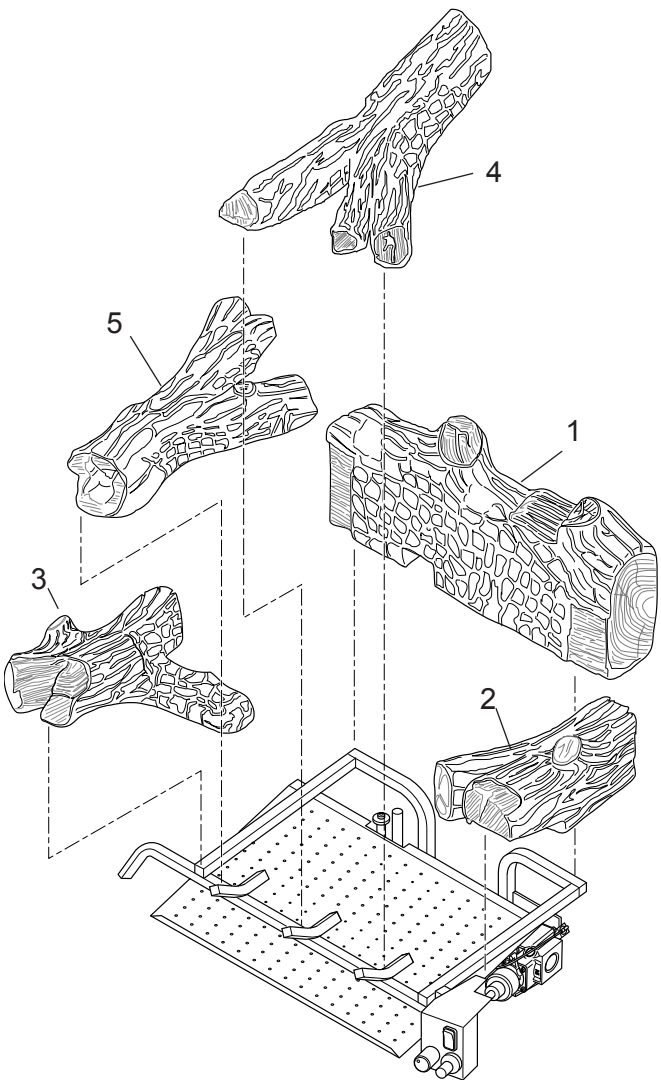

Duzy 24/18 Log Set

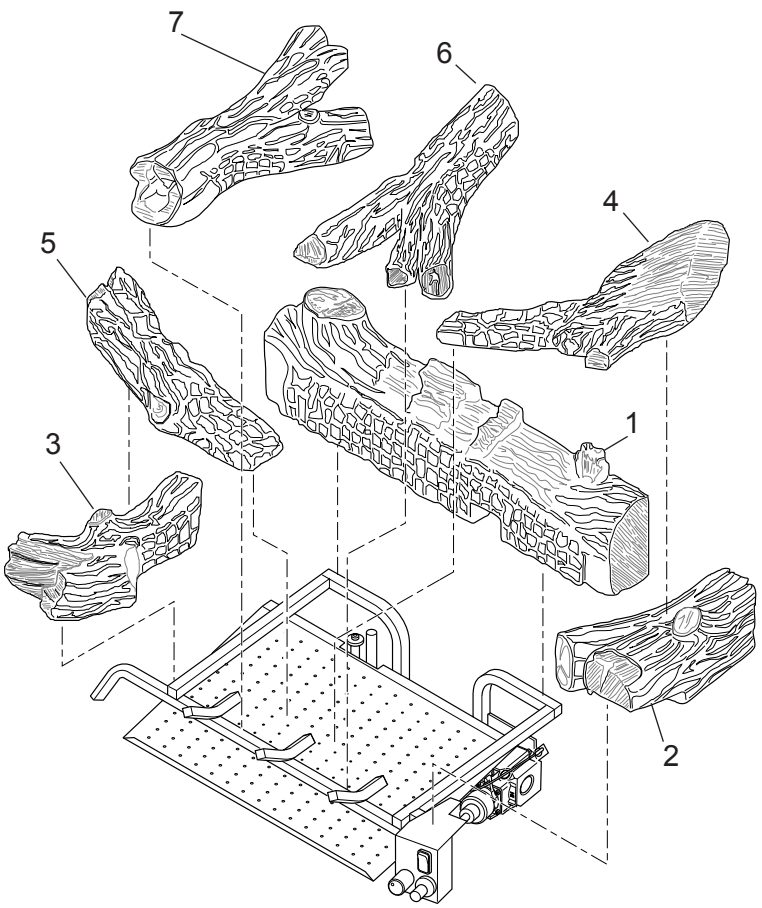

Duzy 30" Log Set

DUZY (II) LOGS SERIES

Item	Description	Qty.	VDY24/18D2	VDY30D2
1	Rear Log	1	32D0400	32D0410
2	Right Log	1	32D0401	32D0411
3	Left Log	1	32D0402	32D0412
4	Top Log	1	32D0403	32D0413

Item	Description	Qty	VDY24/18D3R	VDY30D3R
1	Rear Log	1	32D2118	32D2124
2	Front Left Log	1	32D2117	32D2123
3	Front Right Log	1	32D2116	32D2122
4	Top Middle Log	1	32D2114	32D2120
5	Top Right Log	1	32D2113	32D2119
6	Top Left Log	1	32D2115	32D2121

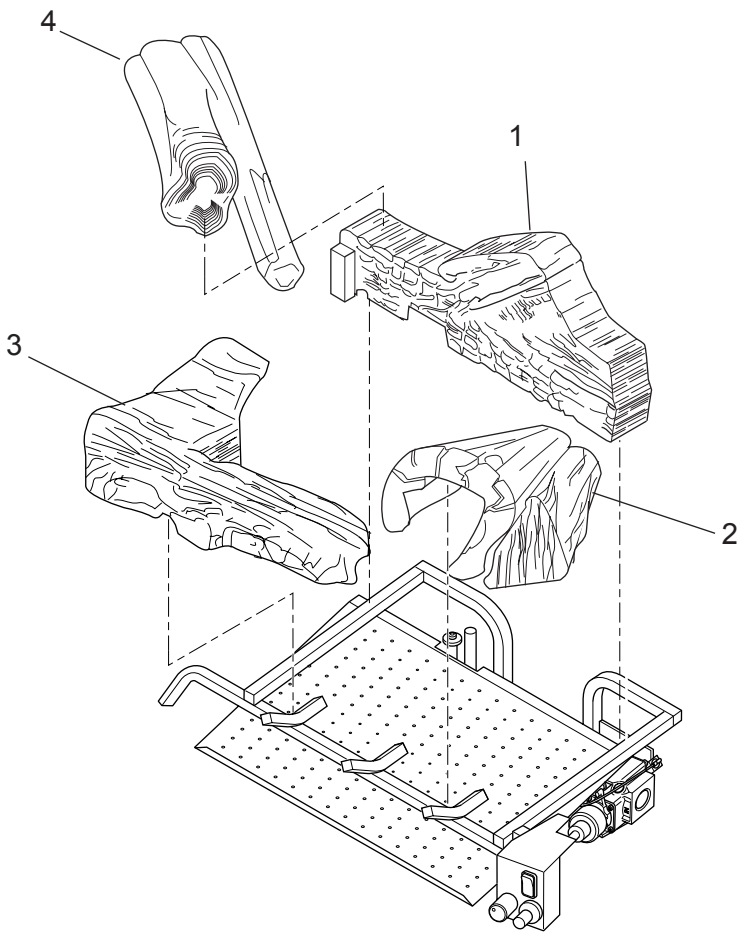

Duzy VDYD2 Log Set

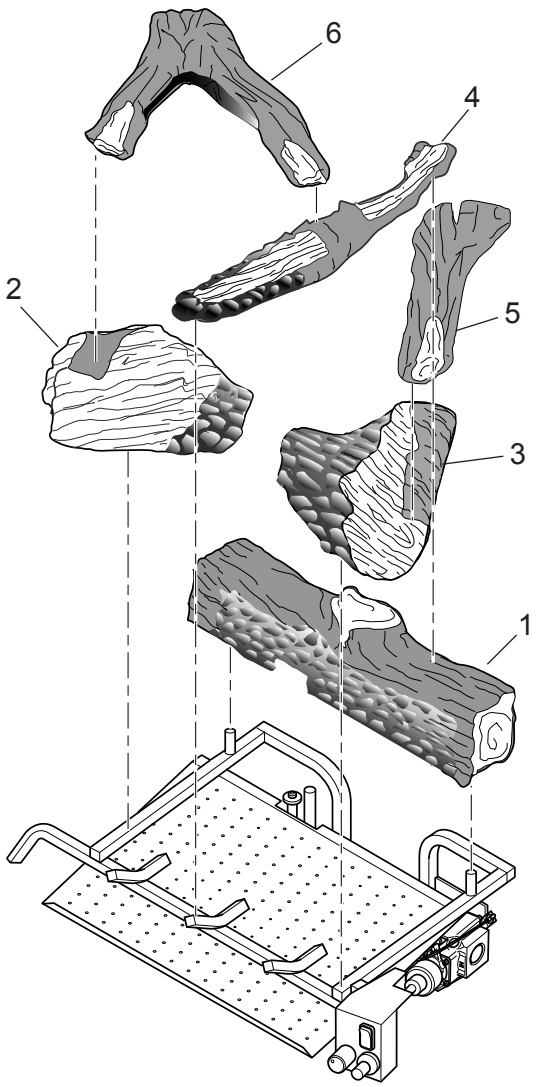

Duzy VDYD3 Log Set

ILLUSTRATED PARTS LIST

Item	Description	Qty	VDY24/18D4	VDY30D4R
1	Back Log	1	32D3101	32D3111
2	Bottom Front Log	1	32D3102	32D3112
3	Top Left Log	1	32D3103	32D3113
4	Center Crossover Log	1	32D3104	32D3114
5	Left Top Crossover Log	1	32D3105	32D3115
6	Right Top Log	1	32D3106	32D3116
7	Small Front Log	1	—	32D3117

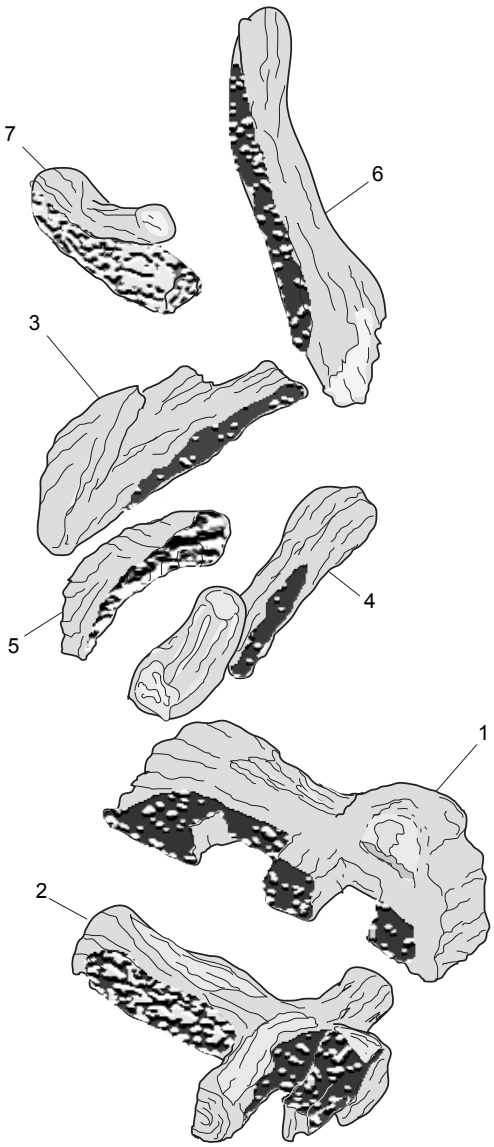

WARNING

Turn appliance OFF and allow to cool before servicing. Only a qualified service person should service and repair the heater.

Note: All troubleshooting items are listed in order of operation.

OBSERVED PROBLEM	POSSIBLE CAUSE	REMEDY
When ignitor button is pressed, there is no spark at pilot.	1. Ignitor electrode positioned wrong. 2. Ignitor electrode is broken. 3. Ignitor electrode not connected to ignitor cable. 4. Ignitor cable pinched or wet. Keep ignitor cable dry. 5. Broken ignitor cable. 6. Bad piezo ignitor.	1 Replace ignitor. 2. Replace ignitor. 3. Reconnect ignitor cable. 4. Free ignitor cable if pinched by any metal or tubing. 5. Replace ignitor cable. 6. Replace piezo ignitor.
Appliance produces unwanted odors.	1. Appliance burning vapors from paint, hair spray, glues, etc. 2. Gas leak. 3. Fireplace Spilling	1. Ventilate room. Stop using odor causing products while heater is running. 2. Locate and correct all leaks. 3. Check fireplace, adjust damper position to eliminate spillage (backdraft)
Appliance shuts off during use.	1. Low line pressure. 2. Pilot is partially clogged. 3. Defective Thermopile	1. Contact local gas company. 2. Clean pilot. 3. Check pilot flame, check wire connections, check output, should be 325 millivolts across TH/TP and TP Terminals with ON/OFF switches off.
Gas odor even when control knob is in OFF position.	1. Gas leak. 2. Control valve defective.	1. Locate and correct all leaks. 2. Replace control valve.
When ignitor button is pressed, there is spark at pilot, but no ignition.	1. Gas supply turned off or manual shutoff valve closed. 2. Control knob not in PILOT position. 3. Control knob not pressed in while in PILOT position. 4. Air in gas lines when installed. 5. Pilot is clogged. 6. Gas regulator setting is not correct.	1. Turn on gas supply or open manual shutoff valve. 2. Turn control knob to PILOT position. 3. Press in control knob while in PILOT position. 4. Continue holding down control knob. Repeat igniting operation until air is removed. 5. Replace pilot assembly or get it serviced. 6. Replace gas regulator
Pilot lights, but flame goes out when control knob is released.	1. Control knob not fully pressed in. 2. Control knob not pressed in long enough. 3. Manual shutoff valve not fully open.	1. Press in control knob fully. 2. After pilot lights, keep control knob pressed in for 30 seconds. 3. Fully open manual shutoff valve.

TROUBLESHOOTING

OBSERVED PROBLEM	POSSIBLE CAUSE	REMEDY
	4. Thermocouple connection loose at control valve. 5. Pilot flame not touching thermocouple, which allows thermocouple to cool, causing pilot flame to go out. This problem could be caused by either low gas pressure, or a dirty or partially clogged pilot. 6. Thermocouple damaged. 7. Control valve damaged.	4. Hand tighten until snug, then tighten 1/4 turn more. 5. Contact local gas company. 6. Replace thermocouple. 7. Replace control valve.
One or both burners do not light after pilot is lit.	1. Burner orifice is clogged. 2. Burner orifice diameter is too small. 3. Inlet gas pressure is too low.	1. Clean burner or replace burner orifice. 2. Replace burner orifice. 3. Contact qualified service person.
Burner backfires during combustion.	1. Manifold pressure is too low. 2. Burner orifice is clogged.	1. Contact local gas company. 2. Clean burner or replace burner orifice.
Slight smoke or odor during initial operation.	1. Burner orifice is clogged or damaged. 2. Burner is damaged. 3. Gas regulator defective.	1. Clean burner or replace burner orifice. 2. Replace burner. 3. Replace gas regulator.
Logs appear to smoke after initial operation.	1. Vapors from paint or curing process of logs.	1. Problem will stop after a few hours of operation. 1. Log is intended to be smokeless. Turn OFF heater and call qualified service person.
Heater produces a whistling noise when burner is lit.	1. Turning control knob to HIGH position when burner is cold. 2. Air in gas line. 3. Dirty or partially clogged burners orifice.	1. Turn control knob to ON position and let warm up for a minute. 2. Operate burner until air is removed from line. Have gas line checked by local gas company. 3. Clean burner or replace burner orifice.
No gas to pilot.	1. LP-regulator shut down due to inlet pressure too high.	1. Verify LP tank regulator is installed and set at 11" to 13" w.c. 2. Replace regulator on heater.

WARNING

If the gas quality is bad, your pilot may not stay lit, the burners may produce soot and the heater may backfire when lit. If the gas quality or pressure is low, contact your local gas supplier immediately.

NOTES

NOTES

LIMITED LIFETIME WARRANTY POLICY

LIFETIME WARRANTY

The following components are warranted for life to the original owner, subject to proof of purchase: Firebox, Combustion Chamber, Heat Exchanger, Grate and Stainless Steel Burners.

FIVE YEAR WARRANTY

The following components are warranted for 5 years to the original owner, subject of proof of purchase: Ceramic Fiber Logs, Catalytic Filter and Aluminized Burners.

BASIC WARRANTY

Monessen Hearth Systems (MHS) warrants the components and materials in your gas appliance to be free from manufacturing and material defects for a period of two years from date of installation. After installation, if any of the components manufactured by MHS in the appliance are found to be defective in materials or workmanship, MHS will, at its option, replace or repair the defective components at no charge to the original owner. MHS will also pay for reasonable labor costs incurred in replacing or repairing such components for a period of two years from the date of installation. Any products presented for warranty repair must be accompanied by a dated proof of purchase.

This Limited Warranty will be void if the appliance is not installed by a qualified installer in accordance with the installation instructions. The Limited Lifetime Warranty will also be void if the appliance is not operated and maintained according to the operating instructions supplied with the appliance, and does not extend to (1) firebox/burner assembly damage by accident, neglect, misuse, abuse, alteration, negligence of others, including the installation thereof by unqualified installers, (2) the costs of removal, reinstallation or transportation of defective parts on the appliance, or (3) incidental or consequential damage. All service work must be performed by an authorized service representative.

This warranty is expressly in lieu of other warranties, express or implied, including the warranty of mechantability of fitness for purpose and of all other obligations or liabilities. Monessen Hearth Systems, Inc. does not assume for it any other obligations or liability in connection with the sale or use of the appliance. In states that do not allow limitations on how long an implied warranty lasts, or do not allow exclusion of indirect damages, those limitations of exclusions may not apply to you. You may also have additional rights not covered in this Limited Warranty.

MHS reserves the right to investigate any and all claims against the Limited Warranty and decide upon method of settlement.

For information about this warranty, contact:

Technical Services
Monessen Hearth Systems
149 Cleveland Drive
Paris, Kentucky 40361