This Owner's Manual is provided and hosted by Appliance Factory Parts.

Appliance Factory Parts
Experts in BBQ, Humidifier, & Appliance Parts
1-800-955-7075

EMPIRE VFP24FP22LN-1 Owner's Manual

Shop genuine replacement parts for EMPIRE VFP24FP22LN-1

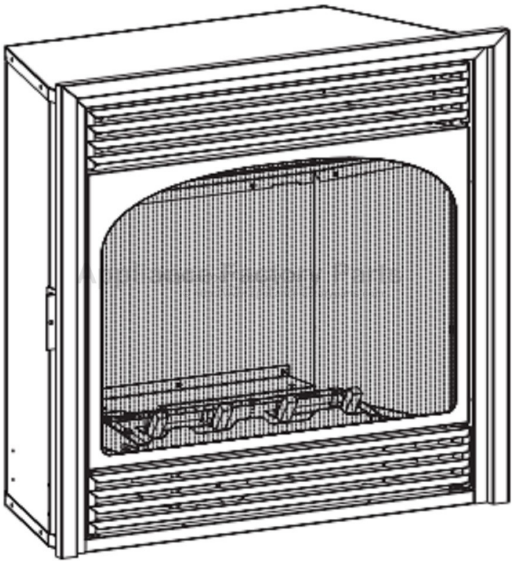

Find Your EMPIRE Fireplace Parts - Select From 642 Models

-------- Manual continues below --------

INSTALLATION INSTRUCTIONS AND OWNER'S MANUAL

The Vail Vent-Free Gas Fireplaces

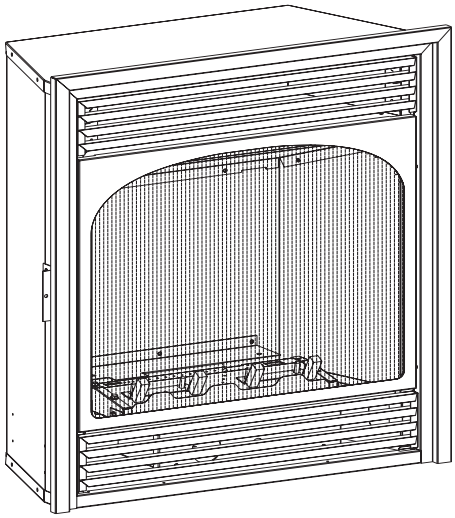

UNVENTED GAS FIREPLACE

HYDRAULIC THERMOSTAT MODELS:

VFP24FP2(0,1,2,3)L(N,P)-1

MILLIVOLT MODELS:

VFP24FP3(0,1,2,3)L(N,P)-1
VFP24FP3(0,1,2,3)L10(N,P)-1 (10,000 BTU UNIT)

INTERMITTENT PILOT MODELS:

VFP24FP7(0,1,2,3)L(N,P)-1
VFP24FP7(0,1,2,3)L10(N,P)-1 (10,000 BTU UNIT)

INSTALLER:

Leave this manual with the appliance.

CONSUMER:

Retain this manual for future reference.

⚠ WARNING

FIRE OR EXPLOSION HAZARD
Failure to follow safety warnings exactly could result in serious injury, death or property damage.

- **Do not store or use gasoline or other flammable vapors and liquids in the vicinity of this or any other appliance.**
- **WHAT TO DO IF YOU SMELL GAS**
  - **Do not try to light any appliance.**
  - **Do not touch any electrical switch; do not use any phone in your building.**
  - **Leave the building immediately.**
  - **Immediately call your gas supplier from a neighbor's phone. Follow the gas supplier's instructions.**
  - **If you cannot reach your gas supplier, call the fire department.**
- **Installation and service must be performed by a qualified installer, service agency or the gas supplier.**

⚠ WARNING

If not installed, operated and maintained in accordance with the manufacturer's instructions, this product could expose you to substances in fuel or from fuel combustion which can cause death or serious illness.

This is an unvented gas-fired heater. It uses air (oxygen) from the room in which it is installed. Provisions for adequate combustion and ventilation air must be provided. Refer to page 7.

WATER VAPOR: A BY-PRODUCT OF UNVENTED ROOM HEATERS
Water vapor is a by-product of gas combustion. An unvented room heater produces approximately one (1) ounce (30ml) of water for every 1,000 BTU's (.3KW's) of gas input per hour. Refer to pages 7 and 8.

NATIONAL FIREPLACE INSTITUTE® NFI CERTIFIED www.nficertified.org

We suggest that our gas hearth products be installed and serviced by professionals who are certified in the U.S. by the National Fireplace Institute® (NFI) as NFI Gas Specialists.

TABLE OF CONTENTS

SECTION	PAGE
IMPORTANT SOOT PREVENTION STEPS	3
PRODUCT SPECIFICATIONS	4
FIREPLACE DIMENSIONS	5
CLEARANCES	6
COMBUSTIBLE MATERIAL	6
SPECIFICATIONS	7
WATER VAPOR: A BY-PRODUCT OF UNVENTED ROOM HEATERS	7
PROVISIONS FOR ADEQUATE COMBUSTION & VENTILATION AIR	7-8
INTRODUCTION	9
GAS SUPPLY	10
INSTALLATION OF FIREPLACE INTO MANTEL	11
BUILT-IN FIREPLACE INSTALLATION	12
VFP24 LOG IDENTIFICATION	13
LOG PLACEMENT	14-18
PLACEMENT OF GLOWING EMBERS (ROCK WOOL)	19
OPERATION INSTRUCTIONS/FLAME APPEARANCE	19
PILOT FLAME CHARACTERISTICS	20
HYDRAULIC THERMOSTAT MODELS LIGHTING INSTRUCTIONS	21
10,000 BTU MILLIVOLT CONTROL VALVE LIGHTING INSTRUCTIONS	22
MILLIVOLT CONTROL LIGHTING INSTRUCTIONS	23
MILLIVOLT WIRING	24
MILLIVOLT TROUBLESHOOTING SYMPTOMS, POSSIBLE CAUSES AND CORRECTIONS	25
INTERMITTENT PILOT LIGHTING INSTRUCTIONS	26
INTERMITTENT CONTROL SYSTEM OPERATING INSTRUCTIONS	27
INTERMITTENT CONTROL SYSTEM WIRING DIAGRAM	28
INTERMITTENT CONTROL SYSTEM TROUBLESHOOTING	29
TROUBLESHOOTING	30-31
PARTS LIST	32-33
PARTS VIEW	34
MAINTENANCE AND SERVICE	35
IMPORTANT SAFETY INFORMATION	36
SAFETY INFORMATION FOR USERS OF PROPANE GAS	37
MASTER PARTS DISTRIBUTOR LIST	38
HOW TO ORDER REPAIR PARTS	38
WARRANTY	39

IMPORTANT SOOT PREVENTION STEPS

⚠ NOTICE IMPORTANT NOTICE ⚠

INSTALLER - SERVICE PERSON - HOMEOWNER

SOOT MAY BE CREATED IF THE FOLLOWING DIRECTIONS ARE NOT FOLLOWED.

1. Ensure the air shutter is set to the specification. **See Figures 1 and 3** and the table on page 4.
2. Ensure burner, venturi, and air shutter are free of dirt, lint animal hair (i.e. cat and dog) or anything that may block the needed air flow. See Cleaning and Servicing, page 18.
3. ⚠**WARNING:** Do not allow fans to blow directly into the fireplace. Avoid any drafts that alter burner flame patterns. Pay particular attention to ceiling fans and exhaust fans.
4. Do not place trash, logs or other articles on the log set during operation.
5. Avoid the use of scented air fresheners while the log set is in operation. A residue can be produced which may produce soot.
6. Avoid the use of decorative or scented candles while the log set is in operation. Soot may be produced from the by-products of a burning candle. Some candles also produce soot.
7. Do not place lava rocks on burner or burner ports. The lava rocks should only be placed on the fireplace floor.
8. Do not place rock wool (embers) over the large ports of the burner.
9. Check level of ceramic media in burner, if the burner has ceramic media. Burner should be full, up to the level of the openings in the burner top.
10. Annual inspection and cleaning by your dealer or qualified service technician is recommended to prevent malfunction and/or sooting.
11. Install logs according to the installation instructions. Do not alter log placement from the prescribed layout in this manual.
12. Verify the venturi tube is not bent or distorted, The main burner orifice must be centered in the venturi tube for proper combustion and to prevent sooting.

Verify the air shutter for the correct setting. Refer to the tables for specific air shutter settings for each model.

Natural Gas Models - The air shutter setting must be 1/16". **See Figures 1 and 2** and Table 1 on page 4.

NOTICE: Orifice shield removed for photo clarity.
Figure 1 - 1/16" Opening Shown

Test 1/16" air shutter setting with a round object like a drill bit. The object should barely slide between the opening. **See Figure 2.**

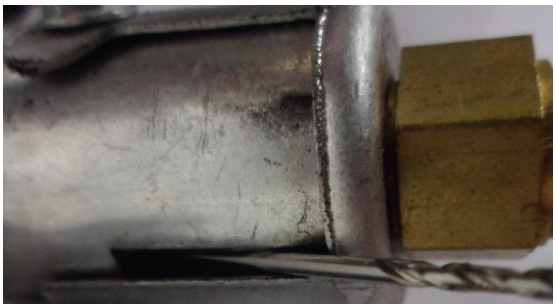

Figure 2 - 1/16" Opening Shown

Propane Gas Model - The air shutter setting must be "fully open." **See Figure 3** and table on page 4. The air shutter setting must be set to the maximum opening.

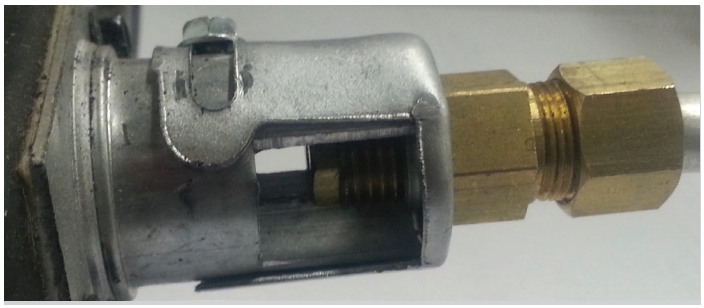

NOTICE: Orifice shield removed for photo quality.
Figure 3 - Air Shutter Fully Open

PRODUCT SPECIFICATIONS

	NATURAL GAS			PROPANE GAS		
	Hydraulic	Millivolt	IP	Hydraulic	Millivolt	IP
Regulator Pressure Setting	6.0	3.5	3.5	10.0	10.0	10.0
Gas Inlet Pressure - Maximum	10.5	10.5	10.5	13.0	13.0	13.0
Gas Inlet Pressure - Minimum	7.0	5.0	5.0	11.0	11.0	11.0

MODEL	GAS	VALVE TYPE	ORIFICE	BTUH MAX. RATE	BTUH MIN. RATE
VFP24FP2(0,1,2,3)LN	N	Hydraulic	#49	20,000	10,000
VFP24FP2(0,1,2,3)LP	P	Hydraulic	#55	20,000	10,000
VFP24FP3(0,1,2,3)LN	N	Millivolt	#43	20,000	14,000
VFP24FP3(0,1,2,3)LP	P	Millivolt	#55	20,000	14,000
VFP24FP3(0,1,2,3)L10N	N	Millivolt	#53	10,000	10,000
VFP24FP3(0,1,2,3)L10P	P	Millivolt	#64	10,000	10,000
VFP24FP7(0,1,2,3)LN	N	IP	#43	20,000	14,000
VFP24FP7(0,1,2,3)L,P	P	IP	#55	20,000	14,000
VFP24FP7(0,1,2,3)L10N	N	IP	#53	10,000	10,000
VFP24FP7(0,1,2,3)L10P	P	IP	#64	10,000	10,000

TABLE 1 - AIR SHUTTER OPENING	
Model	Air Shutter Opening
VFP24FP2(0,1,2,3)LN	1/16
VFP24FP3(0,1,2,3)LN	1/16
VFP24FP3(0,1,2,3)L10N	1/16
VFP24FP7(0,1,2,3)L,N	1/16
VFP24FP7(0,1,2,3)L10N	1/16

TABLE 2 - AIR SHUTTER OPENING - PROPANE GAS MODELS	
Model	Air Shutter Opening
VFP24FP2(0,1,2,3)LP	Fully Open
VFP24FP3(0,1,2,3)LP	Fully Open
VFP24FP3(0,1,2,3)L10P	Fully Open
VFP24FP7(0,1,2,3)LP	Fully Open
VFP24FP7(0,1,2,3)L10P	Fully Open

ACCESSORIES	
FBB6	Automatic Blower
VPP1A-22	Aged Brick Liner
VFF24HP-1	Hammered Pewter Trim Kit
ACCESSORIES FOR MILLIVOLT AND INTERMITTENT MODELS ONLY	
FRBC	Battery Operated Remote Control
FRBTC	Battery Operated Remote Control w/Thermostat
FREC	Electric Remote Control
FWS	Wall Switch
TMV	Wall Thermostat Millivolt - Reed Switch
TRW	Wireless Remote Wall Thermostat

FIREPLACE DIMENSIONS

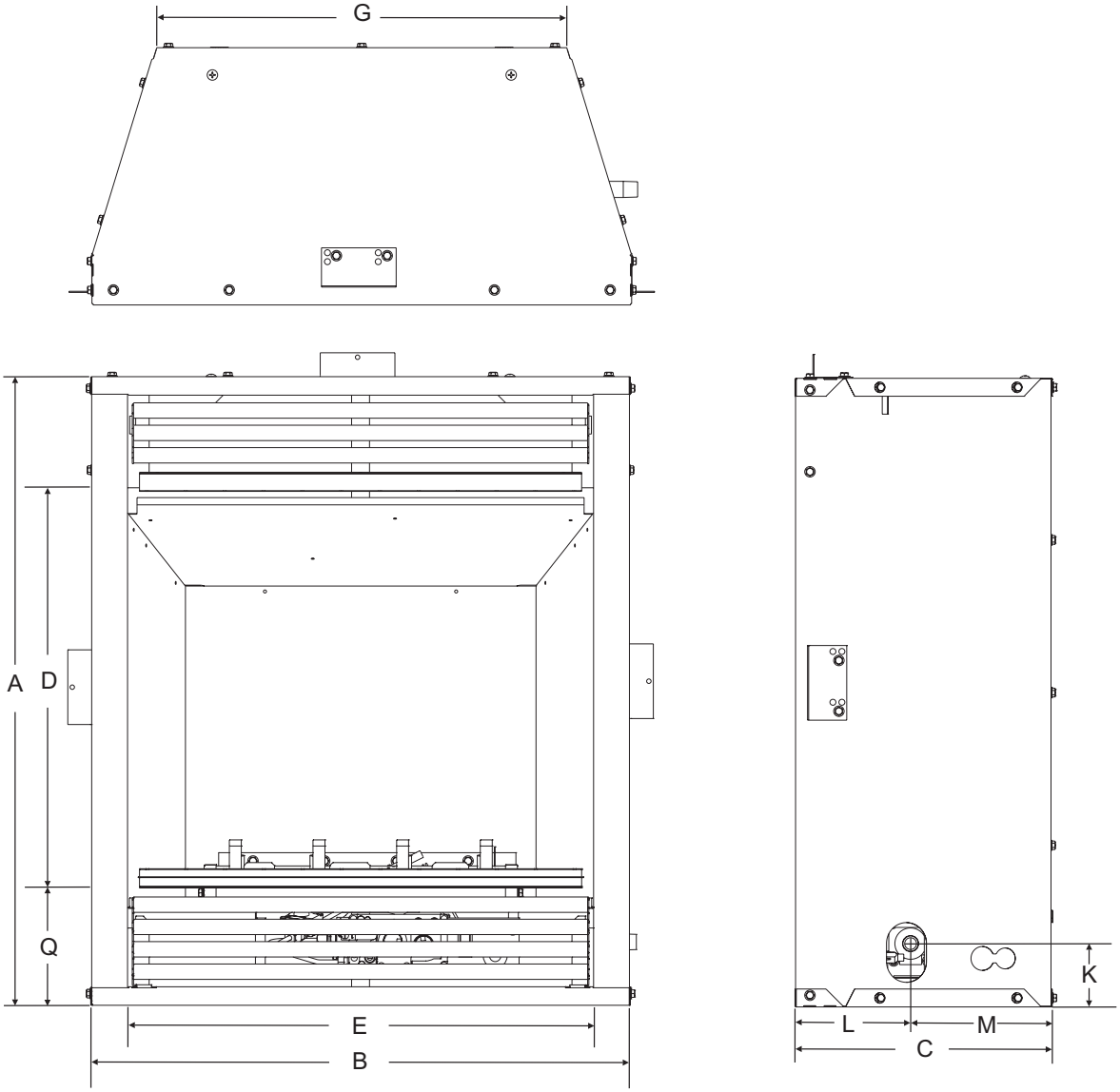

INDEX LETTER	DIMENSION DESCRIPTION	VFP24
		Dimensions in Inches
A	The maximum height of firebox face (excluding standoffs)	26-1/2
B	The maximum width of the firebox face (excluding nailing flanges)	23
C	The maximum depth of the firebox	11
D	The height of the firebox opening	17-1/2
E	The width of the firebox opening	19-1/2
F	The interior depth of the firebox (not shown)	9-3/8
G	The rear exterior width of the firebox (not shown)	17-1/4
K	Height from the bottom of the box to the gas line opening	2-5/8
L	Depth from the front of the box to gas line opening	4-13/16
M	Depth from rear of box to gas line opening	6-1/8
Q	Distance from floor to fireplace opening	4-7/8

N/A - Not applicable for this unit.

CLEARANCES

Minimum Wall and Ceiling Clearances

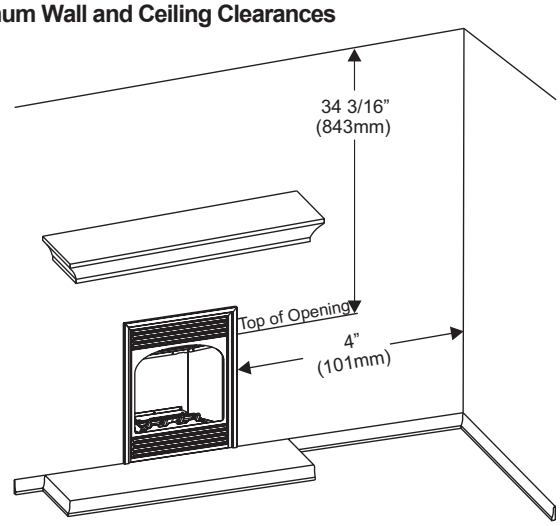

Figure 4

This fireplace can be installed with zero clearance to combustible material.

When facing the front of the appliance the minimum clearances to combustible construction (material) are the following:

1. Clearances from the right side or left side of the fireplace opening to any combustible wall or material should not be less than 4 inches.
2. Clearances from the top of the fireplace opening to the ceiling should not be less than 34-3/16 inches.

Mantel Clearances for Built-in Installation

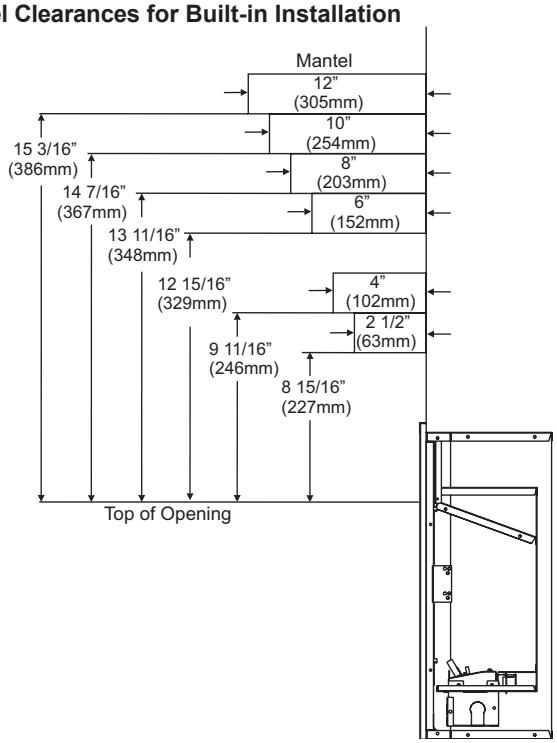

Figure 5

COMBUSTIBLE MATERIAL

Do not attach combustible material to the mantel of your fireplace. This is a fire hazard.

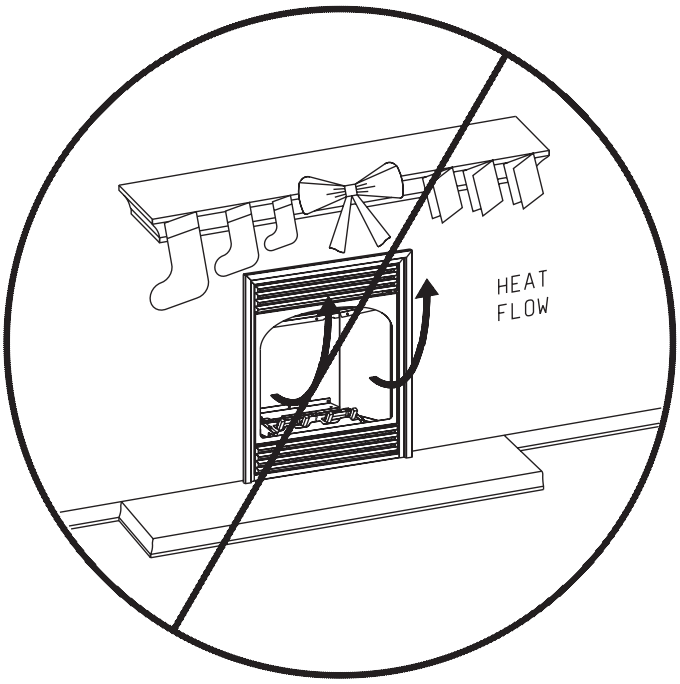

Figure 6

No greeting cards, stockings or ornamentation of any type should be placed on or attached to the fireplace. This is a heating appliance. The flow of heat can ignite combustibles.

SPECIFICATIONS

MODEL	VFP24FP3*L VFP24FP7*L		VFP24FP2*L		VFP24FP3*L10		VFP24FP7*L10	
	Natural	Propane	Natural	Propane	Natural	Propane	Natural	Propane
Input Max.	20,000		20,000		10,000		10,000	
Input Min.	14,000		10,000		10,000		10,000	
Orifice Size	#43	#55	#49	#55	#53	#64	#53	#64
Air Shutter Opening	1/16	FULLY OPEN	1/16	FULLY OPEN	1/16	FULLY OPEN	1/16	FULLY OPEN

* Indicates optional accessories that may be installed.

ACCESSORIES	
FBB6	Automatic Blower
VPP1A-22	Aged Brick Liner
VFF24HP-1	Hammered Pewter Trim Kit
ACCESSORIES FOR MILLIVOLT AND INTERMITTENT MODELS ONLY	
FRBC	Battery Operated Remote Control
FRBTC	Battery Operated Remote Control w/Thermostat
FREC	Electric Remote Control
FWS	Wall Switch
TMV	Wall Thermostat, Millivolt - Reed Switch
TRW	Wireless Remote Wall Thermostat

WATER VAPOR: A BY-PRODUCT OF UNVENTED ROOM HEATERS

Water vapor is a by-product of gas combustion. An unvented room heater produces approximately one ounce (30ml) of water for every 1,000 BTU's (.3KW's) of gas input per hour. .

Unvented room heaters are recommended as supplemental heat (a room) rather than a primary heat source (an entire house). In most supplemental heat applications, the water vapor does not create a problem. In most applications, the water vapor enhances the low humidity atmosphere experienced during cold weather.

The following steps will help insure that water vapor does not become a problem.

1. Be sure the heater is sized properly for the application, including ample combustion air and circulation air.
2. If high humidity is experienced, a dehumidifier may be used to help lower the water vapor content of the air.
3. Do not use an unvented room heater as the primary heat source.

PROVISIONS FOR ADEQUATE COMBUSTION & VENTILATION AIR

This heater shall not be installed in a confined space or unusually tight construction unless provisions are provided for adequate combustion and ventilation air.

A confined space is an area with volume less than 50 cubic feet per 1,000 Btuh of the combined input rates of all appliances drawing combustion air from that space. Small areas such as equipment rooms are confined spaces. Furnaces installed in a confined space which supply heated air to areas outside the space must draw return air from outside the space through tightly sealed return air ducts. A confined space must have 2 openings into the space for combustion air. One opening must be within 12 inches of the ceiling and the other must be within 12 inches of the floor. The required sizing of these openings is determined by whether inside or outside air is used to support combustion, the method by which the air is brought to the space (vertical or horizontal duct) and by the total input rate of all appliances in the space.

Unusually Tight Construction

The air that leaks around doors and windows may provide enough fresh air for combustion and ventilation. However, in buildings of unusually tight construction, you must provide additional fresh air.

Unusually tight construction is defined as construction where:

a. Walls and ceilings exposed to the outside atmosphere have a continuous water vapor retarder with a rating of one perm or less with openings gasketed or sealed, and
b. Weatherstripping has been added on openable windows and doors, and
c. Caulking or sealants are applied to areas such as joints around window and door frames, between sole plates and floors, between wall-ceiling joints, between wall panels, at penetrations for plumbing, electrical, and gas lines, and at other openings.

If your home meets all of the three criteria above, you must provide additional fresh air. See **"Ventilation Air From Outdoors,"** page 7.

Determining if You Have a Confined or Unconfined Space

Use this worksheet to determine if you have a confined or unconfined space.

Space: Includes the room in which you will install heater plus any adjoining rooms with doorless passageways or ventilation grills between the rooms.

1. Determine the volume of the space (length x width x height).
   Length x Width x Height = _____ cu. ft. (volume of space)
   Example: Space size 16 ft. (length) x 10 ft. (width) x 8 ft. (ceiling height) = 1,280 cu. ft. (volume of space)
   If additional ventilation to adjoining room is supplied with grills or openings, add the volume of these rooms to the total volume of the space.
2. Divide the space volume by 50 cubic feet to determine the maximum BTU/Hr the space can support.
   _____ (volume of space) ÷ 50 cu. ft. = (maximum BTU/Hr the space can support)
   Example: 1,280 cu. ft. (volume of space) ÷ 50 cu. ft. = 25.6 or 25,600 (maximum BTU/Hr the space can support)

3. Add the BTU/Hr of all fuel burning appliances in the space.

Vent-free heater		_____	BTU/Hr
Gas water heater		_____	BTU/Hr
Gas furnace		_____	BTU/Hr
Vented gas heater		_____	BTU/Hr
Gas fireplace logs		_____	BTU/Hr
Other gas appliances*	+	_____	BTU/Hr
Total	=	_____	BTU/Hr
Example: Vented gas heater		20,000	BTU/Hr
Vent-free heater	+	18,000	BTU/Hr
Total	=	38,000	BTU/Hr

*Do not include direct-vent gas appliances. Direct vent draws combustion air from the outdoors and vents to the outdoors.

4. Compare the maximum BTU/Hr the space can support with the actual amount of BTU/Hr used.

_____ BTU/Hr (maximum the space can support)
_____ BTU/Hr (actual amount of BTU/Hr used)

Example:
25,600 BTU/Hr (maximum the space can support)
38,000 BTU/Hr (actual amount of BTU/Hr used)

⚠ WARNING

If the area in which the heater may be operated is smaller than that defined as an unconfined space or if the building is of unusually tight construction, provide adequate combustion and ventilation air by one of the methods described in the National Fuel Gas Code, ANSI Z223.1, Section 5.3 or applicable local codes.

The space in the above example is a confined space because the actual BTU/Hr used is more than the maximum BTU/HR the space can support. You must provide additional fresh air. Your options are as follows:

A. Rework worksheet, adding the space of an adjoining room. If the extra space provides an unconfined space, remove door to adjoining room or add ventilation grills between rooms. See **Ventilation Air From Inside Building.**
B. Vent room directly to the outdoors. See **Ventilation Air From Outdoors.**
C. Install a lower BTU/Hr heater, if lower BTU/Hr size makes room unconfined.

If the actual BTU/Hr used is less than the maximum BTU/Hr the space can support, the space is an unconfined space. You will need no additional fresh air ventilation.

⚠ WARNING

You must provide additional ventilation air in a confined space.

VENTILATION AIR

Ventilation Air From Inside Building

This fresh air would come from an adjoining unconfined space. When ventilating to an adjoining unconfined space, you must provide two permanent openings: one within 12" of the ceiling and one within 12" of the floor on the wall connecting the two spaces (see options 1 and 2, **Figure 1**). You can also remove door into adjoining room (see option 3, **Figure 1**). Each ventilation grill or opening shall have a minimum free area of one square inch per 1,000 BTU/HR of the total input rating of the gas equipment in the confined space.

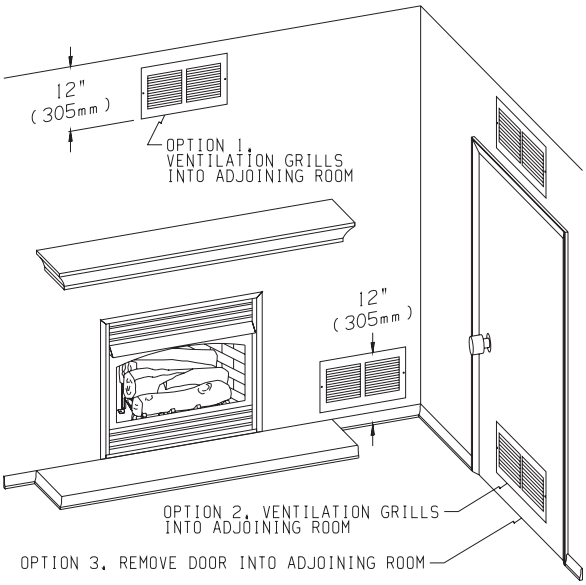

Figure 1

⚠ WARNING

Rework worksheet, adding the space of the adjoining unconfined space. The combined spaces must have enough fresh air to supply all appliances in both spaces.

Ventilation Air From Outdoors

Provide extra fresh air by using ventilation grills or ducts. You must provide two permanent openings: one within 12" of the ceiling and one with 12" of the floor. Connect these items directly to the outdoors or spaces open to the outdoors. These spaces include attics and crawl spaces. In most cases for direct communication with the outdoors or direct communication through a vertical duct a free area opening of one square inch per 4,000 BTU/HR of heater input rating for each grill. If a horizontal duct is used, a grill free area or duct opening shall have a free area opening of one square inch per 2,000 BTU/HR for each grill. Follow the *National Fuel Code NFPA 54/ANSI Z223.1, Section 5.3 Air for Combustion and Ventilation* for required size of ventilation grills or ducts.

IMPORTANT: Do not provide openings for inlet or outlet air into attic if attic has a thermostat-controlled power vent. Heated air entering the attic will activate the power vent.

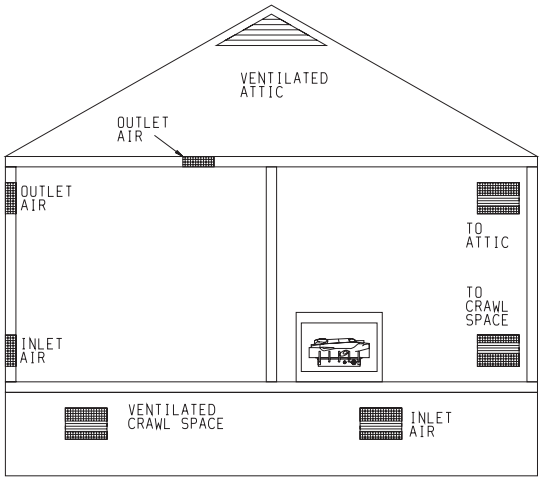

Figure 2

INTRODUCTION

Instructions to Installer

1. Installer must leave instruction manual with owner after installation.
2. Installer must have owner fill out and mail warranty card supplied with unvented room heater.
3. Installer should show owner how to start and operate unvented room heater.

Always consult your local Building Department regarding regulations, codes or ordinances which apply to the installation of an unvented room heater.

This appliance may be installed in an aftermarket* manufactured (mobile) home, where not prohibited by state or local codes.

*Aftermarket: Completion of sale, not for purpose of resale, from the manufacturer.

Well Head Gas Installations

Some natural gas utilities use “well head” gas. This may affect the Btu output of the unit and promote sooting. Units shall not be converted to use well head gas.

This appliance is only for use with the type of gas indicated on the rating plate. This appliance is not convertible for use with other gases.

⚠ WARNING

Any change to this heater or its controls can be dangerous. Improper installation or use of the heater can cause serious injury or death from fire, burns, explosion or carbon monoxide poisoning.

Operation

This unvented fireplace requires no outside venting. State and local codes in some areas prohibit the use of unvented fireplace.

Millivolt Controls

The valve regulator controls the burner pressure which should be checked at the pressure test point. Turn captured screw counter clockwise 2 or 3 turns and then place tubing to pressure gauge over test point (Use test point “A” closest to control knob). After taking pressure reading, be sure and turn captured screw clockwise firmly to re-seal. Do not over torque. Check for gas leaks.

Millivolt System

When you ignite the pilot, the thermocouple produces millivolts (electrical current) which energizes the magnet in the gas valve. After 30 seconds to 1 minute time period you can release the gas control knob and the pilot will stay ON. Allow your pilot flame to operate an additional one to two minutes before you turn the gas control knob from the PILOT position to the ON position. This time period allows the millivolts (electrical current) to build-up to a sufficient level allowing the gas control to operate properly.

⚠ WARNING

This appliance is equipped for (Natural Gas or Propane) Gas. Field conversion is not permitted.

General Information

This series is design certified in accordance with American National Standard Z21.11.2 by the Canadian Standards Association as an Unvented Room Heater and should be installed according to these instructions.

Any alteration of the original design, installed other than as shown in these instructions or use with a type of gas not shown on the rating plate is the responsibility of the person and company making the change.

Important

All correspondence should refer to complete Model Number, Serial Number and type of gas.

Attention: During initial use of log you will detect an odor as the log is cured. Also, during the curing process the ceramic log will burn with a yellow flame.

Notice: During initial firing of this unit, its paint will bake out, and smoke will occur. To prevent triggering of smoke alarms, ventilate the room in which the unit is installed.

Installation on Rugs and Tile

If this appliance is installed directly on carpeting, tile or other combustible material other than wood flooring the appliance shall be installed on a metal or wood panel extending the full width and depth of the appliance.

The base referred to above does not mean the fire-proof base as used on wood stoves. The protection is for rugs that are extremely thick and light colored tile.

Solid-fuels shall not be burned in a masonry or *UL 127* factory-built fireplace in which an unvented room heater is installed.

Qualified Installing Agency

Installation and replacement of gas piping, gas utilization equipment or accessories and repair and servicing of equipment shall be performed only by a qualified agency. The term "qualified agency" means any individual, firm, corporation or company which either in person or through a representative is engaged in and is responsible for (a) the installation or replacement of gas piping or (b) the connection, installation, repair or servicing of equipment, who is experienced in such work, familiar with all precautions required and has complied with all the requirements of the authority having jurisdiction.

Commonwealth of Massachusetts: The installation must be made by a licensed plumber or gas fitter in the Commonwealth of Massachusetts.

Sellers of unvented Propane or Natural Gas-fired supplemental room heaters shall provide to each purchaser a copy of 527 CMR 30 upon sale of the unit.

In the Commonwealth of Massachusetts, unvented Propane and Natural Gas-fired space heaters shall be prohibited in bedrooms and bathrooms.

The installation must conform with local codes or, in the absence of local codes, with the *National Fuel Gas Code, ANSI Z223.1.**

**Available from the American National Standards Institute, Inc. 1430 Broadway, New York, N.Y. 10018.*

⚠ WARNING

Failure to keep the primary air opening(s) of the burner(s) clean may result in sooting and property damage.

GAS SUPPLY

Check all local codes for requirements, especially for the size and type of gas supply line required.

RECOMMENDED GAS PIPE DIAMETER				
Pipe Length	Schedule 40 Pipe Inside Diameter		Tubing, Type L Outside Diameter	
	Natural	Propane	Natural	Propane
0-10 feet 0-3 meters	1/2” 12.7mm	3/8” 9.5mm	1/2” 12.7mm	3/8” 9.5mm
10-40 feet 4-12 meters	1/2” 12.7mm	1/2” 12.7mm	5/8” 15.9mm	1/2” 12.7mm
40-100 feet 13-30 meters	1/2” 12.7mm	1/2” 12.7mm	3/4” 19mm	1/2” 12.7mm
100-150 feet 31-46 meters	3/4” 19mm	1/2” 12.7mm	7/8” 22.2mm	3/4” 19mm

NOTICE: Never use plastic pipe. Check to confirm whether your local codes allow copper tubing or galvanized.
NOTICE: Since some municipalities have additional local codes, it is always best to consult your local authority and installation code.

Installing a New Main Shut-Off Valve
Each appliance should have its own manual shut-off valve.
A manual main gas shut-off should be located in the vicinity of the unit. Where none exists, or where its size or location is not adequate, contact your local authorized installer for installation or relocation. Compounds used on threaded joints of gas piping shall be resistant to the action of liquefied petroleum gases. The gas lines must be checked for leaks by the installer. This should be done with a soap solution watching for bubbles on all exposed connections, and if unexposed, a pressure test should be made.

Never use an exposed flame to check for leaks. Appliance must be disconnected from piping at inlet of control valve and pipe capped or plugged for pressure test. Never pressure test with appliance connected; control valve will sustain damage!

A gas valve and ground joint union should be installed in the gas line upstream of the gas control to aid in servicing. It is required by the National Fuel Gas Code that a drip line be installed near the gas inlet. This should consist of a vertical length of pipe tee connected into the gas line that is capped on the bottom in which condensation and foreign particles may collect.
The use of the following gas connectors is recommended:
— ANS Z21.24 Appliance Connectors of Corrugated Metal Tubing and Fittings
— ANS Z21.45 Assembled Flexible Appliance Connectors of Other Than All-Metal Construction
The above connectors may be used if acceptable by the authority having jurisdiction. The Commonwealth of Massachusetts requires that a flexible appliance connector cannot exceed three feet in length.

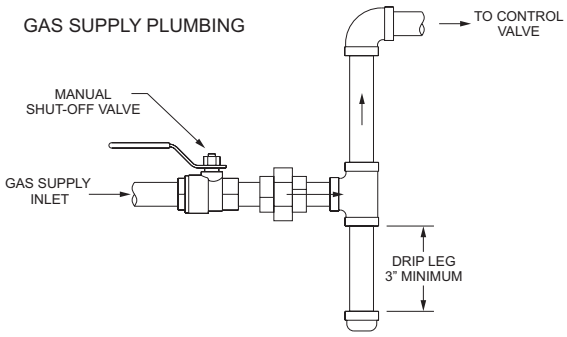

Figure 14

Pressure Testing of the Gas Supply System
1. To check the inlet pressure to the gas valve, a 1/8" (3mm) N.P.T. plugged tapping, accessible for test gauge connection, must be placed immediately upstream of the gas supply connection to the appliance.
2. The appliance and its individual shut-off valve must be disconnected from the gas supply piping system during any pressure testing of that system at test pressures in excess of 1/2 psig (3.5 kPa).
3. The appliance must be isolated from the gas supply piping system by closing its individual manual shut-off valve during any pressure testing of the gas supply piping system at test pressures equal to or less than 1/2 psig (3.5 kPa).

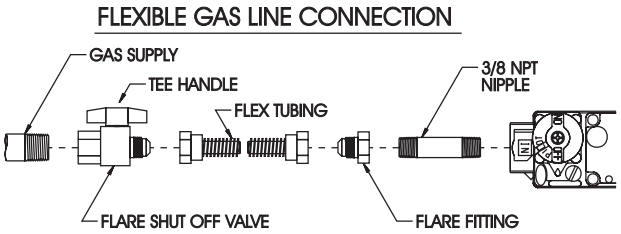

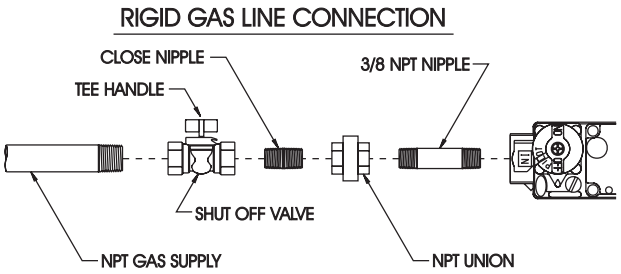

Figure 3

Attention! If one of the above procedures results in pressures in excess of 1/2 psig (14" w.c.) (3.5 kPa) on the appliance gas valve, it will result in a hazardous condition.

Checking Manifold Pressure
Millivolt and Intermittent Models Natural Gas will have a manifold pressure of approximately 3.5" w.c. (.871kPa) for maximum input or 1.7" w.c. (.423kPa) for minimum input at the pressure regulator outlet with the inlet pressure to the pressure regulator from a minimum of 5.0" w.c. (1.120kPa) for the purpose of input adjustment to a maximum of 10.5" w.c. (2.614kPa).

Hydraulic Thermostat Models Natural Gas will have a manifold pressure of approximately 6.0" w.c. (1.49kPa) at the pressure regulator outlet with the inlet pressure to the pressure regulator from a minimum of 7.0" w.c. (1.74kPa) for the purpose of input adjustment to a maximum of 10.5" w.c. (2.615kPa).

Millivolt and Intermittent Models Propane Gas will have a manifold pressure approximately 10.0"w.c. (2.49kPa) for maximum input or 6.3"w.c. (1.568kPa) for minimum input at the pressure regulator outlet with the inlet pressure to the pressure regulator from a minimum of 11.0"w.c. (2.739kPa) for the purpose of input adjustment to a maximum of 13.0"w.c. (3.237kPa).

Hydraulic Thermostat Models Propane Gas will have a manifold pressure approximately 10.0"w.c. (2.49kPa) at the pressure regulator outlet with the inlet pressure to the pressure regulator from a minimum of 11.0"w.c. (2.739kPa) for the purpose of input adjustment to a maximum of 13.0"w.c. (3.237kPa).

INSTALLATION OF FIREPLACE INTO MANTEL

1. Position base approximately 5" from wall surface.
2. Attach nailing flange to fireplace top with two 10 x 1/2" screws.
3. Place fireplace on top of base.
4. Gas line connections must be made at this time. When facing the fireplace the gas supply will enter on right-hand side. See "Gas Supply" Page 8.
5. Place right mantel side against base. Insert dowels in breastboard into right mantel side. Breastboard will rest on fireplace top and in front of nailing flange.
   Attention: Placing the breastboard in front of nailing flange will secure the fireplace.
6. Place left mantel side against base. Insert dowels in breastboard into left mantel side.
7. Use four pre-drilled screw holes on back of breastboard to secure breastboard to mantel sides with four Phillips wood screws.
8. Place mantel top onto mantel.
9. Installation of fireplace into mantel is completed.

Installation of Trim

1. Lower bottom louver.
2. Remove screen from fireplace.
3. Remove top louver from fireplace (two Phillips screws).
4. Attach right and lift trim to fireplace. Use two Phillips screws for each side.
5. Attach trim top to fireplace with two Phillips screws.
6. Reattach top louver to fireplace using two Phillips screws.
7. Reattach screen to fireplace.
8. Raise bottom louver.

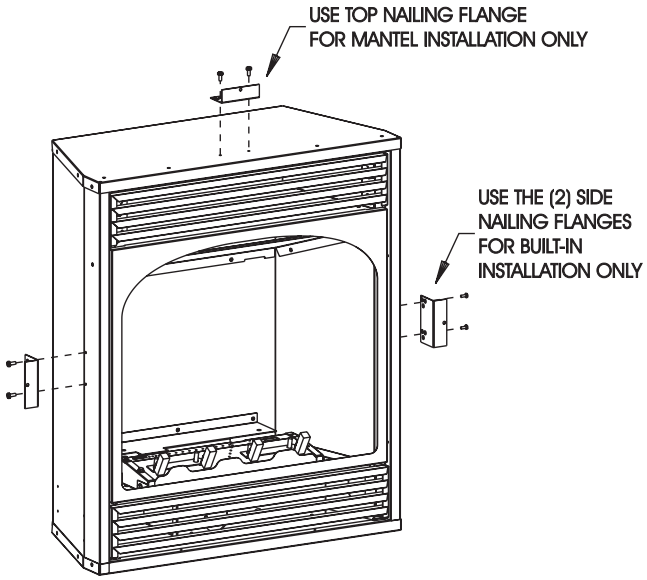

Figure 8

Installing Fireplace in Mantel

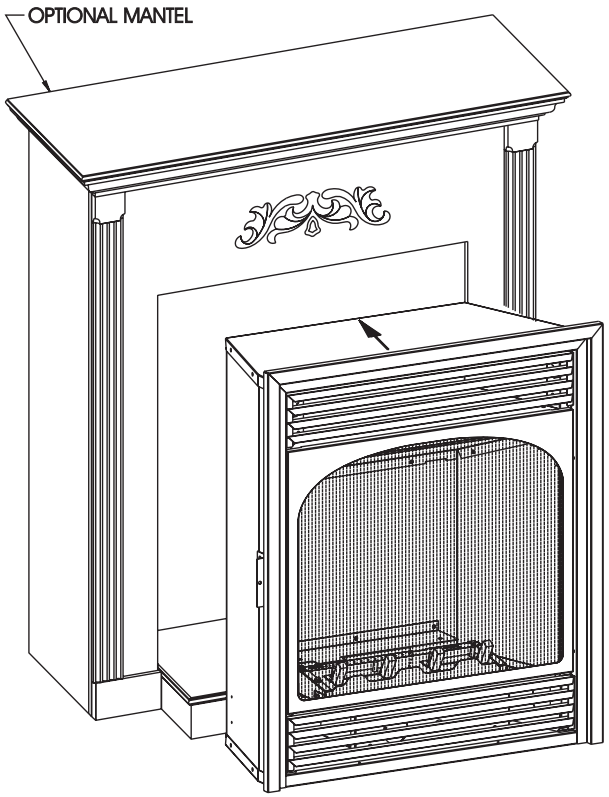

Figure 9

BUILT-IN FIREPLACE INSTALLATION

Built-In Fireplace Installation

Built-in installation of this fireplace involves installing fireplace into a framed-in enclosure. This makes the front of fireplace flush with wall. If installing a mantel above the fireplace, you must follow the clearances shown in Figure 5, page 9. Follow the instructions below to install the fireplace in this manner.

Frame in rough opening. Use dimensions shown in Figure 10 for a conventional rough opening. Use dimensions shown in Figure 11 for corner rough opening. Be sure to provide gas line for fireplace and electrical power for FBB6 optional blower assembly.

1. Attach two nailing flanges to firebox sides with two 10 x 1/2" screws for each nailing flange.
2. Gas line connections must be made at this time. When facing the appliance the gas supply will enter on right-hand side. See "Gas Supply" Page 8.
3. Insert fireplace into enclosure.
4. Attach nailing flanges to framing with a screw or nail.
5. Finished wall surface will be flush to the leading edge of fireplace top and sides.
6. Installation of built-in fireplace is completed.

Installation of Trim

1. Lower bottom louver.
2. Remove screen from fireplace.
3. Remove top louver from fireplace.
4. Attach right and lift trim to fireplace. Use two Phillips screws for each side.
5. Attach trim top to fireplace with two Phillips screws.
6. Reattach top louver to fireplace using two Phillips screws.
7. Reattach screen to fireplace.
8. Raise bottom louver.

Rough Opening for Installing in Wall

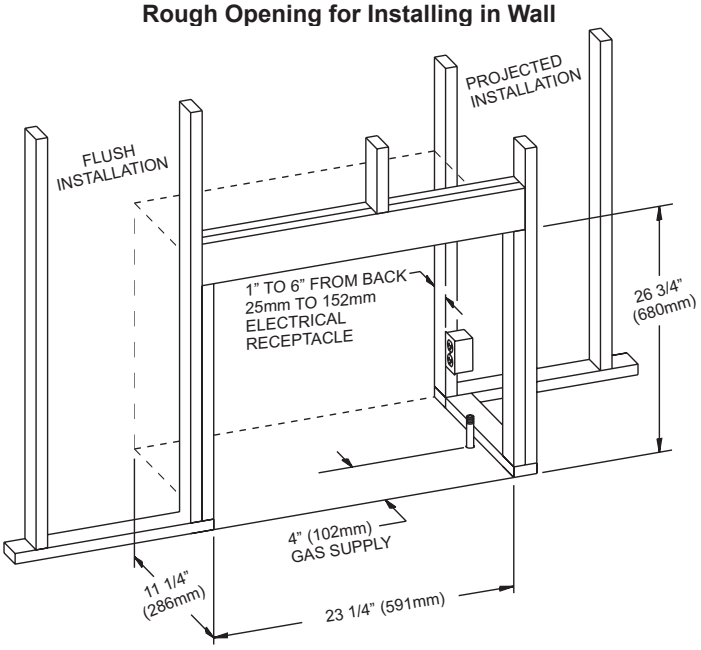

Figure 10

Rough Opening for Installing in Corner

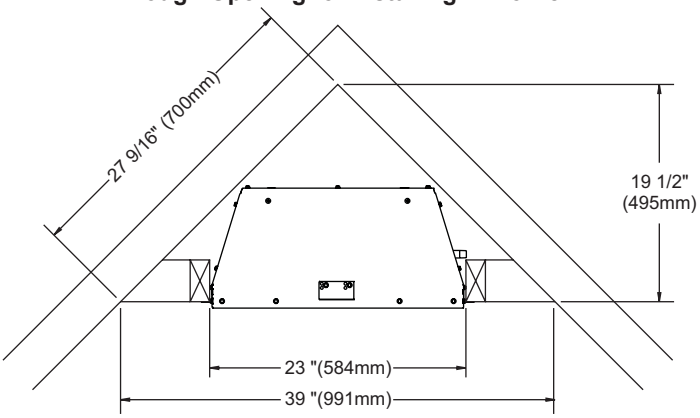

Figure 11

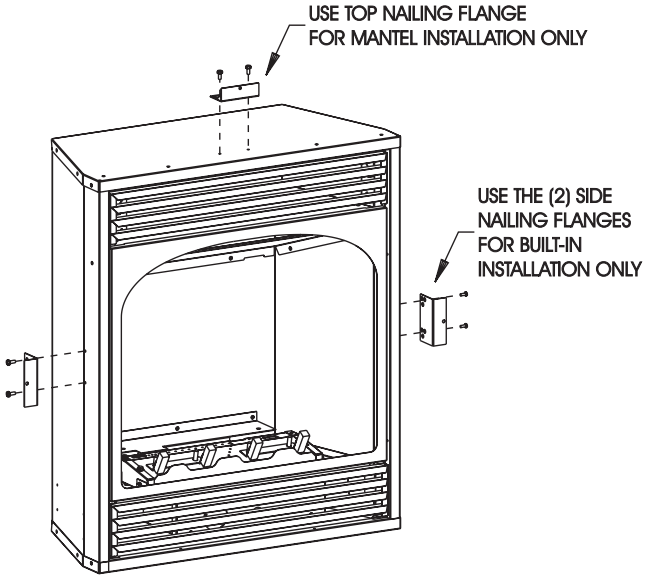

Figure 12

VFP24 LOG IDENTIFICATION

Log Description	Part Number	Front View	Top View
Log A	R7506		
Log B	R7504		
Log C	R7505		

LOG PLACEMENT

Before you begin: Do not, handle these logs with your bare hands! Always wear gloves to prevent skin irritation. After handling logs, wash your hands gently with soap and water.

ALL LOGS

The positioning of the logs is critical to the safe and clean operation of this heater. Sooting and other problems may result if the logs are not properly and firmly positioned in the appliance.

The following Warning applies when log set is installed onto an unvented gas burner assembly.

⚠ WARNING

This appliance is equipped for Natural or Propane Gas. Field conversion is not permitted.

⚠ WARNING

Failure to position the parts in accordance with this diagram or failure to use only parts specifically approved with this appliance may result in property damage or personal injury.

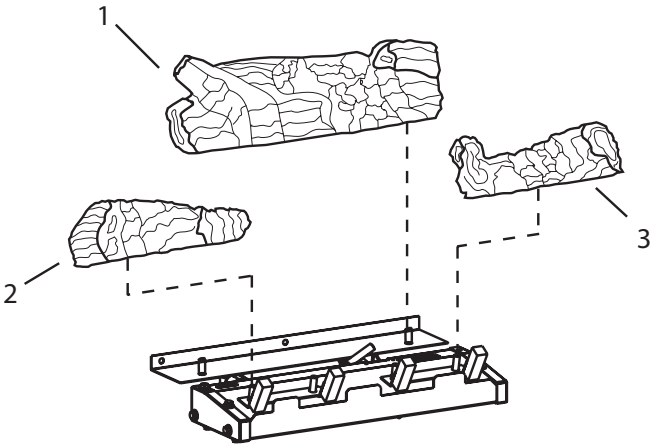

INDEX NUMBER	PART NUMBER	DESCRIPTION
1	R-7506	LOG A
2	R-7504	LOG B
3	R-7505	LOG C

NOTICE: Replacement Glowing Embers must be purchased from an authorized distributor.

Attention: When ordering parts, it is very important that part number and description of part coincide.
USE ONLY MANUFACTURER'S REPLACEMENT PARTS. USE OF ANY OTHER PARTS COULD CAUSE INJURY OR DEATH.

⚠ WARNING

All previously applied Glowing Embers must be removed prior to reapplication.

Applying Glowing Embers as shown in the image below.
NOTICE: Application of excess Glowing Embers may adversely affect performance of the fireplace.

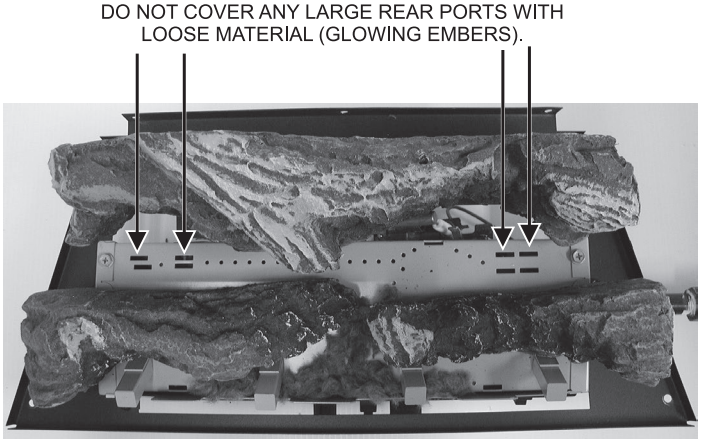

Glowing Ember Placement

LOG PLACEMENT

1. Place Log A between rear log support and burner pan. See image below

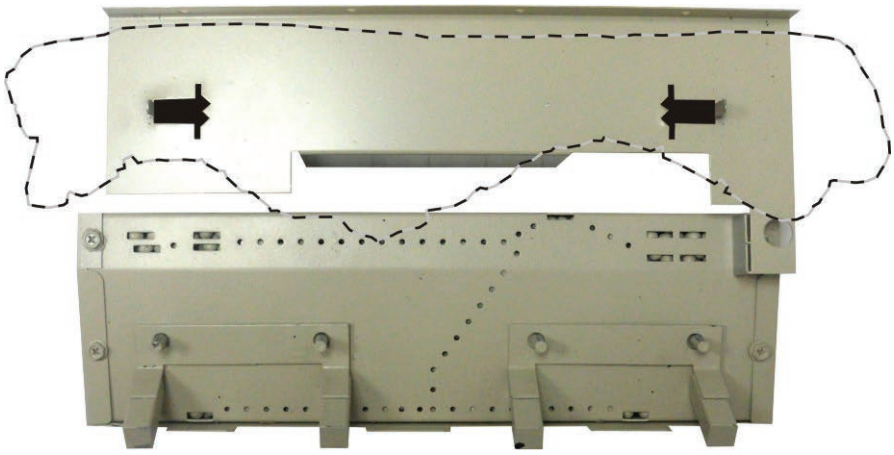

Top View

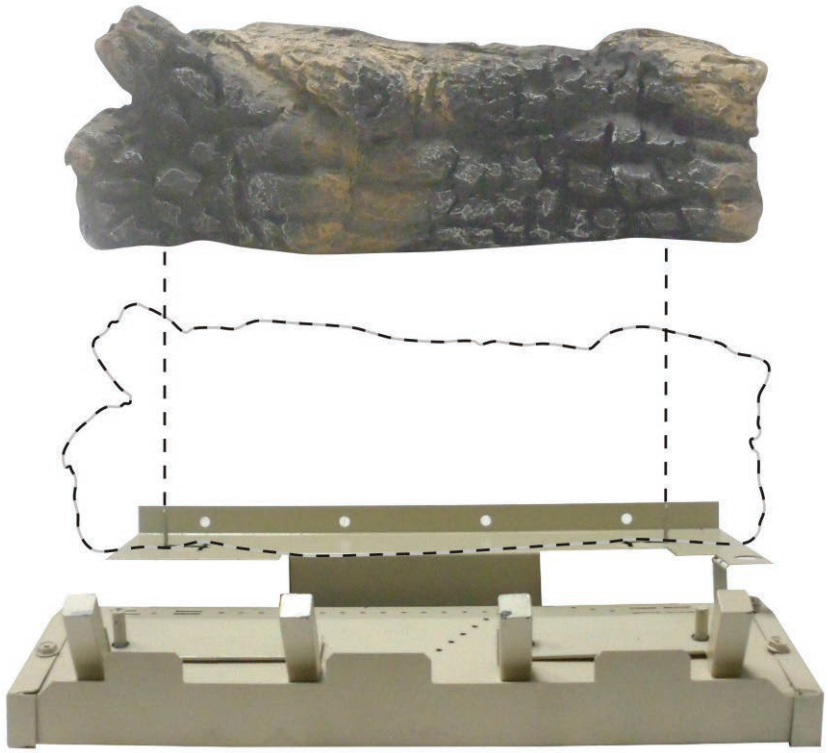

Front View

LOG PLACEMENT

2. Place Log B onto the two left, front pins on the burner pan.

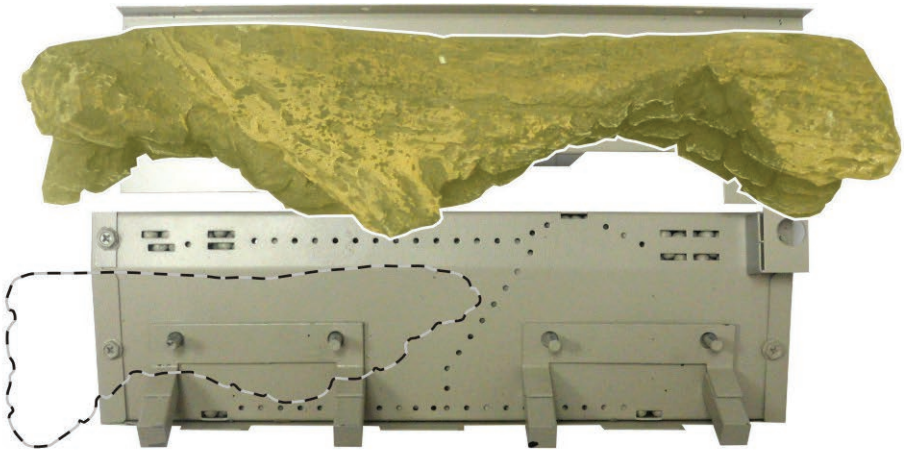

Top View

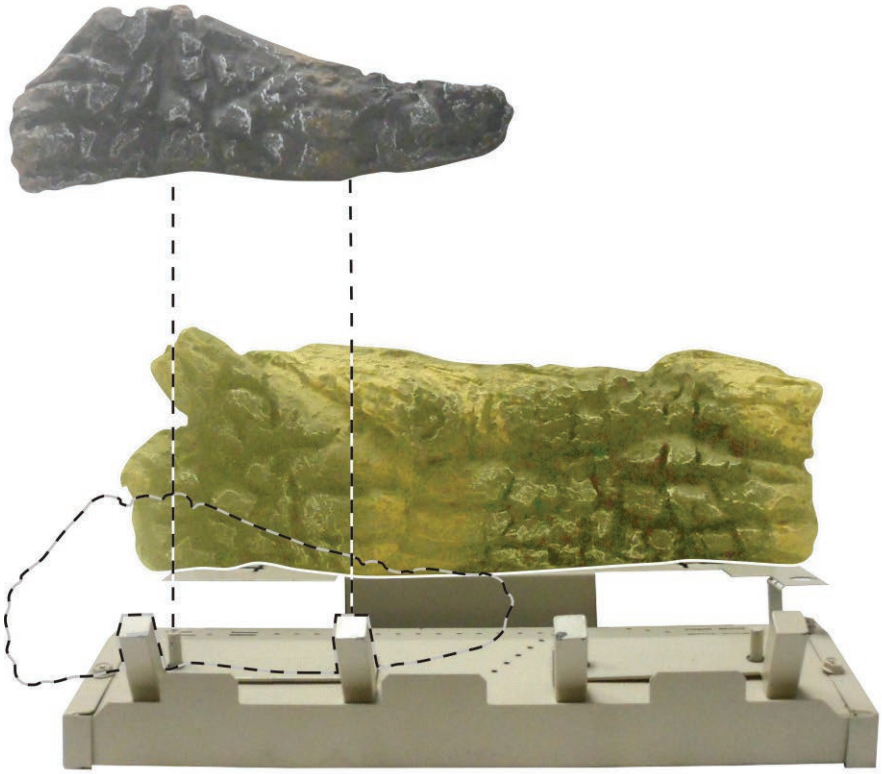

Front View

LOG PLACEMENT

3. Place Log C onto the two right, front pins on burner pan. See image below.

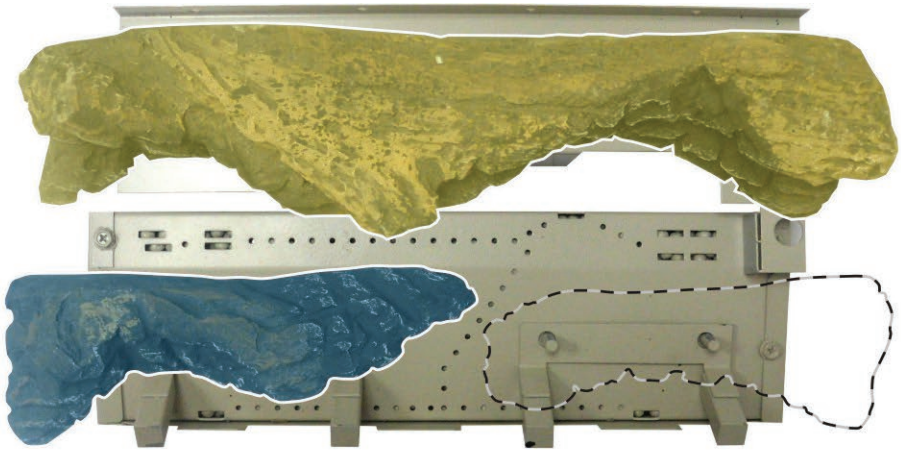

Top View

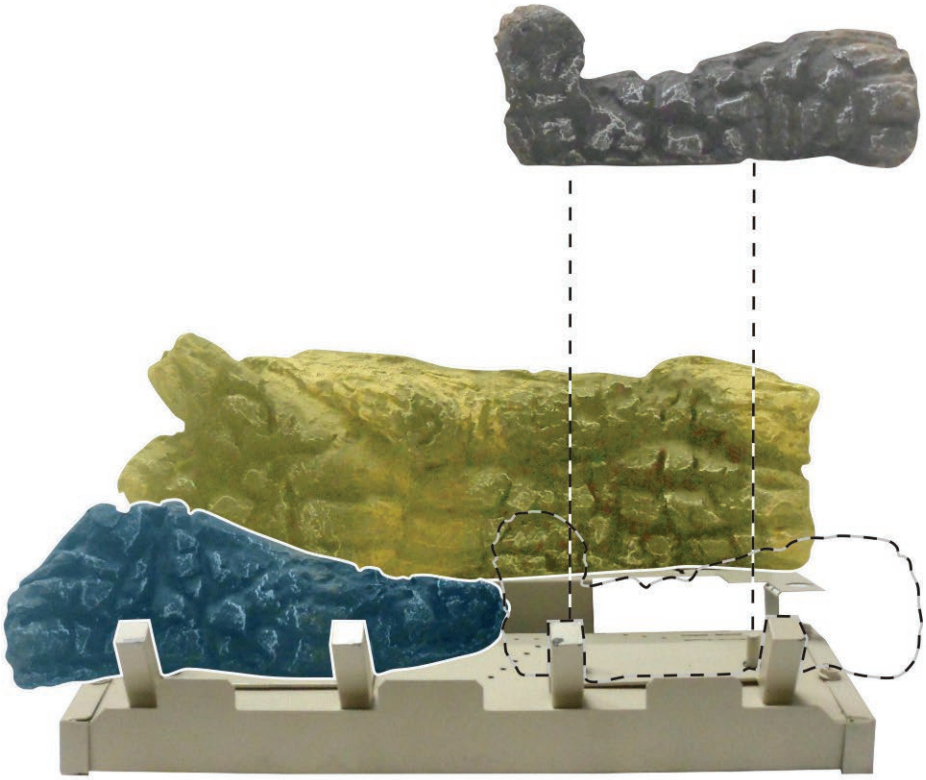

Front View

LOG PLACEMENT

4. Log set assembly is complete.

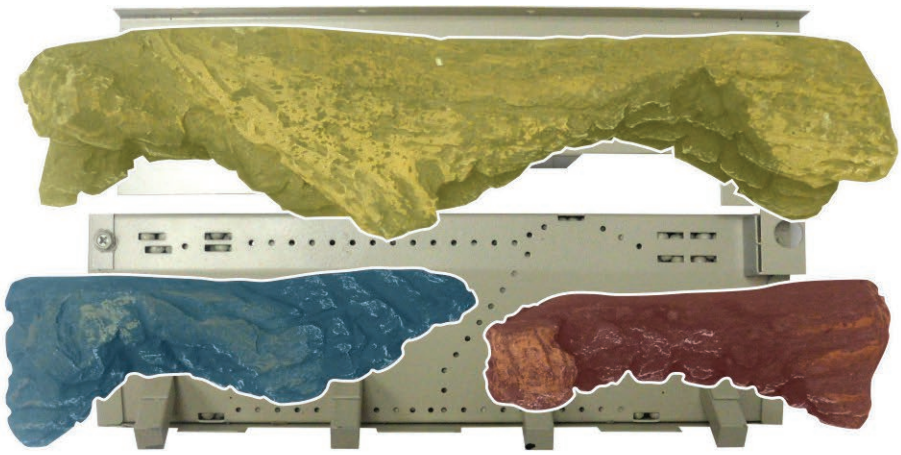

Top View

Front View

PLACEMENT OF GLOWING EMBERS (ROCK WOOL)

Provided with the log set is a small bag of glowing embers (rock wool) to be placed between logs on the flat metal surface of the burner.

Placement of the embers (rock wool) is very individual and light coverage of the areas indicated will provide your best effects. We recommend separation of the rock wool by hand and make your coverage as light and fluffy as possible.

Place just enough embers (rock wool) on the burner to obtain the glow and a gold yellow flame.

A thin layer of rock wool should be placed under open space between the right and left middle logs.

Do not place rock wool over large ports in rear portion of burner.

Do not place rock wool in the area of the pilot assembly.

Replacement of loose material (glowing embers) must be purchased from Empire Comfort Systems, Inc. Application of excess loose material (glowing embers) may adversely affect performance of the heater.

⚠ WARNING

All previously applied loose material must be removed prior to reapplication.

Refer to Parts List, Pages 33-34 to order loose material (rock wool).

REPLACEMENT LOOSE MATERIAL (GLOWING EMBERS)	
15998	Supplied Rock Wool
PE-20-1	Optional Platinum Bright Embers Kit

NOTICE: A single layer of embers is to be used when applying Platinum Bright Embers (alone or in combination with production embers) to the burner.

OPERATION INSTRUCTIONS/FLAME APPEARANCE

Flames from the pilot (rear right back side of the pan burner) as well as the main flame should be visually checked as the log set is installed.

In normal operation at full rate after 10 to 15 minutes, the flame appearance should be sets of yellow flames.

***NOTICE*:** all flames will be random by design, flame height will go up and down.

Glowing embers (rock wool) can cover the pan burner in between the front and middle logs, but very little is necessary to cover this area. Excess ember material causes the yellow flame to become orange and stringy. Apply just enough to obtain slow glow and a gold, yellow flame.

Avoid any drafts that alter burner flame patterns. Do not allow fans to blow directly into fireplace. Do not place a blower inside the burner area of the firebox. Ceiling fans may create drafts that alter flame patterns. Sooting and improper burning will result.

During manufacturing, fabricating and shipping, various components of this appliance are treated with certain oils, films or bonding agents. These chemicals are not harmful, but may produce smoke and smells as they burn off during the initial operation of the appliance, possibly causing headaches or eye or lung irritation. This is a normal and temporary occurrence.

The initial break-in operation should last 2-3 hours with the burner at the highest setting. Provide maximum ventilation by opening windows or doors to allow odors to dissipate. Any odors remaining after this initial break-in will be slight and will disappear with continued use.

This appliance must not be used with glass doors in the closed position. This can lead to pilot outages and severe sooting outside the fireplace.

PILOT FLAME CHARACTERISTICS

Figures 13, 14 and 15 show a correct pilot flame pattern. The correct flame will be blue and will extend beyond the thermocouple. The flame will surround the thermocouple just below the tip. A slight yellow flame may occur where the pilot flame and main burner flame meet. **Figures 16, 17 and 18** show an incorrect pilot flame pattern. The incorrect pilot flame is not touching the thermocouple. This will cause the thermocouple to cool. When the thermocouple cools, the heater will shut down.

Correct Pilot Flame Pattern

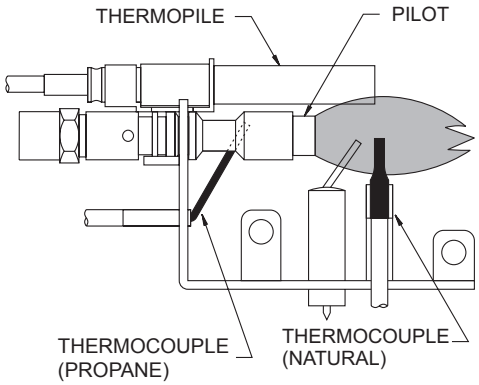

Millivolt Pilot, Figure 13

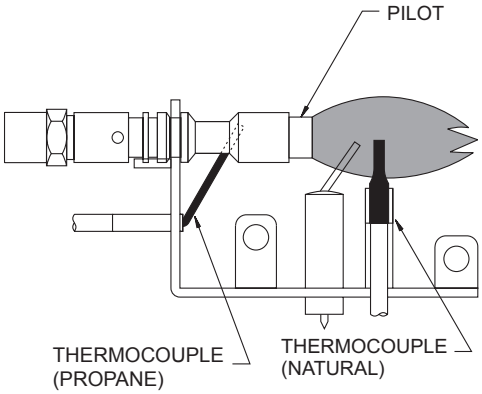

Hydraulic Thermostat Pilot, Figure 14

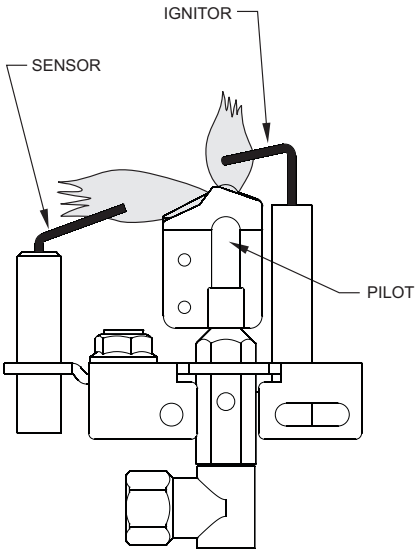

Intermittent Pilot, Figure 15

Incorrect Pilot Flame Pattern

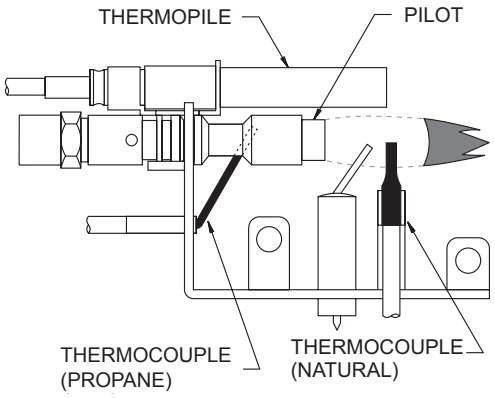

Millivolt Pilot, Figure 16

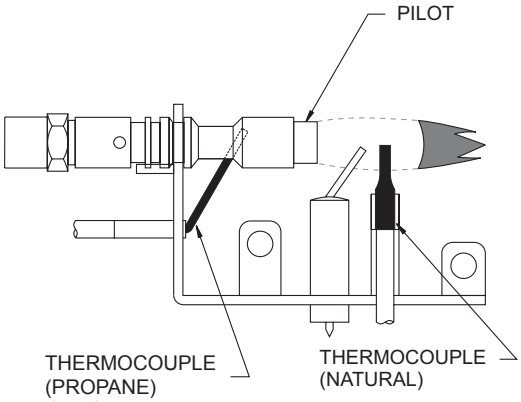

Hydraulic Thermostat Pilot, Figure 17

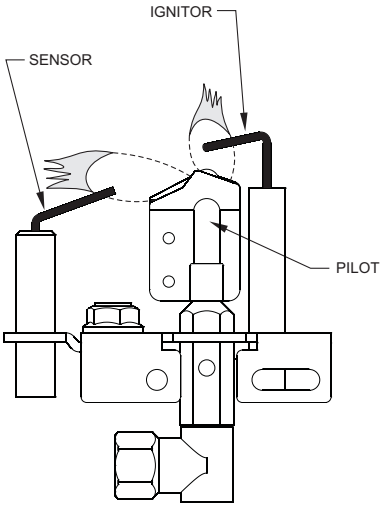

Intermittent Pilot, Figure 18

If pilot flame pattern is incorrect as shown in Figures 16 and 17

- **See Troubleshooting, Page 22**

If pilot flame pattern is incorrect, as shown in Figure 18.

- **See Troubleshooting, pages 25 - 27.**

HYDRAULIC THERMOSTAT MODELS LIGHTING INSTRUCTIONS

FOR YOUR SAFETY READ BEFORE LIGHTING

⚠ WARNING

If you do not follow these instructions exactly, a fire or explosion may result causing property damage, personal injury or loss of life.

A. This appliance has a pilot which must be lighted by hand. When lighting the pilot, follow these instructions exactly.

B. BEFORE LIGHTING smell all around the appliance area for gas. Be sure to smell next to the floor because some gas is heavier than air and will settle on the floor.

WHAT TO DO IF YOU SMELL GAS

- **Do not try to light any appliance.**
- **Do not touch any electrical switch; Do not use any phone in your building.**
- **Immediately call your gas supplier from a neighbor's phone. Follow the gas supplier's instructions.**
- **If you cannot reach your gas supplier, call the fire department.**

C. Use only your hand to push in or turn the gas control knob. Never use tools. If the knob will not push in or turn by hand, don't try to repair it; call a qualified service technician. Force or attempted repair may result in a fire or explosion.

D. Do not use this appliance if any part has been under water. Immediately call a qualified service technician to inspect the appliance and to replace any part of the control system and any gas control which has been under water.

LIGHTING INSTRUCTIONS

1. STOP! Read the safety information above.
2. Set thermostat (gas control knob) to lowest setting.
3. Turn off all electric power to the appliance (if applicable).
4. Push in gas control knob slightly and turn clockwise to "OFF." Do not force.

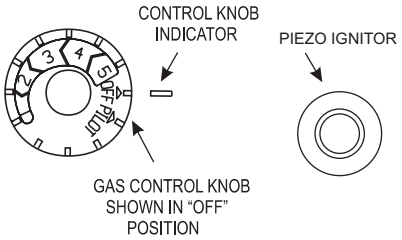

5. Wait ten minutes to clear out any gas. Then smell for gas, including near floor. If you smell gas, STOP! Follow "B" in the safety information on other side. If you do not smell gas, Go to the Next step.
6. Find pilot - the pilot is located in front of rear log.

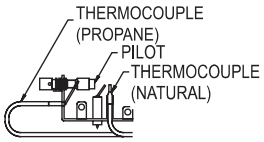

7. Turn manual gas control knob counterclockwise to "PILOT."
8. Push in manual gas control knob all the way and hold in. Repeatedly push the piezo ignitor button until pilot is lit (or use a match to light). Continue to hold the control knob in for about one minute after the pilot is lit. Release knob and it will pop back up. Pilot should remain lit. If it goes out, repeat steps 4 through 8.
   - If knob does not pop up when released, stop and immediately call a qualified service technician or gas supplier.
   - If the pilot will not stay lit after several tries, turn the gas control knob to "OFF" and call a qualified service technician or gas supplier.
9. Attention! Gas control has an INTERLOCK latching device. When the pilot is initially lit and the safety magnet is energized (pilot stays "ON") the INTERLOCK latching device becomes operative. If the gas control is turned to the "OFF" position or gas flow to the appliance is shut off, the pilot cannot be relighted until the safety magnet is de-energized (approximately 60 seconds). There will be an audible "click" when the safety magnet in the gas control is de-energized. Pilot can now be relighted. Repeat steps 4 through 8.
10. Turn the gas control knob counterclockwise to "HIGH (5)."
11. Turn on all electric power to the appliance (if applicable).
12. Set the thermostat (gas control knob to desired setting from "HIGH (5)" to "LOW (1)."

TO TURN OFF GAS TO APPLIANCE

1. Set thermostat (gas control knob) to lowest setting.
2. Turn off all electric power to appliance if service is to be performed (if applicable).
3. Push in gas control knob slightly and turn clockwise to "OFF". Do not force.

10,000 BTU MILLIVOLT CONTROL VALVE LIGHTING INSTRUCTIONS

FOR YOUR SAFETY READ BEFORE LIGHTING

⚠ WARNING

If you do not follow these instructions exactly, a fire or explosion may result causing property damage, personal injury or loss of life.

A. This appliance has a pilot which must be lighted by hand. When lighting the pilot, follow these instructions exactly.

B. BEFORE LIGHTING smell all around the appliance area for gas. Be sure to smell next to the floor because some gas is heavier than air and will settle on the floor.

WHAT TO DO IF YOU SMELL GAS

- **Do not try to light any appliance.**
- **Do not touch any electrical switch; Do not use any phone in your building.**
- **Immediately call your gas supplier from a neighbor's phone. Follow the gas supplier's instructions.**
- **If you cannot reach your gas supplier, call the fire department.**

C. Use only your hand to push in or turn the gas control knob. Never use tools. If the knob will not push in or turn by hand, don't try to repair it; call a qualified service technician. Force or attempted repair may result in a fire or explosion.

D. Do not use this appliance if any part has been under water. Immediately call a qualified service technician to inspect the appliance and to replace any part of the control system and any gas control which has been under water.

LIGHTING INSTRUCTIONS

1. STOP! Read the safety information above.
2. Open bottom louver assembly, (if applicable).
3. Set REMOTE/OFF/ON switch to "OFF."
4. Turn off all electric power to the appliance (if applicable).
5. Push in gas control knob slightly and turn clockwise ↷ to "OFF."
6. Wait ten minutes to clear out any gas. Then smell for gas, including near the floor. If you smell gas, STOP! Follow "B" in the safety information above. If you do not smell gas, go to the next step.
7. Find pilot - Follow metal tube from gas control. The pilot is located next to the burner, near the right side.
8. Turn gas control knob counterclockwise ↶ to "PILOT."

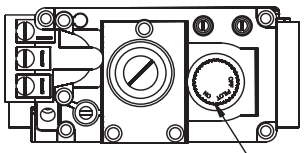

GAS CONTROL KNOB SHOWN IN "OFF" POSITION.

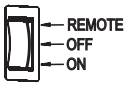

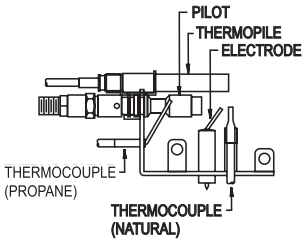

9. Push in control knob all the way and hold in. Repeatedly push the Piezo Ignitor Button until the pilot is lit. Continue to hold the control knob in for about one minute after the pilot is lit. Release knob, and it will pop back up. Pilot should remain lit. If it goes out, repeat steps 5 through 9.
   - If knob does not pop up when released, STOP and IMMEDIATELY call a qualified service technician or gas supplier.
   - If the pilot will not stay lit after several tries, turn the gas control knob to "OFF" and call your service technician or gas supplier.
10. Turn gas control knob counterclockwise ↶ to "ON."
11. Set REMOTE/OFF/ON switch to desired setting.
12. Turn on all electric power to the appliance (if applicable).
13. Close bottom louver assembly (if applicable).

TO TURN OFF GAS TO APPLIANCE

1. Open bottom louver assembly (if applicable).
2. Set REMOTE/OFF/ON switch to OFF.
3. Turn off all electric power to the appliance if service is to be performed (if applicable).
4. Push in gas control knob slightly and turn clockwise ↷ to "OFF." Do not force.
5. Close bottom louver assembly (if applicable).

MILLIVOLT CONTROL LIGHTING INSTRUCTIONS

FOR YOUR SAFETY READ BEFORE LIGHTING

⚠ WARNING

If you do not follow these instructions exactly, a fire or explosion may result causing property damage, personal injury or loss of life.

A. This appliance has a pilot which must be lighted by hand. When lighting the pilot, follow these instructions exactly.

B. BEFORE LIGHTING smell all around the appliance area for gas. Be sure to smell next to the floor because some gas is heavier than air and will settle on the floor.

WHAT TO DO IF YOU SMELL GAS

- **Do not try to light any appliance.**
- **Do not touch any electrical switch; do not use any phone in your building.**
- **Immediately call your gas supplier from a neighbor's phone. Follow the gas supplier's instructions.**
- **If you cannot reach your gas supplier, call the fire department.**

C. Use only your hand to push in or turn the gas control knob. Never use tools. If the knob will not push in or turn by hand, don't try to repair it; call a qualified service technician. Force or attempted repair may result in a fire or explosion.

D. Do not use this appliance if any part has been under water. Immediately call a qualified service technician to inspect the appliance and to replace any part of the control system and any gas control which has been under water.

LIGHTING INSTRUCTIONS

1. STOP! Read the safety information label.
2. Open bottom louver assembly.
3. Set REMOTE/OFF/ON switch to "OFF."
4. Turn off all electric power to the appliance (if applicable).
5. Push in gas control knob slightly and turn clockwise to "OFF." NOTE: Knob cannot be turned from "PILOT" to "OFF" unless knob is pushed in slightly. Do not force.
6. Wait ten minutes to clear out any gas. Then smell for gas, including near the floor. If you smell gas, STOP! Follow "B" in the safety information above. If you do not smell gas, go to the next step.
7. Find pilot - Follow metal tube from gas control. The pilot is behind the burner on the right side.

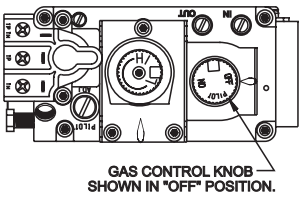

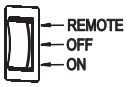

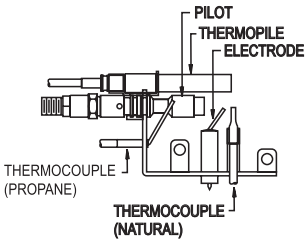

8. Turn gas control knob counterclockwise to "PILOT."
9. Push in control knob all the way and hold in. Repeatedly push the Piezo Ignitor Button until the pilot is lit. Continue to hold the control knob in for about one minute after the pilot is lit. Release knob, and it will pop back up. Pilot should remain lit. If it goes out, repeat steps 5 through 9.
   - If knob does not pop up when released, STOP and IMMEDIATELY call a qualified service technician or gas supplier.
   - If the pilot will not stay lit after several tries, turn the gas control knob to "OFF" and call your service technician or gas supplier.
10. Turn gas control knob counterclockwise to "ON."
11. Set REMOTE/OFF/ON switch to desired setting.
12. Turn on all electric power to the appliance (if applicable).
13. Close bottom louver assembly.

TO TURN OFF GAS TO APPLIANCE

1. Open bottom louver assembly (if applicable).
2. Set REMOTE/OFF/ON switch to OFF.
3. Turn off all electric power to the appliance if service is to be performed (if applicable).
4. Push in gas control knob slightly and turn clockwise to "OFF." Do not force.
5. Close bottom louver assembly (if applicable).

MILLIVOLT WIRING

Label all wires prior to disconnection when servicing controls. Wiring errors can cause improper and dangerous operation. Verify proper operation after servicing.

Millivolt thermopile is self powered, gas valve does not require 110 volts. Maximum length of 20 feet of 16 AWG to conductor wires is to be used with all optional switches.

Use the two leads (Red and Green) to attach optional components.

Check 750 Millivolt System Operation
Millivolt system and all individual components may be checked with a millivolt meter 0-1000 MV range.

Remote Receiver
Use the following steps to place the remote receiver adjacent to the gas valve.
Attention: The remote receiver bracket is not used in this installation.

1. The remote receiver can not be placed behind the gas valve and burner assembly.
2. When facing the appliance, the remote receiver must be placed to the right of the gas valve.

Install remote control receiver behind bottom louver.

Refer to remote control installation and operating instructions for more details on remote control.

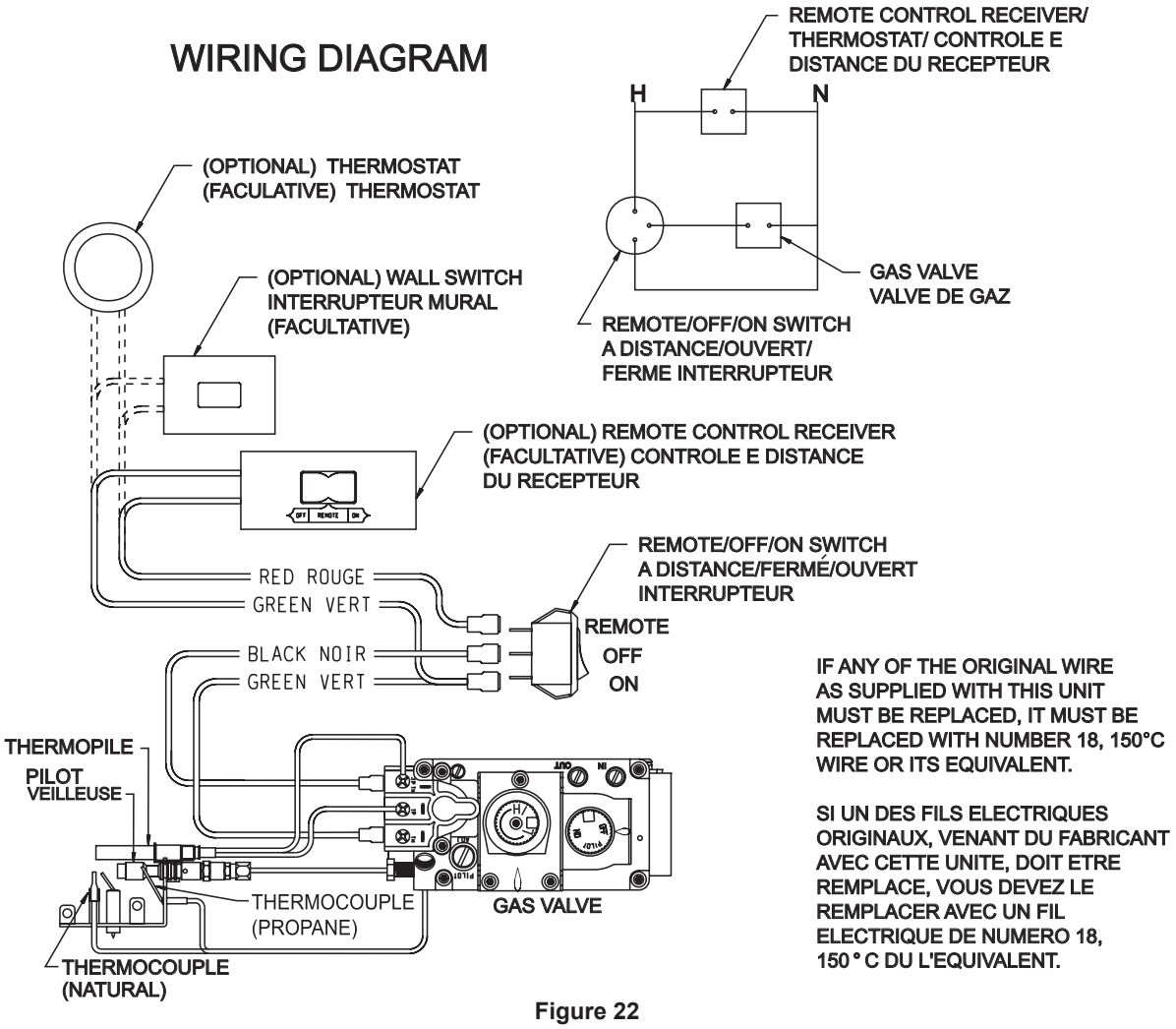

Figure 22

MILLIVOLT TROUBLESHOOTING
SYMPTOMS, POSSIBLE CAUSES AND CORRECTIONS

Turn appliance OFF and allow to cool before servicing. Only a qualified service person should service and repair the heater.

1. **When ignitor button is pressed, there is no spark at ODS/ pilot.**
   a. Ignitor electrode positioned wrong - Replace pilot.
   b. Ignitor electrode is broken - Replace pilot.
   c. Ignitor electrode not connected to ignitor cable - Reconnect ignitor cable.
   d. Ignitor cable pinched or wet. Keep ignitor cable dry - Free ignitor cable if pinched by any metal or tubing.
   e. Broken ignitor cable - Replace ignitor cable.
   f. Bad piezo ignitor - Replace piezo ignitor.
2. **Appliance produces unwanted odors.**
   a. Appliance burning vapors from paint, hair spray, glues, etc. - Ventilate room. Stop using odor causing products while heater is running.
   b. Gas leak - Locate and correct all leaks.
3. **Appliance shuts off during use. (Pilot and main burner are off.)**
   a. Not enough fresh air is available for ODS/pilot to operate - Open window and/or door for ventilation.
   b. Low line pressure - Contact local gas company.
   c. ODS/pilot is partially clogged - Clean ODS/pilot.
   d. Defective thermocouple - Replace pilot.
4. **Appliance shuts off during use. (Pilot stays on.)**
   a. Low line pressure - Check line pressure to the valve.
   b. Defective thermopile - Check pilot flame, check wire connections, output should be a minimum of 325 millivolts across. TH/TP and TP terminals with ON/OFF switch off.
5. **Gas odor even when control knob is in OFF position.**
   a. Gas leak - Locate and correct all leaks.
   b. Control valve defective - Replace control valve.
6. **When ignitor button is pressed, there is spark at ODS/ pilot, but no ignition.**
   a. Gas supply turned off or manual shutoff valve closed - Turn on gas supply or open manual shutoff valve.
   b. Control knob not in PILOT position - Turn control knob to PILOT position.
   c. Control knob not pressed in while in PILOT position - Press in control knob while in PILOT position.
   d. Air in gas lines when installed - Continue holding down control knob. Repeat igniting operation until air is removed.
   e. ODS/pilot is clogged - Replace ODS/pilot assembly or get it serviced.
   f. Gas regulator setting is not correct - Replace gas regulator.
7. **ODS/pilot lights but flame goes out when control knob is released.**
   a. Control knob not fully pressed in - Press in control knob fully.
   b. Control knob not pressed in long enough - After ODS/ pilot lights, keep control knob pressed in 30 seconds.
   c. Manual Shutoff valve not fully open - Fully open manual shutoff valve.
   d. Thermocouple connection loose at control valve - Hand tighten until snug, then tighten 1/4 turn more.
   e. Pilot flame not touching thermocouple, which allows thermocouple to cool, causing pilot flame to go out. This problem could be caused by either low gas pressure or dirty or partially clogged ODS/pilot - Contact local gas company.
   f. Thermocouple damaged - Replace thermocouple.
   g. Control valve damaged - Replace control valve.
8. **Burner does not light after ODS/pilot is lit.**
   a. Burner orifice clogged - Clean burner or replace main burner orifice.
   b. Burner orifice diameter is too small - Replace burner orifice.
   c. Inlet gas pressure is too low - Contact qualified service person.
9. **If burning at main burner orifice occurs (a loud, roaring blow torch noise).**
   a. You must turn off burner assembly and contact a qualified service person.
   b. Manifold pressure is too low - Contact local gas company.
   c. Burner orifice clogged - Clean burner or replace burner orifice.
10. **Logs appear to smoke after initial operation.**
    a. Vapors from paint or curing process of logs - Problem will stop after a few hours of operation. Run the heater with the damper open if you have one, or open a window for the first few hours.
    Log heater is intended to be smokeless. Turn OFF heater and call qualified service person.
11. **Heater produces a whistling noise when main burner is lit.**
    a. Turning control knob to HIGH position when main burner is cold - Turn control knob to LOW position and let warm up for a minute.
    b. Air in gas line - Operate burner until air is removed from line. Have gas line checked by local gas company.
    c. Dirty or partially clogged burner orifice - Clean burner or replace burner orifice.
12. **No gas to pilot.**
    a. Propane-regulator shut down due to inlet pressure too high - Verify Propane tank regulator is installed and set at 11" to 13" w.c. Replace regulator on heater.

If the gas quality is bad, your pilot may not stay lit, the burners may produce soot and the heater may backfire when lit. If the gas quality or pressure is low, contact your local gas supplier immediately.

INTERMITTENT PILOT LIGHTING INSTRUCTIONS

FOR YOUR SAFETY READ BEFORE LIGHTING

⚠ WARNING

If you do not follow these instructions exactly, a fire or explosion may result causing property damage, personal injury or loss of life.

A. This appliance has a pilot which must be lighted by hand. When lighting the pilot, follow these instructions exactly.

B. Before lighting smell all around the appliance area for gas. Be sure to smell next to the floor because some gas is heavier than air and will settle on the floor.

What To Do If You Smell Gas
- Do not try to light any appliance.
- Do not touch any electrical switch;
- Do not use any phone in your building.
- Immediately call your gas supplier from a neighbor's phone. Follow the gas supplier's instructions.
- If you cannot reach your gas supplier, call the fire department.

C. Use only your hand to push in or turn the gas control knob. Never use tools. If the knob will not push in or turn by hand, don't try to repair it; call a qualified service technician. Force or attempted repair may result in a fire or explosion.

D. Do not use this appliance if any part has been under water. Immediately call a qualified service technician to inspect the appliance and to replace any part of the control system and any gas control which has been under water.

LIGHTING INSTRUCTIONS

1. STOP! Read the safety information above.
2. Turn OFF electric power to the appliance.
3. Remove front surround panel assembly or bottom louver if included.
4. Turn gas shut-off counterclockwise ↺ to “On” position.
5. Wait ten minutes to clear out any gas. Then smell for gas, including near the floor. If you smell gas, STOP! Follow “B” in the safety information above on this page. If you do not smell gas, go to the next step.
6. Turn ON electric power to the appliance.
7. Find pilot - Follow metal tube from gas control. The pilot is behind the burner on the right side.
8. Turn main flame to on. If the pilot does not light within 60 seconds, stop and go to Step 5.
9. Refer to remote control instructions for detailed information, control features, and operation. Note: There is a CPI/IPI switch behind the right side panel that allows for a continuous standing pilot mode or an intermittent pilot mode. See appliance manual for location of this switch. If the pilot or burner does not stay lit (in the standing pilot mode), stop and immediately call a qualified service technician or gas supplier.
10. If the burner or pilot does not operate properly after several tries, turn the gas shut-off clockwise ↻ to “OFF” and call your service technician or gas supplier.
11. Replace the front surround assembly or close bottom louver assembly.
12. Operation of the gas valve is controlled by a manual on/off switch or a hand held remote control. Refer to remote instructions for detailed operation information.

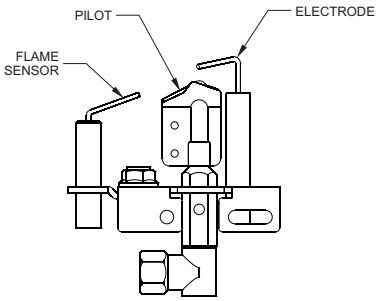

GAS SHUT-OFF VALVE

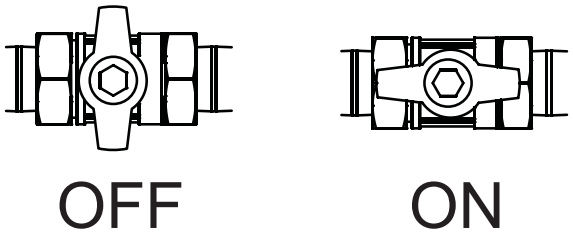

TO TURN OFF GAS TO FIREPLACE

1. Set REMOTE/OFF/ON switch to OFF.
2. Turn off all electric power to the appliance if service is to be performed (if applicable).
3. Lower bottom louver assembly.
4. Push in gas control knob slightly and turn clockwise ↻ to "OFF." Do not force.
5. Close bottom louver assembly.

INTERMITTENT CONTROL SYSTEM OPERATING INSTRUCTIONS

5.25 VDC ELECTRONIC CONTROL VALVE

The electronic control valve system includes the ability to switch the pilot from a standing pilot mode to an intermittent pilot mode.

- **IPI Mode** - In the Intermittent Pilot mode, when the unit is turned ON, it will cause spark to the pilot, light the pilot, then allow the burner to light. When the unit is turned to OFF, both the burner and pilot will be OFF.
- **CPI Mode** - In the Continuous Pilot mode, the pilot remains ON continuously even when the burner is turned OFF.

Note: A small toggle switch is located on a bracket that is used to switch from IPI (upward position) to the CPI (downward position). See Figure 38.

When the unit is turned to ON, the electrical current will energize a spark to the pilot igniter. Once the pilot sensor heats up (after a few seconds), the valve will be energized, allowing gas to flow to the burner.

1. Follow the SAFETY and LIGHTING INSTRUCTIONS for Intermittent Pilot controls found in this manual, and on labels found in the control compartment located in the lower cavity of the appliance.
2. During the operating season (or in power outage periods), it is recommended that the pilot remain in the CPI (standing pilot mode) to reduce cold start issues, and/or conserve battery backup power during a power outage.
3. The gas valve has inlet and outlet pressure taps as shown in Figure 23. Refer to page 8 for gas pressure requirements.

Note: The gas control has a manual HI/LO flame adjustment knob (regulator) that allows you to increase or decrease the height of the burner flame. See Figure 23. Rotate the HI/LO knob counterclockwise to “HI” to increase the flame height, and clockwise to “LO” to decrease the flame height.

OPTIONAL REMOTE CONTROLS

Optional remote controls are available for use with this appliance. To connect the remote receiver to the appliance, first disconnect the ON/OFF switch wires from the white and green wire connectors and connect the wires from the remote receiver to the green and white wire connectors. See Figure 23.

Follow the instructions included with the remote control for programming and other operational information.

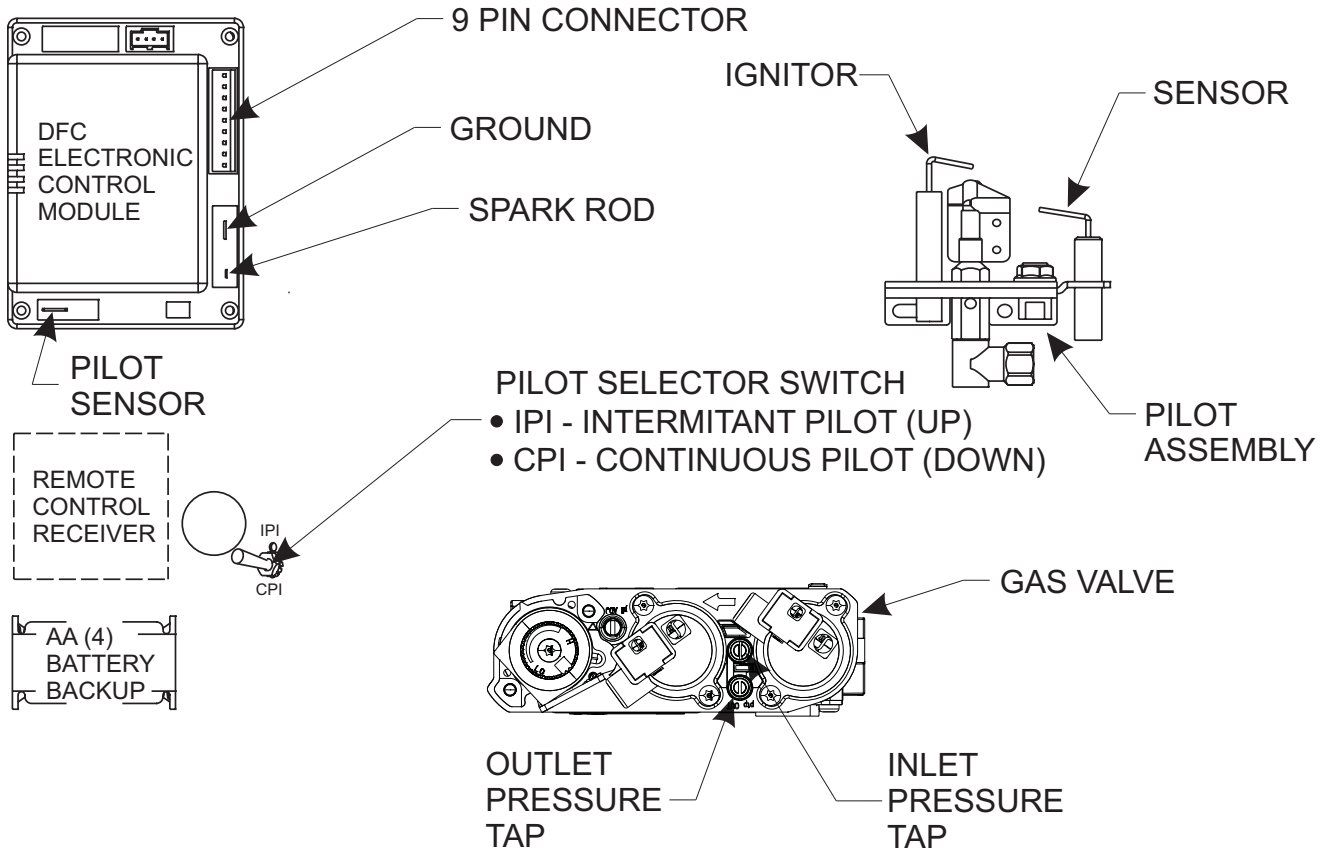

Figure 23

INTERMITTENT CONTROL SYSTEM WIRING DIAGRAM

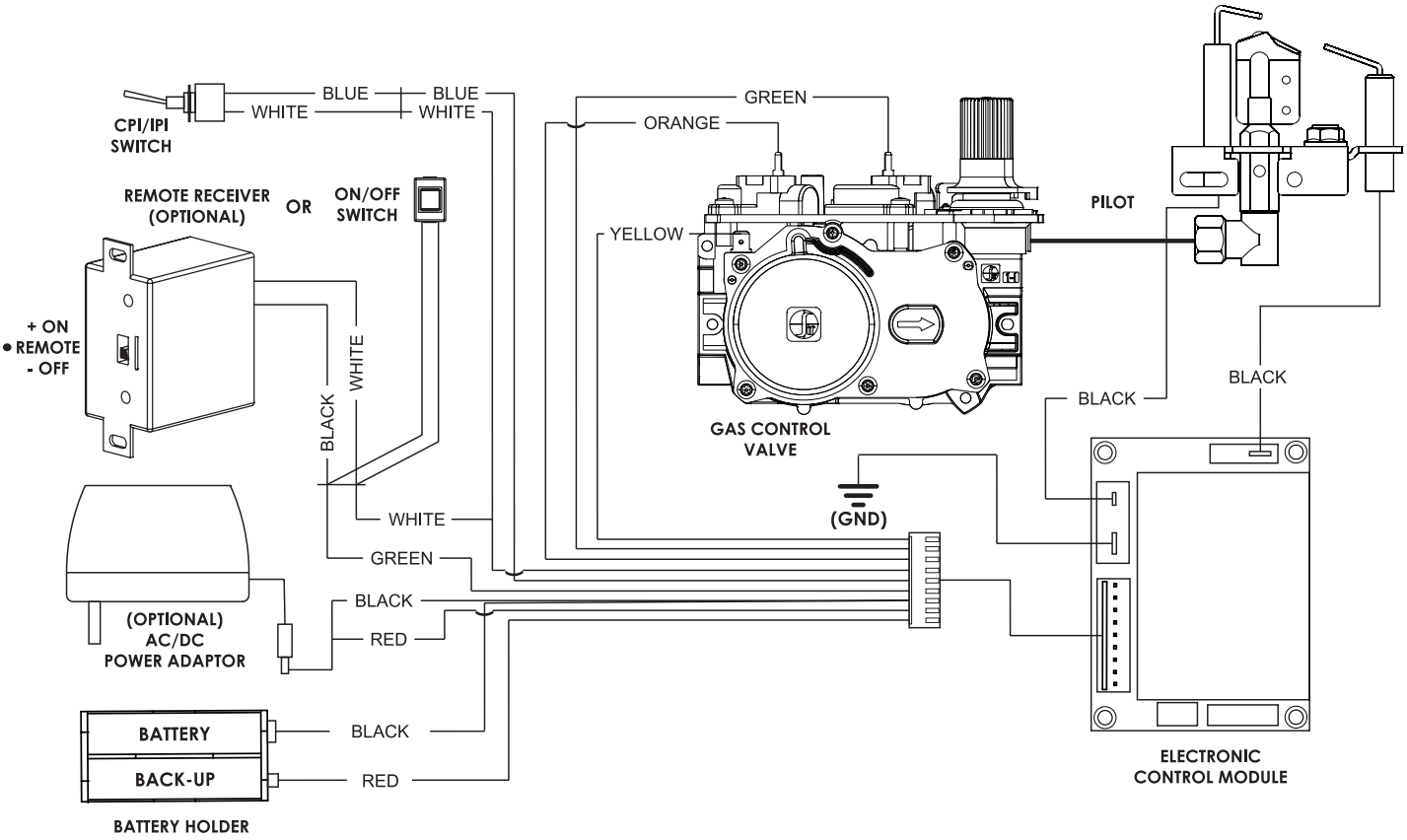

If any of the original wire as supplied with this unit must be replaced, it must be replaced with equivalent gauge and temperature rated wire.

This appliance is only for use with the type of gas indicated on the rating plate and may be installed in an aftermarket, permanently located, manufactured (mobile) home where not prohibited by local codes. This appliance is not convertible for use with other gases.

⚠ CAUTION

Do not operate the appliance with panel(s) removed, cracked or broken. Replacement of the panel(s) should be done by a licensed or qualified service person.

⚠ WARNING

Improper installation, adjustment, alteration, service or maintenance can cause property damage, personal injury or loss of life. Installation and service must be performed by a qualified installer, service agency or the gas supplier.

INTERMITTENT CONTROL SYSTEM TROUBLESHOOTING

Brief Description of the Components

The gas valve is equipped with a manual HI/LO knob to allow for manual modulation of the gas outlet pressure. The manual HI/LO knob can be replaced by an Empire Comfort Systems Variable Remote Kit.

⚠ WARNING

This appliance is equipped for Natural or Propane Gas. Field conversion is not permitted.

The Digital Fireplace Control (DFC) is an automatic gas ignition system based on a single microcontroller core. This control manages all functions related to ignition, flame sensing and supervision for atmospheric applications.

The DFC can be set to provide continuous or intermittent ignition control sequences and flame monitoring with safety shutdown in case of failure.

The DFC is set up as a stand alone (AC powered system with battery back up. See Lighting Instructions on page 26 and Wiring Diagram on page 28.

Troubleshooting

Before proceeding with the procedures in the following troubleshooting table, verify that the power supply (AC/DC adapter) is present and that the batteries inside the receiver and/or optional battery pack are fresh and installed with correct polarity.

Make sure all the connections between the wire harnesses and system components are proper and positive.

Verify that the static inlet pressure meets the manufacturer's recommended inlet pressure. If necessary adjust the line pressure regulator.

If the recommended actions for the following troubleshooting chart do not help to address the problem consider replacing wiring harnesses.

⚠ WARNING

Any actions performed on the gas valve must be performed in accordance with this instruction manual. Likewise, any actions performed on the DFC or other system components must be done in accordance with the individual component instructions.

Replacement of components must be performed in accordance with this instructions manual.

TROUBLESHOOTING

PROBLEM OBSERVED	POSSIBLE CAUSE	CORRECTIVE MEASURE
Gas odor during setup	Gas Leak	**What To Do If You Smell Gas** Do not try to light any appliance. Do not touch any electrical switch; Do not use any phone in your building. Immediately call your gas supplier from a neighbor's phone. Follow the gas supplier's instructions. If you cannot reach your gas supplier, call the fire department.
Gas odor before first ignition	Gas Leak	
Fireplace is on but no flame and pilot is not trying to light	Gas Line Valve turned off	Turn shutoff valve to open position
	Control module in lockout	Turn power to fireplace off and then back on
Pilot continues to spark when pilot is lit.	Not enough gas to pilot	Wait for pilot flame to strengthen
	Low Gas Pressure	Check pressures. See page 40.
	Pilot igniter/sensor is dirty	Clean pilot. See maintenance page 39.
	Pilot not grounded well	Check ground connections
	Draft in firebox	Redirect draft from room or wall
	Pilot sensor has been bent	Replace pilot
Pilot will not ignite, or will not stay lit	Pilot igniter/sensor is dirty	Clean flame sensor and pilot igniter. See maintenance page 39.
	Pilot not grounded well	Check ground connections
	Sensor Wire loose	Check sensor wire terminals
	Gas pressure incorrect	Adjust gas pressure
	Pilot Gas Line bent or kinked	Replace pilot tube
	Faulty pilot, Sensor bent	Replace Pilot
	Faulty valve	Replace Valve
Burner takes too long to fully light	Low gas pressure	Check gas supply pressure
	Clogged or dirty carryover/burner ports	Clean ports
	Blocked orifice	Check orifice opening
	Faulty valve	Replace valve
Burner does not light but pilot remains on	Low gas pressure	Check gas supply pressure
	Clogged or dirty burner ports	Clean burner ports
	Blocked orifice	Check orifice opening
	Loose wire connections	Check valve/control module connections
	Faulty pilot	Replace pilot
	Faulty valve	Replace valve
Burner lights but does not stay lit while pilot remains on	Low gas pressure	Check gas supply pressure
	Loose sensor wire	Check wire connection
	Faulty valve	Replace valve
	Faulty pilot or thermocouple	Replace Safety pilot
	Clogged or dirty burner ports	Clean burner ports
	Room temperature is higher than thermostat setting	Move remote away from fireplace
		Set higher temperature on remote/thermostat
	Remote control batteries failing	Replace batteries in remote transmitter and receiver

TROUBLESHOOTING

PROBLEM OBSERVED	POSSIBLE CAUSE	CORRECTIVE MEASURE
Burner & pilot light but will not stay lit	Flame sensor dirty	Clean pilot sensor
	Low gas pressure	Check gas supply pressure
	Not enough fresh air for pilot	Open door or window - ventilate
	Clogged or dirty burner ports	Clean burner ports
	(For fireplace equipped with optional thermostat or thermostat remote) Room temperature is higher than thermostat setting	Move (optional) remote away from fireplace
		Set higher temperature on (Optional) remote/ thermostat
	Remote control batteries failing	Replace batteries in remote transmitter and receiver
	Faulty pilot or thermocouple	Replace pilot
Incorrect burner flame	Incorrect gas supply or pressure	Check gas supply pressure
	Blocked orifice	Check orifice opening
	Clogged or dirty burner ports	Clean burner ports
	Faulty valve	Replace valve
	High altitude	Adjust orifice size for altitude
Backfire of burner	Blocked orifice	Check orifice opening
	Clogged or dirty burner ports	Clean burner ports
	Low gas pressure	Check gas supply pressure
Fireplace produces unwanted odors	Vapors from paint, hairspray, glue, etc.	Ventilate room until odor stops. Do not use paint, hairspray, glue, etc around fireplace
	Initial burn-off of manufacturing chemicals	Ventilate room until odor stops
Whistle noise from fireplace	Check gas pressure	Adjust gas pressure to recommended setting.
	Air in gas line	Bleed lines
	Control knob not in fully open position	Open control knob to full position
	Spiral gas flex line pinched or too small diameter line	Straighten flex line where pinched or replace gas feed line with larger diameter

PARTS LIST

ATTENTION: When ordering parts, it is very important that **part number** and **description** of part coincide.

INDEX NUMBER	PART NUMBER	DESCRIPTION
COMMON		
1	25897	TRIM - TOP
2	25895	TRIM - LEFT
3	25896	TRIM - RIGHT
4	10554	NAILING FLANGE
5	21642	BRICK LINER BRACKET - UPPER (2 REQUIRED)*
6	R6498	BRICK PANEL - REAR*
7	R6497	BRICK PANEL SIDE - LEFT*
8	R6499	BRICK PANEL SIDE - RIGHT*
9	19401	BRICK LINER BRACKET -LOWER (2 REQUIRED)*
10	25774	LOUVER ASSEMBLY - UPPER
11	25777	SCREEN ASSEMBLY (INCLUDES 12 & 13)
12	25779	BRACKET, SCREEN RETAINER (2 REQUIRED)
13	R10364	SCREEN, CURTAIN
14	25775	LOUVER ASSEMBLY - LOWER
15	25781	REAR LOG SUPPORT
16	12348	BURNER ASSEMBLY - PROPANE
16	12347	BURNER ASSEMBLY - NATURAL
17	11833	PILOT SHIELD - NATURAL ONLY
19	R5675	AIR SHUTTER - PROPANE
19	R5676	AIR SHUTTER - NATURAL
21	P-253	ORIFICE FITTING - ANGLED
22	25785	VALVE / REGULATOR BRACKET
NOT SHOWN	R5668	IGNITOR WIRE
NOT SHOWN	15998	ROCK WOOL
NOT SHOWN	P-251	COUPLING (NATURAL ONLY)

* Brick Panels are an optional accessory and not required for use with fireplace.

INDEX NUMBER	PART NUMBER	DESCRIPTION
VFP24FP30L and VFP24FP30L10		
18	R3623	PILOT ASSEMBLY - PROPANE
18	R3624	PILOT ASSEMBLY - NATURAL
20	P-214	ORIFICE - NATURAL (10,000 BTU)
20	P-181	ORIFICE - NATURAL (20,000 BTU)
20	P-193	ORIFICE - PROPANE (10,000 BTU)
20	P-182	ORIFICE - PROPANE (20,000 BTU)
23	R3626	VALVE - NATURAL (20,000 BTU)
23	R3625	VALVE - PROPANE (20,000 BTU)
23	R9368	VALVE - NATURAL (10,000 BTU)
23	R9369	VALVE - PROPANE (10,000 BTU)
24	R2423	MALE ADAPTOR
25	25787	TUBING (VALVE TO BURNER)
26	25805	TUBING (VALVE TO PILOT) - PROPANE
26	25788	TUBING (VALVE TO PILOT REGULATOR) - NATURAL ONLY
27	R7063	PILOT REGULATOR - NATURAL ONLY
28	25789	TUBING (PILOT REGULATOR TO PILOT) - NATURAL ONLY
29	P-263	NIPPLE 8 INCH
32	25786	VALVE COVER PLATE
33	R2708	PIEZO IGNITOR
34	R3436	REMOTE/OFF/ON SWITCH
NOT SHOWN	R10947	SWITCH WIRE HARNESS
VFP24FP20L		
18	R5170	PILOT ASSEMBLY - PROPANE
18	R5171	PILOT ASSEMBLY - NATURAL
20	P-265	ORIFICE - NATURAL (20,000 BTU)
20	P-182	ORIFICE - PROPANE (20,000 BTU)
23	26012	VALVE - NATURAL
23	24157	VALVE - PROPANE
25	24156	TUBING (VALVE TO BURNER)
26	24153	TUBING (VALVE TO PILOT, NATURAL)
26	24154	TUBING (VALVE TO PILOT, PROPANE)
29	P-264	NIPPLE 5 INCH
30	R2480	INLET REGULATOR - PROPANE
30	R2479	INLET REGULATOR - NATURAL
31	24155	TUBING (REGULATOR TO VALVE)
32	25806	VALVE COVER PLATE
33	R2708	PIEZO IGNITOR
NOT SHOWN	R1720	PLASTIC CLIP

USE ONLY MANUFACTURER'S REPLACEMENT PARTS. USE OF ANY OTHER PARTS COULD CAUSE INJURY OR DEATH.

PARTS LIST

ATTENTION: When ordering parts, it is very important that **part number** and **description** of part coincide.

INDEX NUMBER	PART NUMBER	DESCRIPTION
VFP24FP70L		
18	R11328 2019	PILOT ASSEMBLY, NATURAL
18	R11327 2019	PILOT ASSEMBLY, PROPANE
19	R5676	AIR SHUTTER - NATURAL
19	R5675	AIR SHUTTER - PROPANE
20	P181	ORIFICE #43 - VFP24FP70LN
20	P182	ORIFICE #55 - VFP24FP70LP
21	P253	FITTING, ORIFICE ANGLED
22	29878	VALVE BRACKET
23	R11125	VALVE, NATURAL
23	R11126	VALVE, PROPANE
24	R6207	ELBOW, 5/16 X 3/8 90 DEGREE
25	29821	TUBING ASSEMBLY, INLET
26	31364	TUBING ASSEMBLY, PILOT - PRO-PANE
26	29823	TUBING ASSEMBLY, PILOT TO VALVE - NATURAL
27	R7063	REGULATOR - NATURAL ONLY
28	31363	TUBING ASSEMBLY, REGULATOR TO PILOT - NATURAL
34	R2522	SWITCH, ON/OFF
35	29699	BRACKET, ON/OFF SWITCH
36	R11127	CONTROL BOARD
N/A	R11128	POWER ADAPTOR

INDEX NUMBER	PART NUMBER	DESCRIPTION
VFP24FP70L10		
18	R11328 2019	PILOT ASSEMBLY, NATURAL
18	R11327 2019	PILOT ASSEMBLY, PROPANE
19	R5676	AIR SHUTTER - NATURAL
19	R5675	AIR SHUTTER - PROPANE
20	P214	ORIFICE #53 - VFP24FP70L10N
20	P193	ORIFICE #64 - VFP24FP70L10P
21	P253	FITTING, ORIFICE ANGLED
22	29878	VALVE BRACKET
23	R11210	VALVE, NATURAL
23	R11211	VALVE, PROPANE
24	R6207	ELBOW, 5/16 X 3/8 90 DEGREE
25	29821	TUBING ASSEMBLY, INLET
26	33796	TUBING ASSEMBLY PILOT - PROPANE
26	29823	TUBING ASSEMBLY, PILOT TO VALVE - NATURAL
27	R7063	REGULATOR - NATURAL ONLY
28	33795	TUBING ASSEMBLY PILOT REGULATOR TO PILOT - NATURAL
34	R2522	SWITCH, ON/OFF
35	29699	BRACKET, ON/OFF SWITCH
36	R11127	CONTROL BOARD
N/A	R11128	POWER ADAPTOR

PARTS VIEW

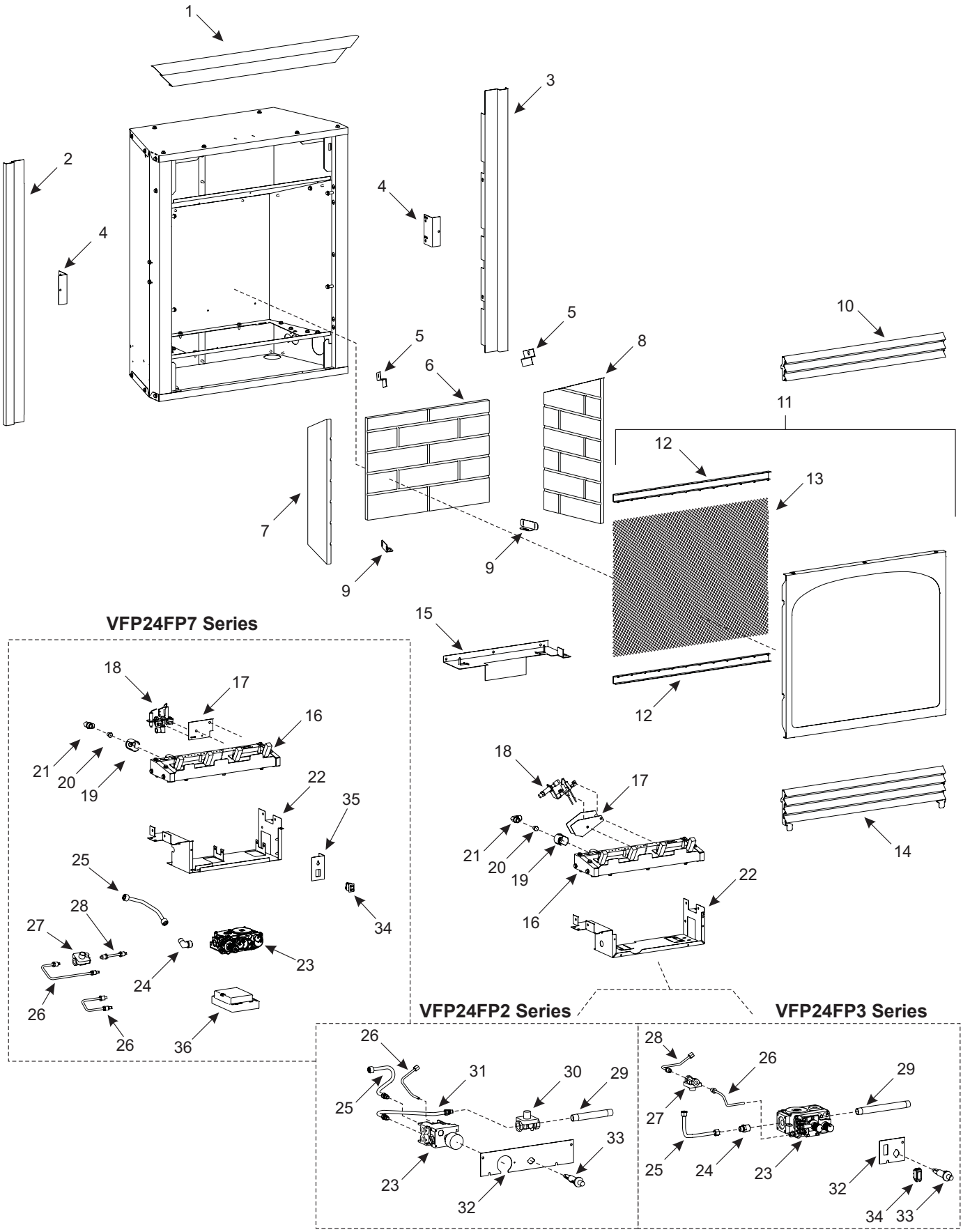
1
2
3
4
4
5
5
6
7
8
9
9
10
11
12
12
13
14
15
VFP24FP7 Series
16
17
18
19
20
21
22
23
24
25
26
26
26
27
28
34
35
36
VFP24FP2 Series
23
25
26
29
30
31
32
33
VFP24FP3 Series
23
24
25
26
27
28
29
32
33
34

PERIODIC CLEANING – Refer to parts diagram for location of items discussed below.

- Do not use cleaning fluid to clean logs or any part of heater.
- Logs - brush with soft bristle brush or vacuum with brush attachment.
- Remove loose particles and dust from the burner areas, controls, piezo covers and grate. Don't remove ceramic media from inside burner box.
- Inspect and clean burner air intake hole. Remove lint or particles with brush. Failure to keep air intake hole clean will result in sooting and poor combustion.

ANNUAL CLEANING/INSPECTION – Refer to parts diagram for location of items discussed below.

- Inspect and clean burner air intake hole. Remove lint or particles with vacuum or brush. Failure to keep air intake hole clean will result in sooting and poor combustion.
- Inspect and clean all burner ports.
- Inspect ODS pilot for operation and accumulation of lint at air intake holes.
- Verify flame pattern and log placement for proper operation.
- Verify smooth and responsive ignition of main burner.
- Check level of ceramic media in burner. Burner should be full, up to the level of openings in burner top.

CLEANING AND PILOT MAINTENANCE

Oxygen Depletion Sensor Pilot

When the pilot has a large yellow tip flame, clean the Oxygen Depletion Sensor as follows:

1. Clean the ODS pilot by loosening nut B from the pilot tubing. When this procedure is required, grasp nut A with an open end wrench.
2. Blow air pressure through the holes indicated by the arrows. This will blow out foreign materials such as dust, lint and spider webs. Tighten nut B also by grasping nut A.

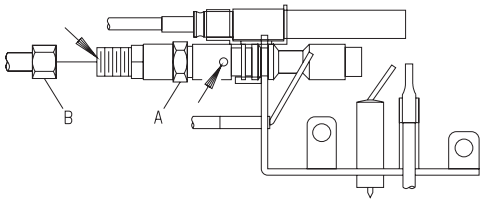

Millivolt Pilot
Figure 19

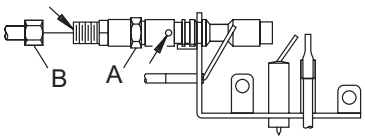

Hydraulic Thermostat Pilot
Figure 20

3. If intermittent pilot unit stops working, clean flame sensor **Figure 21** with a damp cloth.
4. If intermittent pilot ignitor does not spark, clean ignitor sensor **Figure 21** with a damp cloth.

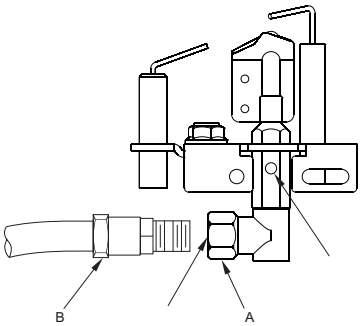

Intermittent Pilot
Figure 21

⚠ WARNING

Never use needles, wires, or similar cylindrical objects to clean the pilot to avoid damaging the calibrated ruby that controls the gas flow.

Cleaning and Maintenance / Main Burner

⚠ WARNING

Turn off heater and let cool before cleaning.

⚠ CAUTION

You must keep control areas, burner and circulating air passageways of heater clean. Inspect these areas of heater before each use. Have heater inspected yearly by a qualified service person. Heater may need more frequent cleaning due to excessive lint from carpeting, bedding materials, etc.

Logs

Be careful cleaning and handling logs so as not to damage them. If logs break or fall apart in handling, spray the broken pieces and fibers with water, sweep up and discard.

IMPORTANT SAFETY INFORMATION

THIS IS A HEATING APPLIANCE

⚠ **DANGER**: Indicates a hazardous situation which, if not avoided, will result in death or serious injury.

⚠ **WARNING**: Indicates a hazardous situation which, if not avoided, could result in death or serious injury.

⚠ **CAUTION**: Indicates a hazardous situation which, if not avoided, could result in minor or moderate injury.

NOTICE: Addresses practices not related to personal injury.

- **An unvented room heater having an input rating of more than 6,000 Btu per hour shall not be installed in a bathroom**
- **An unvented room heater having an input rating of more than 10,000 Btu per hour shall not be installed in a bedroom or bathroom.**
- **Due to high temperatures, the appliance should be located out of traffic and away from furniture and draperies.**
- **Children and adults should be alerted to the hazard of high surface temperature and should stay away to avoid burns or clothing ignition.**
- **Young children should be carefully supervised when they are in the same room with the appliance.**
- **Do not place clothing or other flammable material on or near the appliance.**
- **Avoid the use of scented air fresheners (plug in type air fresheners, etc.) while the log set is in operation. Air fresheners produce a residue in the air similar to candles and may produce a soot like substance.**
- **Avoid the use of scented or decorative candles while the log set is in operation. Candles produce a residue in the air that creates a soot like substance. Burning candles while the log set is operating magnifies the problem. It should be noted that candles, in general, produce soot. The amount of time burned and the quantity of candles burned will determine the amount of soot produced and deposited.**
- **Installation and repair should be done by a QUALIFIED SERVICE PERSON. This appliance should be inspected before use and at least annually by a professional service person. More frequent cleaning may be required due to excessive lint from carpeting, bedding materials, etc. It is imperative that control compartments, burners and circulating air passageways of the appliance be kept clean.**
- **DO NOT use this room heater if any part has been under water. Immediately call a qualified service technician to inspect the room heater and to replace any part of the control system and any gas control which has been under water.**
- **You must operate heater with fireplace screen in place.**
- **Do not place trash, logs or other articles on the log set during operation.**
- **During manufacturing, fabricating and shipping, various components of this appliance are treated with certain oils, films or bonding agents. These bonding agents are not harmful but may produce annoying smoke and smells as they are burned off during initial operation of the appliance. This is a normal temporary occurrence. A window should be opened during the initial bake out period.**
- **Correct installation of the ceramic fiber logs, proper location of the heater and annual cleaning are necessary to avoid potential problems with sooting. Sooting, resulting from improper installation or operation, can settle on surfaces outside the fireplace. See instructions for proper installation.**
- ⚠ **WARNING: Do not allow fans to blow directly into the fireplace. Avoid any drafts that alter burner flame patterns.**
- ⚠ **WARNING: Do not use a blower insert, heat exchanger insert or other accessory not approved for use with this heater.**
- ⚠ **WARNING! This fireplace needs fresh air for ventilation to run properly. This fireplace has an ODS (oxygen depletion sensor) which will shut down the heater if adequate fresh air is not available. See troubleshooting section in the instructions.**
- ⚠ **WARNING: DO NOT operate this appliance unless all components including logs, burners, and controls are in good working condition. Never operate this appliance if any log or twig is broken, or out of their intended position. Refer to the Log set placement instructions for correct log and twig positioning.**
  Replacement components are available through your local dealer as indicated in the How to Order Repair Parts section of the appliance manual.
- **Keep appliance area clear and free from combustible materials, gasoline and other flammable vapors and liquids.**
- ⚠ **WARNING: Failure to keep the primary air opening(s) of the burner(s) clean may result in sooting and property damage.**

⚠ WARNING

When used without adequate combustion and ventilation air, heater may give off CARBON MONOXIDE, an odorless, poisonous gas.

Do not install heater until all necessary provisions are made for combustion and ventilation air. Consult the written instructions provided with the heater for information concerning combustion and ventilation air. In the absence of instructions, refer to the National Fuel Gas Code, ANSI Z223.1/NFPA 54, Air for Combustion and Ventilation, or applicable local codes.

This heater is equipped with a PILOT LIGHT SAFETY SYSTEM designed to turn off the heater if not enough fresh air is available.

DO NOT TAMPER WITH PILOT LIGHT SAFETY SYSTEM!

If heater shuts off, do not relight until you provide fresh air.

If heater keeps shutting off, have it serviced. Keep burner and control compartment clean.

CARBON MONOXIDE POISONING MAY LEAD TO DEATH.

Early signs of carbon monoxide poisoning resemble the flu, with headache, dizziness and/or nausea. If you have these signs, heater may not be working properly. Get fresh air at once! Have heater serviced.

Some people — pregnant women, persons with heart or lung disease, anemia, those under the influence of alcohol , those at high altitudes — are more affected by carbon monoxide than others.

The pilot light safety system senses the depletion of oxygen at its location. If this heater is installed in a structure having a high vertical dimension, the possibility exists that the oxygen supply at the higher levels will be less than that at the heater. In this type of application, a fan to circulate the structure air will minimize this effect. The use of this fan will also improve the comfort level in the structure. When a fan is used to circulate air, it should be located so that the air flow is not directed at the burner.

SAFETY INFORMATION FOR USERS OF PROPANE GAS

Propane is a flammable gas which can cause fires and explosions. In its natural state, propane is odorless and colorless. You may not know all the following safety precautions which can protect both you and your family from an accident. Read them carefully now, then review them point by point with the members of your household. Someday when there may not be a minute to lose, everyone's safety will depend on knowing exactly what to do. If, after reading the following information, you feel you still need more information, please contact your gas supplier.

PROPANE GAS WARNING ODOR

If a gas leak happens, you should be able to smell the gas because of the odorant put in the Propane Gas. That's your signal to go into immediate action!

- Do not operate electric switches, light matches, use your phone. Do not do anything that could ignite the gas.
- Get everyone out of the building, vehicle, trailer, or area. Do that IMMEDIATELY.
- Close all gas tank or cylinder supply valves.
- Propane Gas is heavier than air and may settle in low areas such as basements. When you have reason to suspect a gas leak, keep out of basements and other low areas. Stay out until firefighters declare them to be safe.
- Use your neighbor's phone and call a trained Propane Gas service person and the fire department. Even though you may not continue to smell gas, do not turn on the gas again. Do not re-enter the building, vehicle, trailer, or area.
- **Finally,** let the service man and firefighters check for escaped gas. Have them air out the area before you return. Properly trained Propane Gas service people should repair the leak, then check and relight the gas appliance for you.

NO ODOR DETECTED - ODOR FADE

Some people cannot smell well. Some people cannot smell the odor of the chemical put into the gas. You must find out if you can smell the odorant in propane. Smoking can decrease your ability to smell. Being around an odor for a time can affect your sensitivity or ability to detect that odor. Sometimes other odors in the area mask the gas odor. People may not smell the gas odor or their minds are on something else. Thinking about smelling a gas odor can make it easier to smell.

The odorant in Propane Gas is colorless, and it can fade under some circumstances. For example, if there is an underground leak, the movement of the gas through soil can filter the odorant. Odorants in Propane Gas also are subject to oxidation. This fading can occur if there is rust inside the storage tank or in iron gas pipes.

The odorant in escaped gas can adsorb or absorb onto or into walls, masonry and other materials and fabrics in a room. That will take some of the odorant out of the gas, reducing its odor intensity.

Propane Gas may stratify in a closed area, and the odor intensity could vary at different levels. Since it is heavier than air, there may be more odor at lower levels. Always be sensitive to the slightest gas odor. If you detect any odor, treat it as a serious leak. Immediately go into action as instructed earlier.

SOME POINTS TO REMEMBER

- Learn to recognize the odor of Propane Gas. Your local Propane Gas Dealer can give you a "Scratch and Sniff" pamphlet. Use it to find out what the propane odor smells like. If you suspect that your Propane Gas has a weak or abnormal odor, call your Propane Gas Dealer.
- If you are not qualified, do not light pilot lights, perform service, or make adjustments to appliances on the Propane Gas system. If you are qualified, consciously think about the odor of Propane Gas prior to and while lighting pilot lights or performing service or making adjustments.
- Sometimes a basement or a closed-up house has a musty smell that can cover up the Propane Gas odor. Do not try to light pilot lights, perform service, or make adjustments in an area where the conditions are such that you may not detect the odor if there has been a leak of Propane Gas.
- Odor fade, due to oxidation by rust or adsorption on walls of new cylinders and tanks, is possible. Therefore, people should be particularly alert and careful when new tanks or cylinders are placed in service. Odor fade can occur in new tanks, or reinstalled old tanks, if they are filled and allowed to set too long before refilling. Cylinders and tanks which have been out of service for a time may develop internal rust which will cause odor fade. If such conditions are suspected to exist, a periodic sniff test of the gas is advisable. **If you have any question about the gas odor, call your Propane Gas Dealer. A periodic sniff test of the Propane Gas is a good safety measure under any condition.**
- If, at any time, you do not smell the Propane Gas odorant and you think you should, assume you have a leak. Then take the same immediate action recommended above for the occasion when you do detect the odorized Propane Gas.
- If you experience a complete "gas out," (the container is under no vapor pressure), turn the tank valve off immediately. If the container valve is left on, the container may draw in some air through openings such as pilot light orifices. If this occurs, some new internal rusting could occur. If the valve is left open, then treat the container as a new tank. Always be sure your container is under vapor pressure by turning it off at the container before it goes completely empty or having it refilled before it is completely empty.

MASTER PARTS DISTRIBUTOR LIST

To Order Parts Under Warranty, please contact your local Empire dealer. See the dealer locator at www.empirecomfort.com. To provide warranty service, your dealer will need your name and address, purchase date and serial number, and the nature of the problem with the unit.

To Order Parts After the Warranty Period, please contact your dealer or one of the Master Parts Distributors listed below. This list changes from time to time. For the current list, please click on the Master Parts button at www.empirecomfort.com. Please note: Master Parts Distributors are independent businesses that stock the most commonly ordered Original Equipment repair parts for Heaters, Grills, and Fireplaces manufactured by Empire Comfort Systems Inc.

Dey Distributing
1401 Willow Lake Boulevard
Vadnais Heights, MN 55101

Phone: 651-490-9191
Toll Free: 800-397-1339
Website: www.deydistributing.com
Parts: Heater, Hearth and Grills

F. W. Webb Company
200 Locust Street
Hartford, CT 06114

Phone: 860-722-2433
Toll Free: 800-243-9360
Fax: 860-293-0479
Toll Free Fax: 800-274-2004
Websites: www.fwwebb.com & www.victormfg.com
Parts: Heater, Hearth and Grills

East Coast Energy Products
10 East Route 36
West Long Branch, NJ 07764

Phone: 732-870-8809
Toll Free: 800-755-8809
Fax: 732-870-8811
Website: www.eastcoastenergy.com
Parts: Heater, Hearth and Grills

HOW TO ORDER REPAIR PARTS

Parts Not Under Warranty

Parts can be ordered through your Service Person, Dealer, or a Master Parts Distributor. See this page for the Master Parts Distributors list. For best results, the **service person or dealer** should order parts through the distributor. Parts can be shipped directly to the **service person/dealer**.

Warranty Parts

Warranty parts will need a proof of purchase and can be ordered by your Service Person or Dealer. Proof of purchase is **required** for warranty parts.

All parts listed in the Parts List have a Part Number. When ordering parts, first obtain the Model Number and Serial Number from the name plate on your equipment. Then determine the Part Number (**not** the Index Number) and the Description of each part from the following illustration and part list. Be sure to give all this information . . .

Appliance Model Number _____ Part Description _____

Appliance Serial Number _____ Part Number _____

Type of Gas (Propane or Natural) _____

Do not order bolts, screws, washers or nuts. They are standard hardware items and can be purchased at any local hardware store.

Shipments contingent upon strikes, fires and all causes beyond our control.

WARRANTY

Empire Comfort Systems Inc. warranties this hearth product to be free from defects at the time of purchase and for the periods specified below. Hearth products must be installed by a qualified technician and must be maintained and operated safely, in accordance with the instructions in the owner's manual. This warranty applies to the original purchaser only and is not transferable. All warranty repairs must be accomplished by a qualified gas appliance technician.

Limited Lifetime Parts Warranty with a Five-Year Limited Labor Warranty – Combustion Chamber and Heat Exchanger

If the combustion chamber or heat exchanger (see parts list) fails because of defective workmanship or material, Empire will repair or replace at Empire's option. Within five years from the date of purchase, Empire will pay reasonable labor to have the defective part repaired or replaced at Empire's option.

Limited Five-Year Parts & Labor Warranty – All Other Components
(Except Remote Controls, Thermostats, Accessories and Replacement Parts)

Should any part fail because of defective workmanship or material within five years from the date of purchase, Empire will repair or replace at Empire's option. Within five years from the date of purchase, Empire will pay reasonable labor to have that defect repaired at Empire's option.

Limited One-Year Parts Warranty – Remote Controls, Thermostats, Accessories, and Parts

Should any remote control, thermostat, accessory, or other part fail because of defective workmanship within one year from the date of purchase, Empire will repair or replace at Empire's option.

Duties Of The Owner

The appliance must be installed by a qualified installer and operated in accordance with the instructions furnished with the appliance. A bill of sale, cancelled check, or payment record should be kept to verify purchase date and establish warranty period. Ready access to the appliance for service.

What Is Not Covered

Damages that might result from the use, misuse, or improper installation of this appliance.
Travel, diagnostic costs and freight charges on warranted parts to and from the factory.
Claims that do not involve defective workmanship or materials.
Unauthorized service or parts replacements.
Removal and reinstallation cost.
Inoperable due to improper or lack of maintenance.

How To Get Service

To make a claim under this warranty, please have your receipt available and contact your installing dealer. Provide the dealer with the model number, serial number, type of gas, and purchase verification. The installing dealer is responsible for providing service and will contact the factory to initiate any warranted parts replacements. Empire will make replacement parts available at the factory. Shipping expenses are not covered.
If, after contacting your Empire dealer, service received has not been satisfactory, contact: Consumer Relations Department, Empire Comfort Systems Inc., PO Box 529, Belleville, Illinois 62222, or send an e-mail to info@empirecomfort.com with "Consumer Relations" in the subject line.

Your Rights Under State Law

This warranty gives your specific legal rights, and you may also have other rights, which vary from state to state.

WHITE MOUNTAIN HEARTH®
by Empire Comfort Systems

Empire Comfort Systems Inc.
Belleville, Illinois

If you have a general question about our products, please e-mail us at info@empirecomfort.com.

If you have a service or repair question, please contact your dealer.

www.empirecomfort.com