This Owner's Manual is provided and hosted by Appliance Factory Parts.

Appliance Factory Parts
Experts in BBQ, Humidifier, & Appliance Parts
1-800-955-7075

# COMFORT-AIRE B-VMH18SU-1B Owner's Manual

Shop genuine replacement parts for COMFORT-AIRE B-VMH18SU-1B

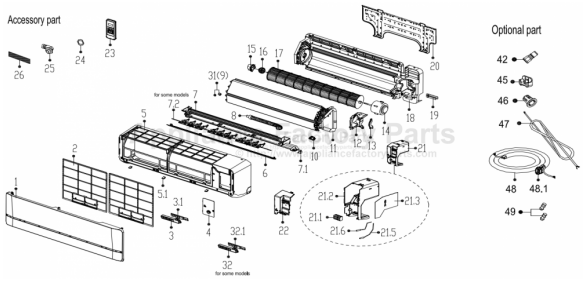


Find Your COMFORT-AIRE HVAC Parts - Select From 1486 Models

-------- Manual continues below --------

REPLACEMENT PARTS LIST

# Single Zone Low Temperature Ductless Mini-Split

B-VMH18SU-1B

# EXPLODED VIEW

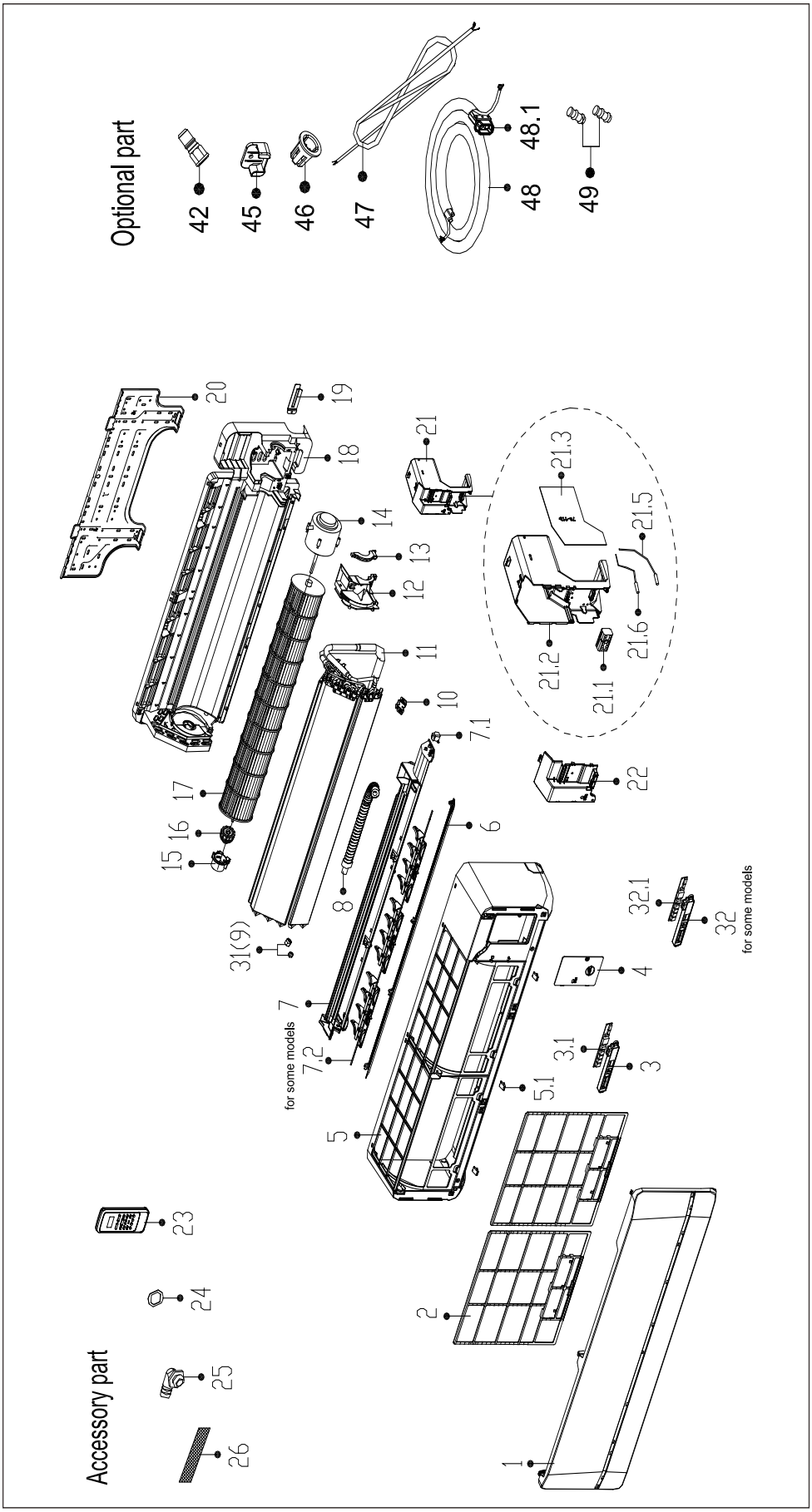

# REPLACEMENT PARTS

| Location | Part Name | Quantity | Part No. |
|---|---|---|---|
| 1 | Panel assembly | 1 | 12122000A46918 |
| 2 | Air filter | 2 | 12100204000400 |
| 3 | Display box subassembly | 1 | 17222000A54734 |
| 3.1 | Display board subassembly | 1 | 17122000A34876 |
| 4 | Cover of electrical equipment | 1 | 12122000006693 |
| 5 | Panel frame assembly | 1 | 12122000001746 |
| 5.1 | Screw Cap | 3 | 12122000006272 |
| 6 | Horizontal louver | 1 | 12122000005707 |
| 7 | Air outlet assembly | 1 | 12122000008962 |
| 7.1 | Stepper motor | 1 | 11002010000015 |
| 7.2 | Horizontal louver | 3 | 12122000008276 |
| 8 | Drain hose | 1 | 12100501000021 |
| 9 | Copper nut | 1 | 15500406000016 |
| 9 | Copper nut | 1 | 15500406000012 |
| 10 | Fixed clamp of temperature sensor | 1 | 12122000024323 |
| 11 | Evaporator assembly | 1 | 15822000008156 |
| 12 | Fan motor cover | 1 | 12122000005516 |
| 13 | Fixing board of fan motor | 1 | 12122000006772 |
| 14 | Brushless DC Motor | 1 | 11002015008646 |
| 15 | Bearing holder | 1 | 12122000000350 |
| 16 | Bearing base | 1 | 12622000000006 |
| 17 | Cross flow fan | 1 | 12100102000007 |
| 18 | Chassis Assembly | 1 | 12122000A08689 |
| 19 | pipe clamp board | 1 | 12222000000054 |
| 20 | Installation Plate | 1 | 12222000000020 |
| 21 | Electronic control box subassembly (Mid-and low-end) | 1 | 17222000033802 |
| 21.1 | Wire joint | 1 | 17400401A00046 |
| 21.2 | Electronic control box | 1 | 12122000004609 |
| 21.3 | Main control board subassembly | 1 | 17122000044851 |
| 21.5 | Room temperature sensor | 1 | 11201007003425 |
| 21.6 | Pipe Temperature Sensor | 1 | 11201007003445 |
| 22 | Cover of electronic control box | 1 | 12122000005029 |
| 23 | Remote controller | 1 | 17317000A51872 |
| 24 | seal ring | 1 | 12600701000039 |
| 25 | Drain hose | 1 | 12100509000061 |
| 26 | Air freshening filter | 2 | 12100206000056 |
| 32 | Display box subassembly | 1 | 17222000A01170 |
| 32.1 | Adapter plate subassembly | 1 | 17122000046739 |
| 42 | Check valve | 1 | 15500209000001 |
| 45 | Bracket of remote Controller | 1 | 12122000027147 |

Due to ongoing product improvements, specifications and dimensions are subject to change and correction without notice or incurring obligations. Determining the application and suitability for use of any product is the responsibility of the installer. Additionally, the installer is responsible for verifying dimensional data on the actual product prior to beginning any installation preparations.

Incentive and rebate programs have precise requirements as to product performance and certification. All products meet applicable regulations in effect on date of manufacture; however, certifications are not necessarily granted for the life of a product. Therefore, it is the responsibility of the applicant to determine whether a specific model qualifies for these incentive/rebate programs.

1900 Wellworth Ave., Jackson, MI 49203 • Ph. 517-787-2100 • www.marsdelivers.com

11/2020