This Owner's Manual is provided and hosted by Appliance Factory Parts.

Appliance Factory Parts
Experts in BBQ, Humidifier, & Appliance Parts
1-800-955-7075

# Black & Decker WW100 Owner's Manual

Shop genuine replacement parts for Black & Decker WW100

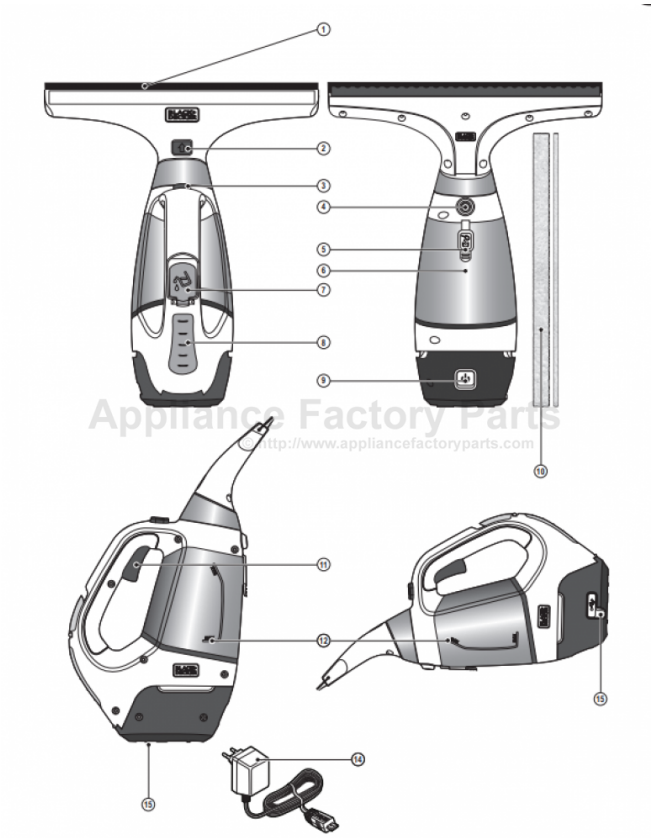


Find Your Black & Decker Vacuum Cleaner Parts - Select From 339 Models

-------- Manual continues below --------

BLACK+ DECKER™

www.blackanddecker.com.au
www.blackanddecker.co.nz

# WW100

Downloaded from www.Manualslib.com manuals search engine

**Intended use**

Your BLACK+DECKER™ WW100 Window Washer has been designed for washing windows and wet vacuum cleaning purposes

# Safety instructions

## General power tool safety warnings

**Warning! Read all safety warnings and all instructions.** Failure to follow the warnings and instructions listed below may result in electric shock, fire and/or serious injury.
**Warning!** When using battery powered appliances, basic safety precautions, including the following should always be followed to reduce risk of fire, leaking batteries, personal injury and material damage.

- Read all of this manual carefully before using the appliance.
- The intended use is described in this manual. The use of any accessory or attachment or the performance of any operation with this appliance other than those recomended in this instruction manual may present a risk of personal injury.
- Retain this manual for future reference.

## Using your appliance

- Do not use the appliance to pick up flammable liquids or any materials that could catch fire.
- Never pull the charger lead to disconnect the charger from the socket. Keep the charger lead away from heat, oil and sharp edges.
- This appliance is not intended for use by young or infirm persons without supervision.

Children must be supervised to ensure they do not play with the appliance.

## After use

- Unplug the charger before cleaning the charger or charging base.
- When not in use, the appliance should be stored in a dry place.
- Children should not have access to stored appliances.

### Inspection and repairs

- Before use, check the appliance for damaged or defective parts. Check for breakage of parts, damage to switches and any other conditions that may affect its operation.
- Do not use the appliance if any part is damaged or defective.
- Have any damaged or defective parts repaired or replaced by an authorised repair agent.
- Regularly check the charger lead for damage. replace the charger if the lead is damaged or defective.
- Never attempt to remove or replace any parts other than those specified in this manual.

### Additional safety instructions - batteries and chargers.

### Batteries

- Never attempt to open for any reason.
- Do not expose the battery to water.
- Do not expose the battery to heat.
- Do not store in locations where the temperature may exceed 40˚C.
- Charge only at ambient temperatures between 10˚C and 40˚C.
- Charge only using the charger provided with the appliance/tool. Using the wrong charger could result in an electric shock or overheating of the battery.



Downloaded from www.Manualslib.com manuals search engine

- When disposing of batteries, follow the instructions given in the section "Protecting the environment".
- Do not damage/deform the battery pack either by puncture or impact, as this may create a risk of injury and fire.
- Do not charge damaged batteries.
- Under extreme conditions, battery leakage may occur. When you notice liquid on the batteries carefully wipe the liquid off using a cloth. Avoid skin contact.
- In case of skin or eye contact, follow the instructions below.

**Warning!** The battery fluid may cause personal injury or damage to property. In case of skin contact, immediately rinse with water. If redness, pain or irritation occurs seek medical attention. In case of eye contact, rinse immediately with clean water and seek medical attention.

## Chargers

Your charger has been designed for a specific voltage. Always check that the mains voltage corresponds to the voltage on the rating plate.

**Warning!** Never attempt to replace the charger unit with a regular mains plug.

- Use your BLACK+DECKER charger only to charge the battery in the appliance/tool with which it was supplied. Other batteries could burst, causing personal injury and damage.
- Never attempt to charge nonrechargeable batteries.
- If the supply cord is damaged, it must be replaced by the manufacturer or an authorised BLACK+DECKER Service Centre in order to avoid a hazard.
- Do not expose the charger to water.
- Do not open the charger.
- Do not probe the charger.
- The appliance/tool/battery must be placed in a well ventilated area when charging.

## Safety of others

- This appliance can be used by children aged from 8 years and above and persons with reduced physical, sensory or mental capabilities or lack of experience and knowledge if they have been given supervision or instruction concerning use of the appliance in a safe way and understand the hazards involved. Children shall not play with the appliance.
- Cleaning and user maintenance shall not be made by children without supervision.

## Residual risks.

Additional residual risks may arise when using the tool which may not be included in the enclosed safety warnings. These risks can arise from misuse, prolonged use etc.

Even with the application of the relevant safety regulations
and the implementation of safety devices, certain residual
risks can not be avoided. These include:

- Injuries caused by touching any rotating/moving parts.
- Injuries caused when changing any parts, blades or accessories.
- Injuries caused by prolonged use of a tool. When using any tool for prolonged periods ensure you take regular breaks.
- Impairment of hearing.



Downloaded from www.Manualslib.com manuals search engine

- Health hazards caused by breathing dust developed when using your tool (example:- working with wood, especially oak, beech and MDF.).

**Electrical safety**

Your charger has been designed for a specific voltage. Always check that the mains voltage corresponds to the voltage on the rating plate. Never attempt to replace the charger unit with a regular mains plug.

Your charger is double insulated; therefore no earth wire is required. Always check that the mains voltage corresponds to the voltage on the rating plate. Never attempt to replace the adapter unit with a regular mains plug.

## Symbols on Charger

Short circuit proof safety isolating transformer.

SMPS

The charging base is intended for indoor use only.

## Labels on appliance

Read all of this manual carefully before using the appliance

SSA-6P-05 Only use with charger SSA-6P-05

| LED Patterns Charging | |
|---|---|
| ▬ ▬ ▬ ▬ | Charging |
| ▮▮▮▮▮▮▮▮▮▮ | Battery Fault |

| LED Patterns In use | |
|---|---|
| ▬ ▬ ▬ ▬ | Battery low |
| ▮▮▮▮▮▮▮▮▮▮ | Battery Empty |

## Battery diagnostics

If the appliance detects a weak battery, the charging indicator will flash at a fast rate when the power button is activated. Proceed as follows:

- Plug in the charger. Switch on at the mains.
- Leave the appliance to charge.

If the appliance detects a damaged battery, the charging indicator will flash at a fast rate when the appliance is on charge. Proceed as follows:

- Take the appliance and the charger to be tested at an authorised services centre.

**Note: It may take as long as 60 minutes to determine that the battery is defective. If the battery is too hot or too cold, the LED will alternately blink, fast and slow, one flash at each speed and repeat.**



Downloaded from www.Manualslib.com manuals search engine

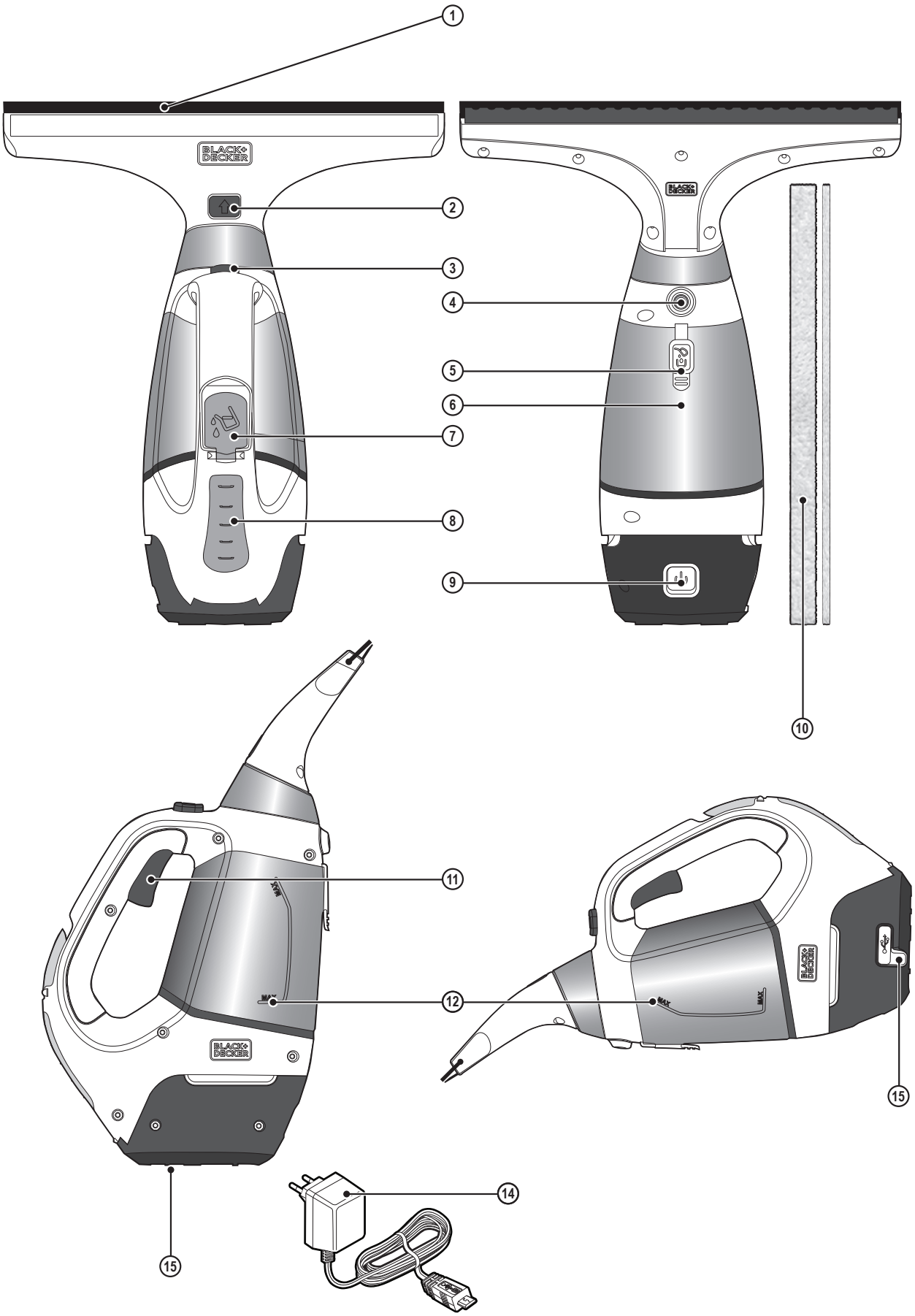




Downloaded from www.Manualslib.com manuals search engine

**Features**

1. Replaceable squeegee blade
2. Head release button
3. Head rotate button
4. Nozzle
5. Dirty water empty port
6. Dirty water tank
7. Cleaning solution fill port
8. Reservoir
9. Vacuum On/Off
10. Micro fibre pad
11. Spray trigger
12. Maximum dirty water line (vertical position & horizontal position)
13. Charging socket
14. Charger
15. Motor unit release button



Downloaded from www.Manualslib.com manuals search engine

## ASSEMBLY

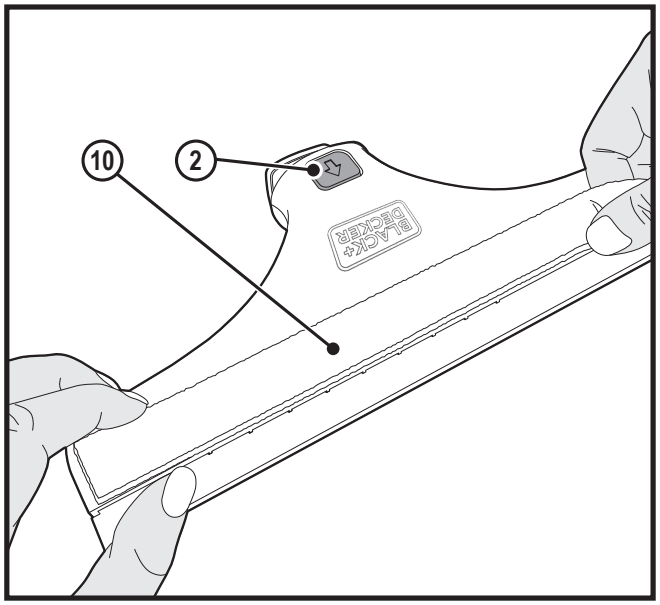


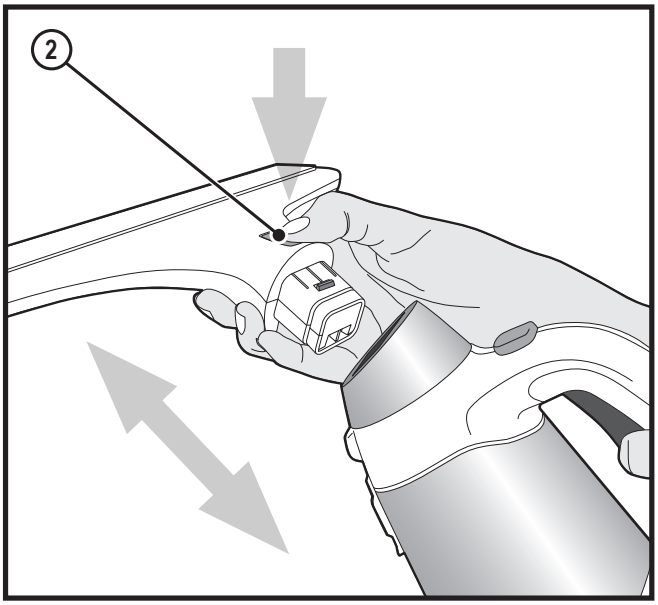


## CHARGING

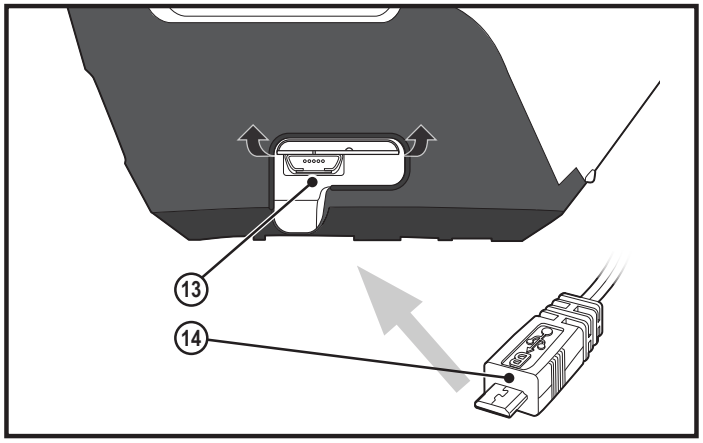


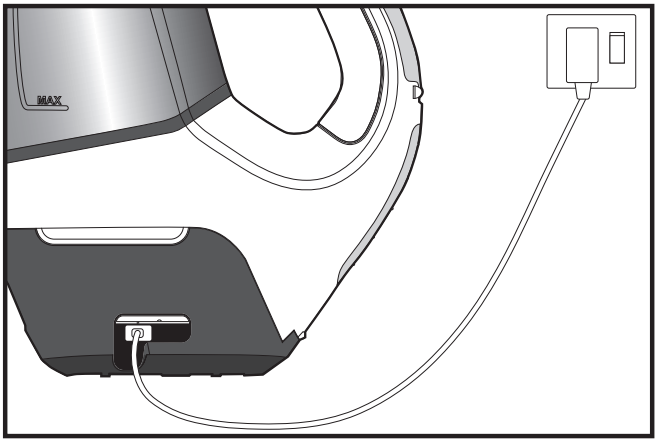


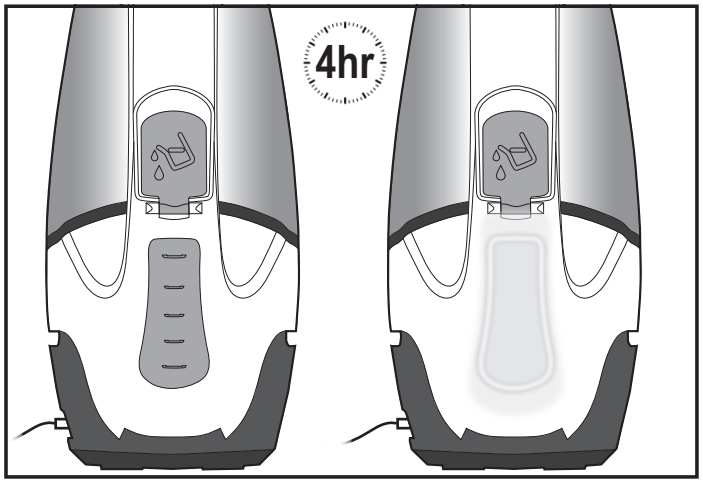


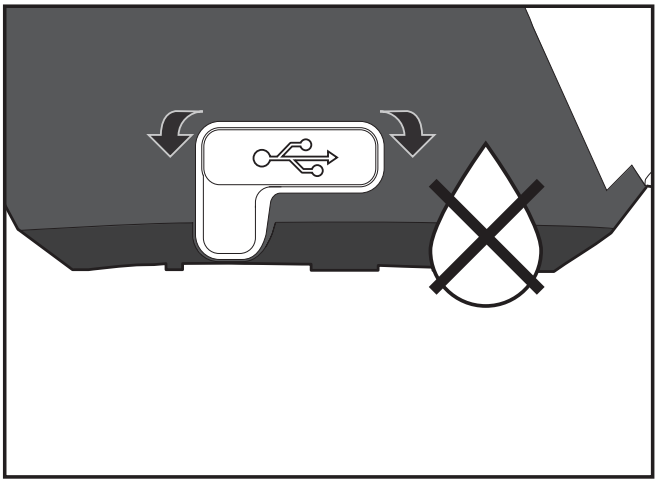



Downloaded from www.Manualslib.com manuals search engine

# USE

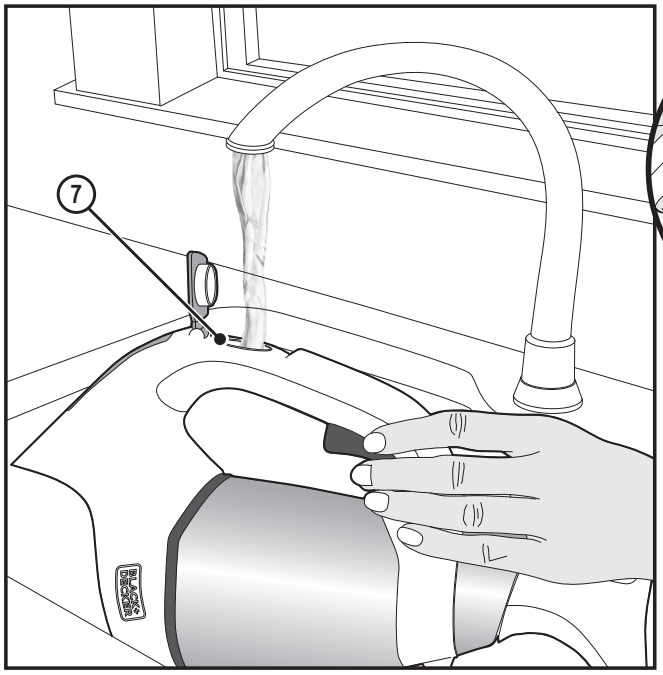


Fill

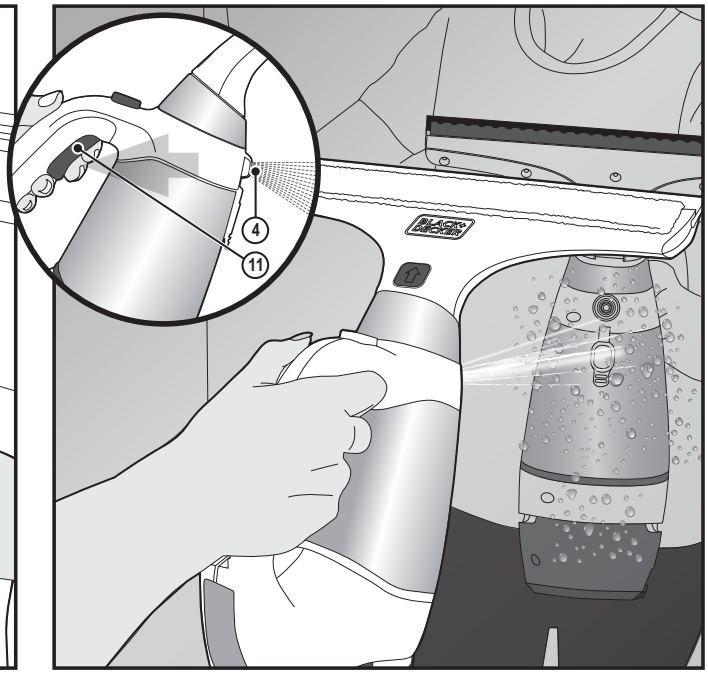


Spray

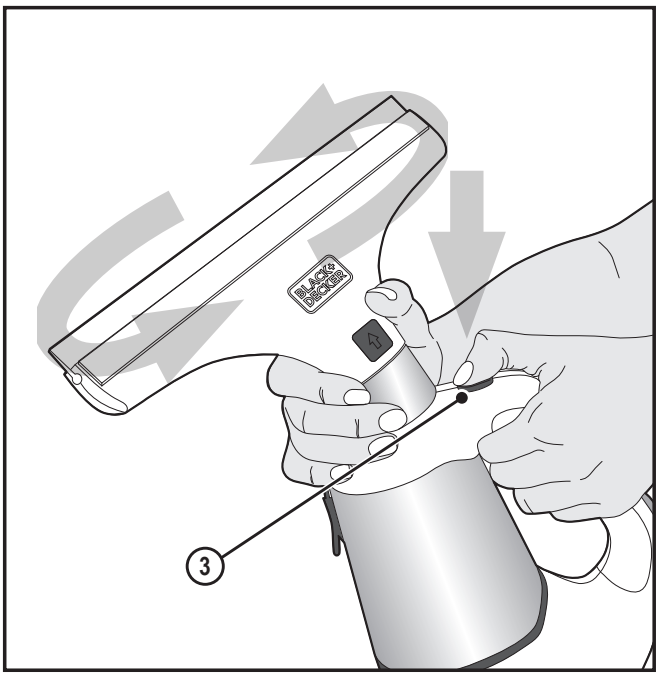


Rotate

Wash



Downloaded from www.Manualslib.com manuals search engine

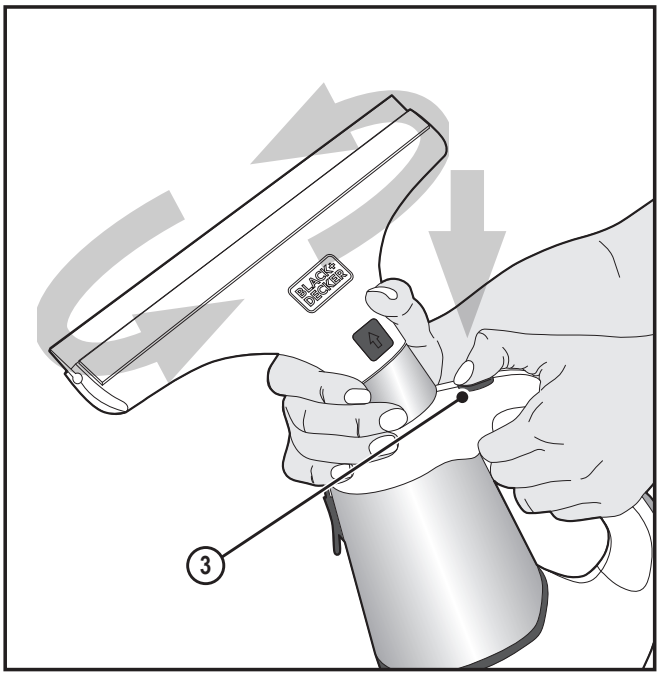


Rotate

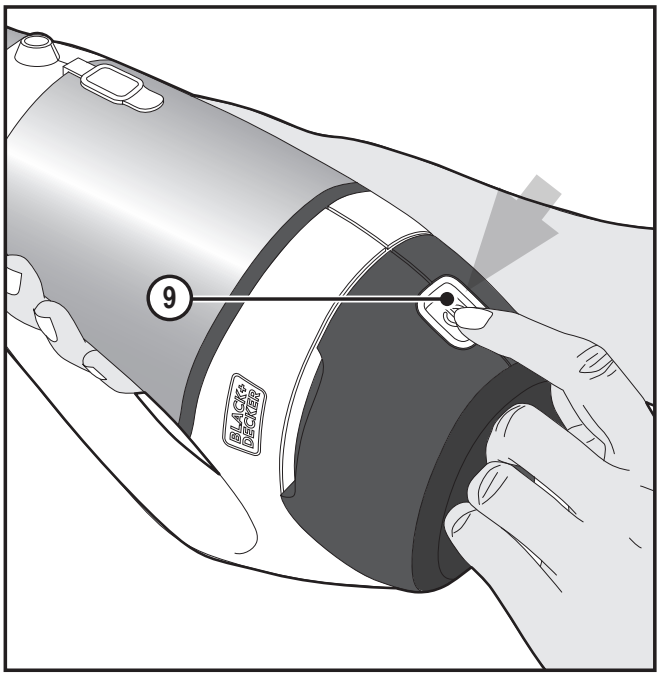


Power

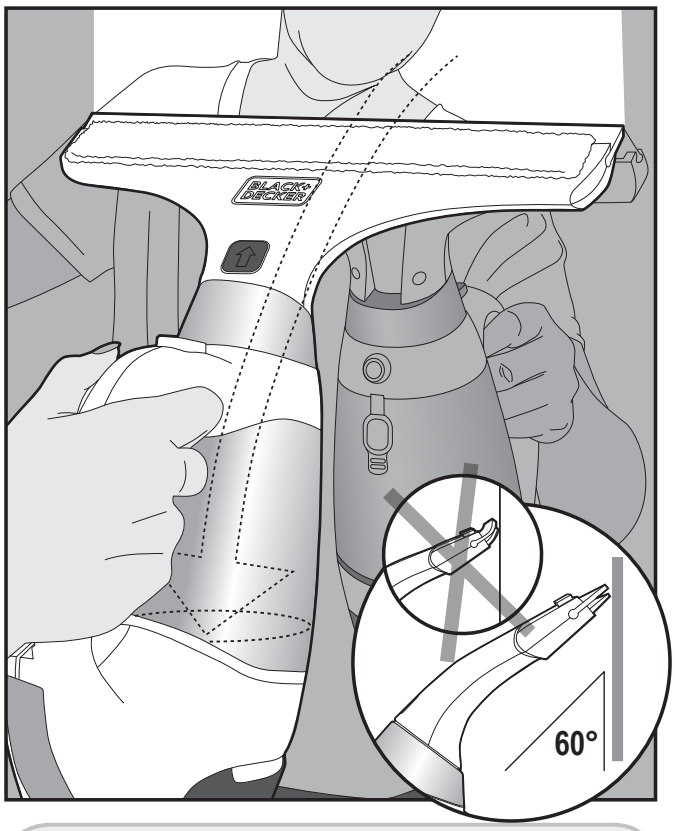


Vacuum

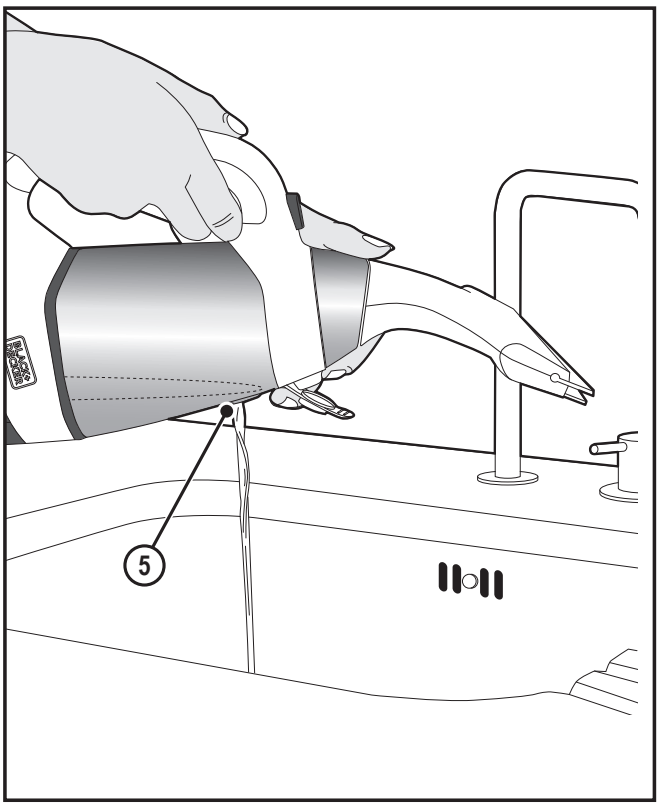


Emptying



Downloaded from www.Manualslib.com manuals search engine

# CLEAN

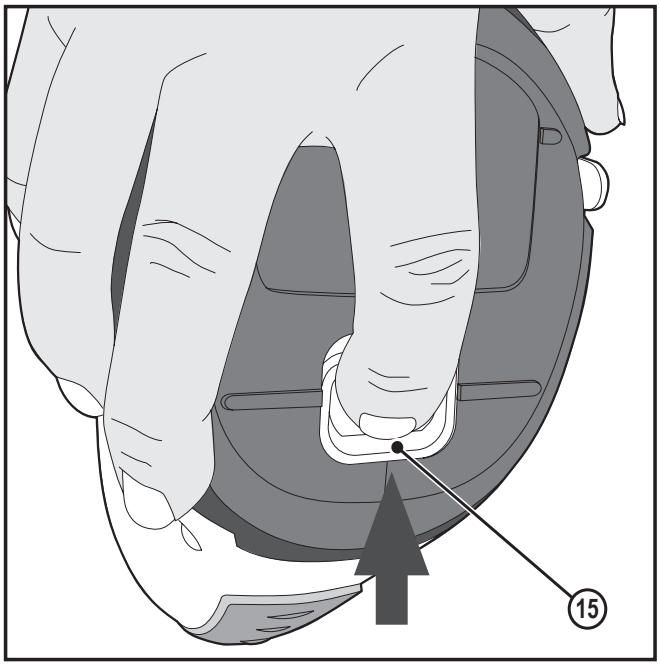


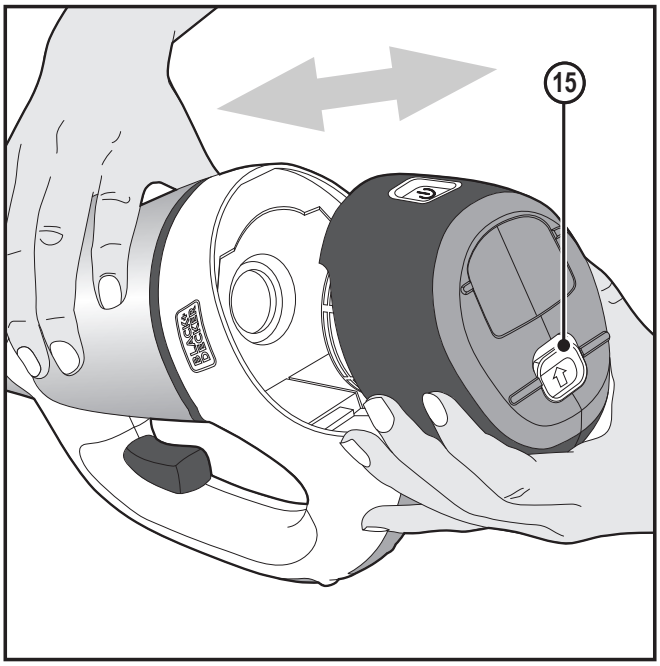


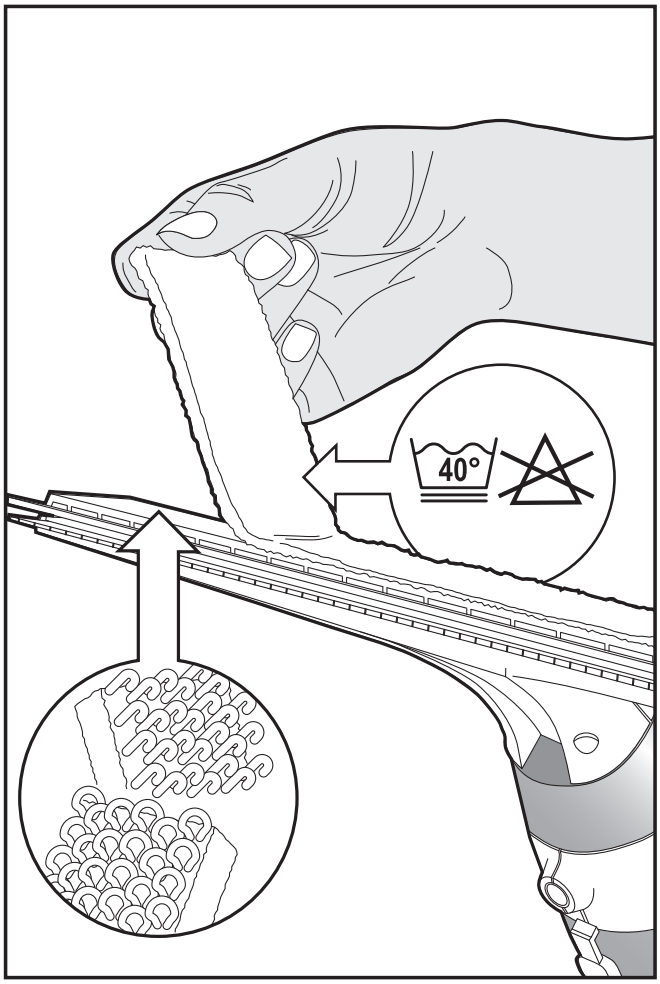


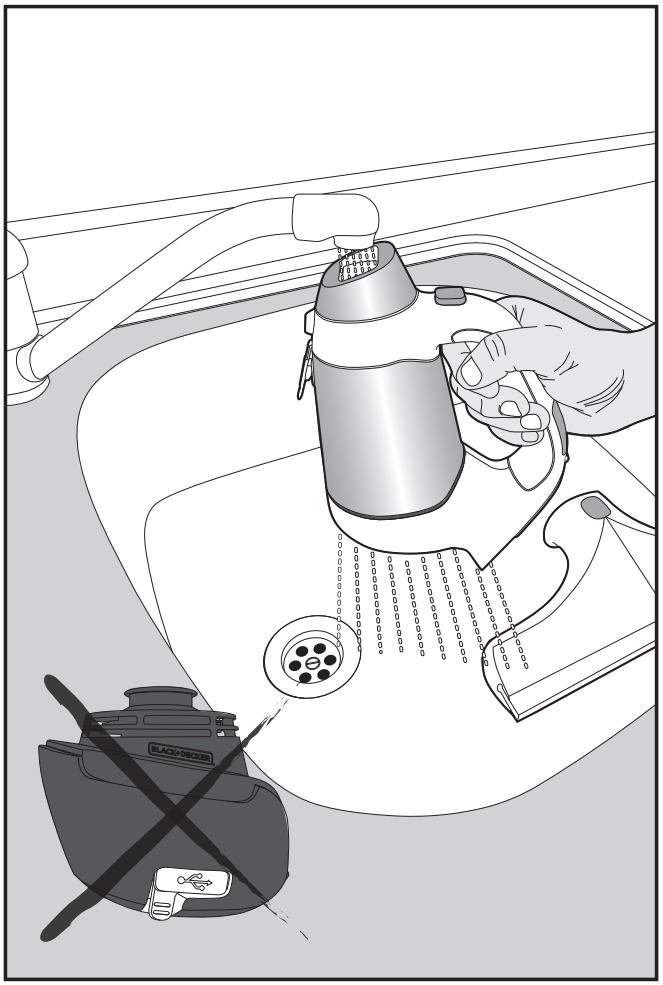



Downloaded from www.Manualslib.com manuals search engine

## USE ON

Windows

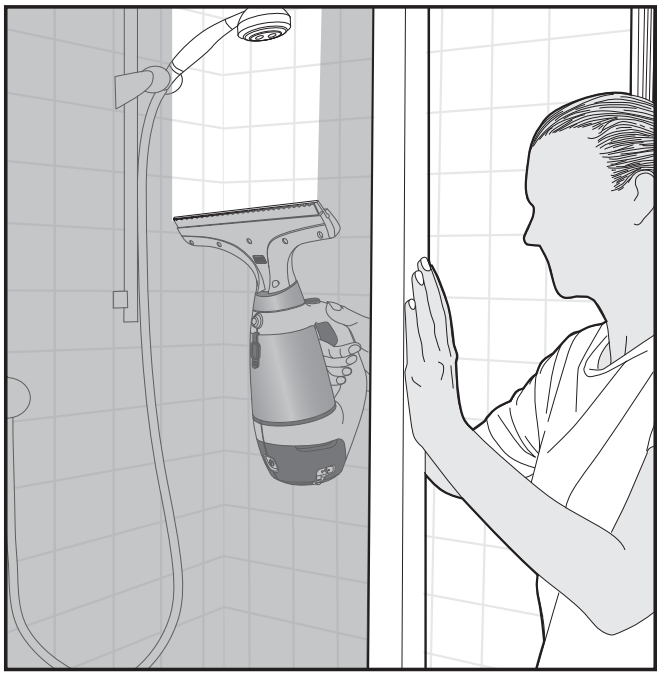

Showers

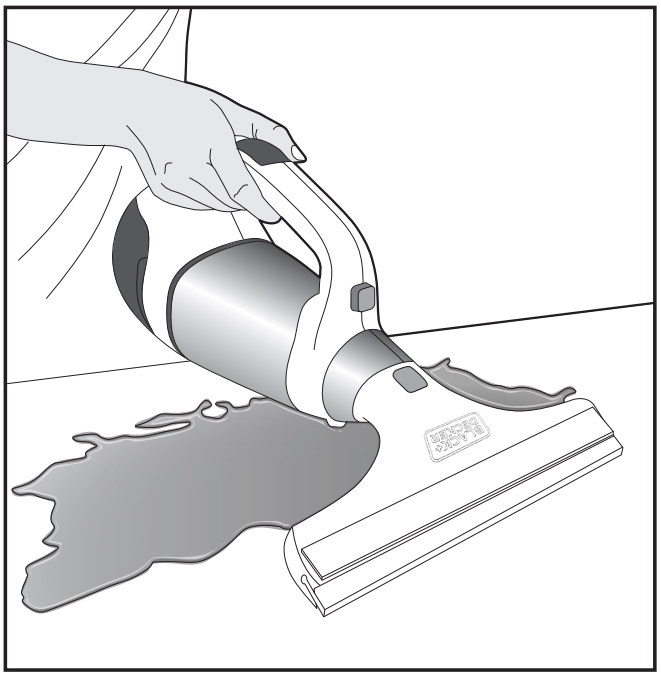

Spillages

**100 ml Max, empty the dirty water when it reaches Max line**



Downloaded from www.Manualslib.com manuals search engine

## Protecting the environment

Separate collection. This product must not be disposed of with normal household waste.

Should you find one day that your BLACK+DECKER product needs replacement, or if it is of no further use to you, do not dispose of it with household waste. Make this product available for separate collection.

Separate collection of used products and packaging allows materials to be recycled and used again. Re-use of recycled materials helps prevent environmental pollution and reduces the demand for raw materials.

Local regulations may provide for separate collection of electrical products from the household, at municipal waste sites or by the retailer when you purchase a new product.

BLACK+DECKER provides a facility for the collection and recycling of BLACK+DECKER products once they have reached the end of their working life. To take advantage of this service please return your product to any authorised repair agent who will collect them on our behalf.

You can check the location of your nearest authorised repair agent by contacting your local BLACK+DECKER office at the address indicated in this manual. Alternatively, a list of authorised BLACK+DECKER repair agents and full details of our after-sales service and contacts are available on the Internet at: www.2helpU.com

## Battery

- The battery must be removed from the appliance before it is scrapped;
- The appliance must be disconnected from the supply mains when removing the battery;
- The battery is to be disposed of safely.

## Available Accessories

| | Cat No. |
|---|---|
| 170mm Squeegee Head | WW100SA |
| 170mm Squeegee Blade | WW170SB |
| 280mm Squeegee Blade | WW280SB |
| 2 x 170mm micro fibre pads | WW170MPA |
| 2 x 280mm micro fibre pads | WW280MPA |

## Technical data

| | WW100 Window Washer |
|---|---|
| Voltage | 3.6V |
| Battery | Lithium Ion |
| Weight | 745g |

**Australia & New Zealand**

Stanley Black & Decker

www.blackanddecker.com.au

www.blackanddecker.co.nz

Tel.1800 338 002 (Aust) or Tel. 0800 339 258 (NZ)



Downloaded from www.Manualslib.com manuals search engine