This Owner's Manual is provided and hosted by Appliance Factory Parts.

Appliance Factory Parts
Experts in BBQ, Humidifier, & Appliance Parts
1-800-955-7075

George Foreman GF3TSBLK Owner's Manual

Shop genuine replacement parts for George Foreman GF3TSBLK

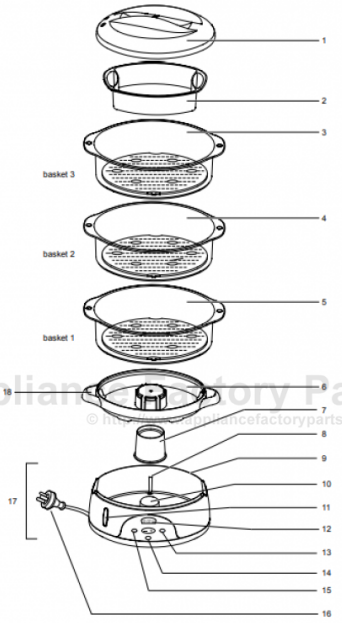

1. Lid
2. Rice bowl
3. Steamer basket 3
4. Steamer basket 2
5. Steamer basket 1
6. Drip tray
7. Turbo steam-ring
8. Water level indicator
9. Water reservoir
10. Heating element
11. Water level window
12. Digital display
13. Start/Stop button (O/I)
14. Steaming and Keep Warm indicator light
15. Program button (PROG)
16. Power cord
17. Steamer base
18. Spout

Find Your George Foreman Cooker Parts - Select From 12 Models

-------- Manual continues below --------

GEORGE FOREMAN®

HEALTHY COOKING

Food Steamer

GF3TSBLK

INSTRUCTIONS & WARRANTY

GF3TSBLK_IB_R_091111

Downloaded from www.Manualslib.com manuals search engine

Spectrum Brands Australia Pty Ltd
Locked Bag 3004 Braeside
Victoria 3195 Australia

Customer Service in Australia
TollFree: 1800 623 118
Email: info@spectrumbrands.com.au
Website: www.spectrumbrands.com.au

Spectrum Brands New Zealand Ltd
PO Box 9817 Newmarket
Auckland 1149 New Zealand

Customer Service in New Zealand
TollFree: 0800 736 776
Email: service@spectrumbrands.co.nz
Website: www.spectrumbrands.co.nz

Spectrum Brands Australia Pty Ltd and Spectrum Brands New Zealand Ltd Warranty Against Defects

W 0911

In this warranty:
Australian Consumer Law means the Australian consumer law set out in Schedule 2 to the Competition and Consumer Act 2010;
CGA means the New Zealand Consumer Guarantees Act 1993;
Goods means the product or equipment which was accompanied by this warranty and purchased in Australia or New Zealand, as the case may be;
Manufacturer, We or **us** means:

1. for Goods purchased in Australia, Spectrum Brands Australia Pty Ltd ABN, 78 007 070 573; or
2. for Goods purchased in New Zealand, Spectrum Brands New Zealand Ltd, as the case may be, contact details as set out at the end of this warranty;

Supplier means the authorised distributor or retailer of the Goods that sold you the Goods in Australia or in New Zealand; and
You means you, the original end-user purchaser of the Goods.

1. Our goods come with guarantees that cannot be excluded under the Australian Consumer Law, or the CGA. You are entitled to a replacement or refund for a major failure and compensation for any other reasonably foreseeable loss or damage. You are also entitled to have the goods repaired or replaced if the goods fail to be of acceptable quality and the failure does not amount to a major failure.
2. The benefits provided by this Warranty are in addition to all other rights and remedies in respect of the Goods which the consumer has under either the Australian Consumer Law or the CGA. The original purchaser of the Goods is provided with the following Warranty subject to the Warranty Conditions:
3. We warrant the Goods for all parts defective in workmanship or materials from the date of purchase (**Warranty Period**), for the period of:-
   (a) Two (2) years for Russell Hobbs products (see product packaging for details)
   (b) Two (2) years with five (5) year motor warranty for Russell Hobbs products (see product packaging for details)
   (c) Limited Lifetime, Ten (10) years for Russell Hobbs cookware.
   (d) One (1) year for George Foreman, iRobot, Westinghouse, Black & Decker and Spectrum Brands products.

If the Goods prove defective within the Warranty Period by reason of improper workmanship or material, we may, at our own discretion, repair or replace the Goods without charge.

Downloaded from www.Manualslib.com manuals search engine

Warranty Conditions

4. The Goods must be used in accordance with the manufacturer's instructions. This Warranty does not apply should the defect in or failure of the Goods be attributable to misuse, abuse, accident or non-observance of manufacturer's instructions on the part of the user. As far as the law permits, the manufacturer does not accept liability for any direct or consequential loss, damage or other expense caused by or arising out of any failure to use the Goods in accordance with the manufacturer's instructions.
5. Exhaustible components (such as batteries, filters and brushes) of the Goods are included under this Warranty only where there is a defect in workmanship or materials used.
6. The warranty granted under clause 3 is limited to repair or replacement only.
7. Any parts of the Goods replaced during repairs or any product replaced remain the property of the manufacturer. In the event of the Goods being replaced during the Warranty Period, the warranty on the replacement Goods will expire on the same date as for the Warranty Period on the original Goods which are replaced.
8. In order to claim under the warranty granted under clause 3 you must:
   (a) Retain this warranty with your receipt/proof of purchase; and
   (b) Return the Goods to us at the relevant address or to the Supplier by prepaid freight within the Warranty Period accompanied with (i) the legible and unmodified original proof of purchase, which clearly indicates the name and address of the Supplier, the date and place of purchase, the product name or other product serial number and (ii) this warranty.
9. This warranty is immediately void if:
   (a) Any serial number or appliance plate is removed or defaced;
   (b) The Goods have been serviced or otherwise repaired by a person not authorised to do so by us or where non approved replaced parts are used.
10. The Goods are designed for domestic use only. A limited 90-day Warranty applies to any industrial or commercial use of the Goods. The Goods must be connected to the electrical voltage requirements as specified in the ratings label located on the Goods.
11. This warranty does not cover the cost of claiming under the warranty or transport of the Goods to and from the Supplier or us.
12. This warranty is only valid and enforceable in Australia against Spectrum Brands Australia Pty Ltd and in New Zealand against Spectrum Brands New Zealand Ltd.

Contact us or the Supplier for further details.

Register your product online

If you live in Australia please visit: www.spectrumbrands.com.au/warranty
If you live in New Zealand Please visit: www.spectrumbrands.co.nz/warranty
Registration of your warranty is not compulsory, it gives us a record of your purchase AND entitles you to receive these benefits: Product information; Hints and tips; Recipes and news; Information on special price offers and promotions.

Any questions? Please contact Customer Service for advice.

Downloaded from www.Manualslib.com manuals search engine

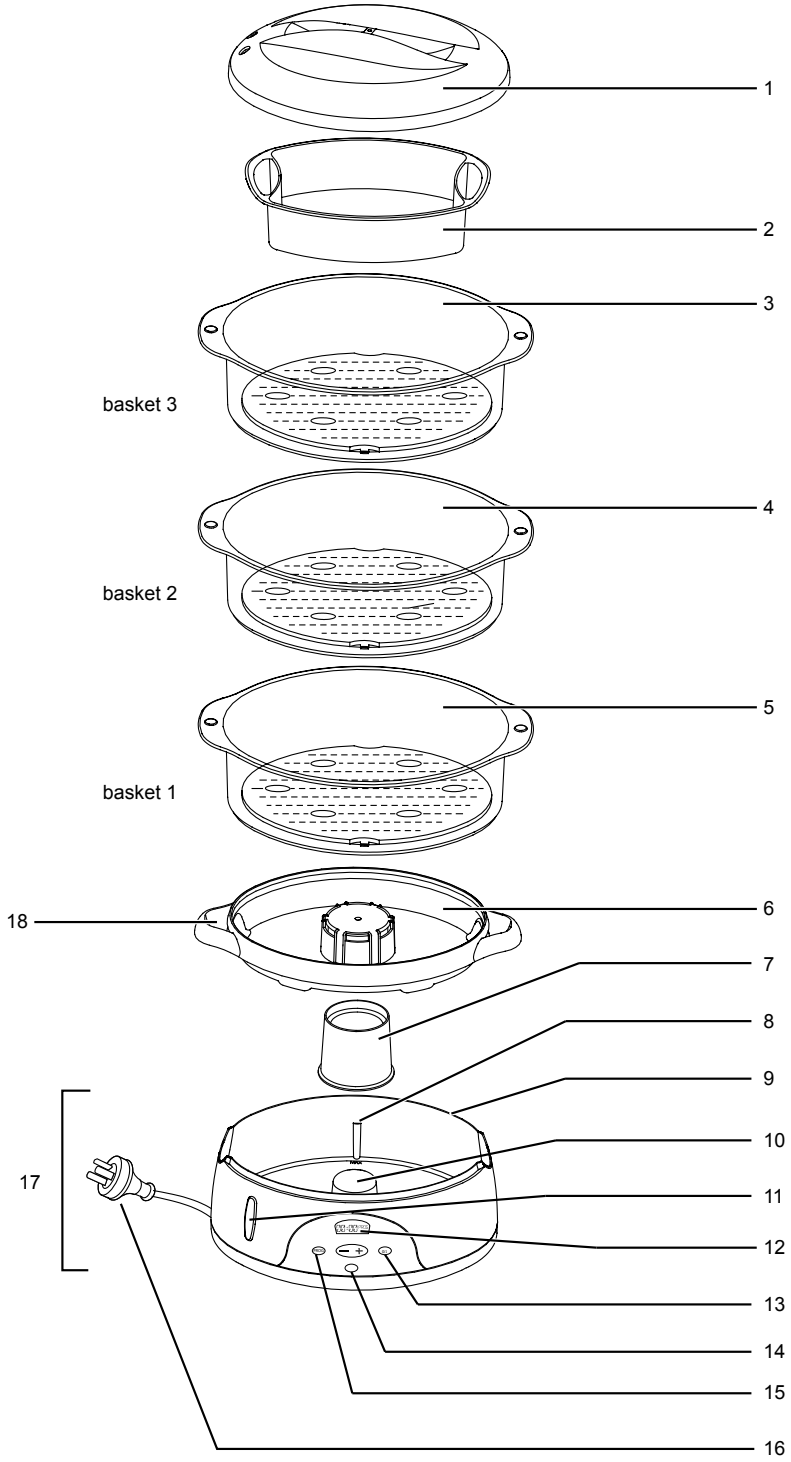

1. Lid
2. Rice bowl
3. Steamer basket 3
4. Steamer basket 2
5. Steamer basket 1
6. Drip tray
7. Turbo steam-ring
8. Water level indicator
9. Water reservoir
10. Heating element
11. Water level window
12. Digital display
13. Start/Stop button (O/I)
14. Steaming and Keep Warm indicator light
15. Program button (PROG)
16. Power cord
17. Steamer base
18. Spout

Downloaded from www.Manualslib.com manuals search engine

Congratulations on the purchase of your new George Foreman Food Steamer. Each unit is manufactured to ensure safety and reliability. Before using the Food Steamer for the first time, please read this instruction booklet carefully and keep it for future reference. Pass it on if you pass on the appliance.

When using this appliance, basic safety precautions should always be followed.

Before using your steamer for the first time

- Read all of the instructions included in this manual.
- Remove any packaging material and labels from the food steamer.
- Wash the lid, steamer baskets, rice bowl, drip tray and turbo ring in warm soapy water. Rinse and dry thoroughly.
- Wipe the inside of the water reservoir with a damp cloth, and dry thoroughly.

Assembling the steamer

- Place the steamer base on a stable surface.
- Place the turbo steam ring over the heating element (largest diameter on the bottom). This sits loosely.
- Fit the drip tray on top of the steamer base.
- Stack the steamer baskets on top of the drip tray and cover with the lid.

Stacking the steamer baskets

- The baskets can be stacked in various combinations – however they only stack in sequential order. This means basket 3 fits on top of 2, and 2 on top of 1.
- You can use all three baskets at a time, just two or only one.
- You cannot fit basket 3 on top of basket 1.
- The baskets are numbered on the side handles.

See diagram below for steamer basket stacker order and combinations:

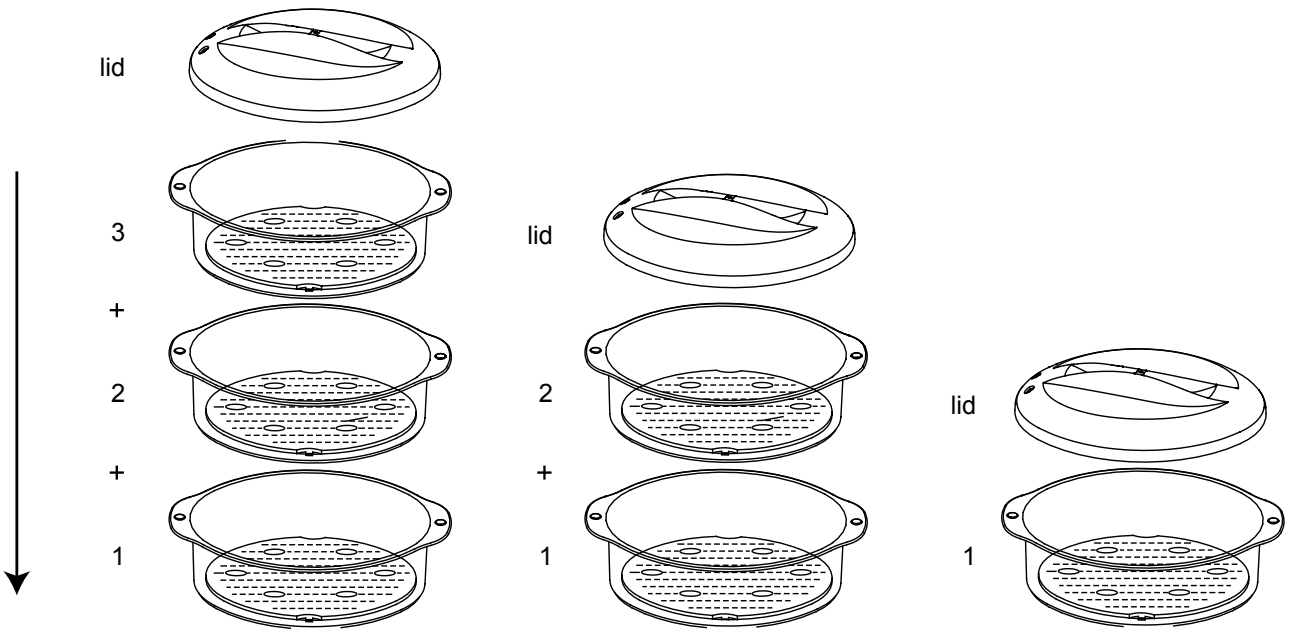

Downloaded from www.Manualslib.com manuals search engine

Using your Steamer

• Place the steamer base on a stable surface.
• Place the turbo steam-ring over the heating element (largest diameter on the bottom). This sits loosely.
• Fill the water reservoir up to MAX on the water level indicator with fresh, clean water.

NOTE: Only use clean, fresh water in your steamer. Do not use stock or any other liquids.

• Fit the drip tray on top of the water reservoir.
• Place the food to be steamed into the steamer basket/s.

TIP: Food cut into similar sized portions will cook at a similar rate.

• Stack the steamer baskets on top of the drip tray.
• Fit the lid onto the top steamer basket.
• Plug the steamer into a power outlet and turn the power on.
• Set the timer as required. (See 'Setting the timer' section)
• When time has elapsed, the steamer will switch to 'Keep Warm'.

CAUTION: The steamer will be hot! Take care when removing the lid as steam will escape and the steamer baskets and rice bowl will be hot.

• Once the steaming process has completed, press the '0/I' button to switch the 'Keep Warm' function Off.
• Using oven mitts or a cloth, carefully remove the lid from the steamer.
• Remove the baskets and place them on a heat resistant surface.
• Unplug the steamer from the power outlet and allow to cool before cleaning.

Setting the timer

• To begin steaming, push the '0/I' button. The display will show '45', flashing:

45

• Using the '+' or '-' buttons, set the desired time you wish to steam for. Time increases and decreases in 5 minute increments.

NOTE: If you set the timer to '0' it will automatically switch back to the clock mode, and you will have to start the process again. The maximum steam time you can set is 90 minutes.

• Once the desired time is set, wait 3-4 seconds and a beep will sound.
The beep sound indicates the steaming process has started. The indicator light will illuminate red, the timer will begin to count down, and steam will start to rise up through the steamer after a few moments.
• During the cooking process, check the food and adjust the cooking time if needed.
• To extend the cooking time, press the '+' button to display the revised time on the display.
• To reduce the cooking time, press the '-' button.
• When the set time has elapsed, a beep will sound and the steamer will automatically switch to 'Keep Warm'. The display will switch back to clock mode with the 'Keep Warm' symbol in the bottom right hand corner, and the indicator light will illuminate green.

Setting the clock

When you turn your steamer on, the display will show the time.

e.g. 12:34

• To set the time, press the 'PROG and '0/I' buttons simultaneously, then release. You will hear a beep.
• Using the '+' button increase the time in 10 minute increments, and using the '-' button, decrease the time in 1 minute increments.

Downloaded from www.Manualslib.com manuals search engine

• Once you have adjusted the clock to the current time, press the ‘PROG’ button to set the time.

Delayed start timer

Use the delayed start timer function to delay the commencement of the steaming process.

NOTE: For your safety, foods that require refrigeration should not be left sitting in the steamer for extended periods in ‘Delay Start’ mode.

• Press the ‘PROG’ button, and the display will flash:

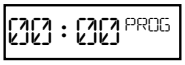

• Use the ‘+’ and ‘-‘ buttons to set the countdown timer to delay the time you require before steaming commences. (e.g. if it is 5:00pm and you want the unit to start steaming at 7:30pm set the countdown timer for 2 hours and 30 minutes (02:30).)

• Press the ‘PROG’ button and the display will show:

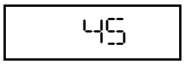

• Using the ‘+’ or ‘-‘ buttons, set the desired time you wish to steam for.

• Press the ‘PROG’ button again – now the unit is set.

• The unit returns to the clock mode with ‘PROG’ featuring in the right hand side of the display, showing the countdown timer has begun.

e.g. 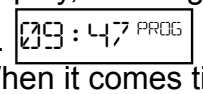

• When it comes time for the unit to commence steaming, a beep will sound indicating the steam process has started. The indicator light will illuminate red, the timer will begin to count down, and steam will start to rise up through the steamer after a few moments.

• During the cooking process, check the food and adjust the cooking time if needed.

• To extend the cooking time, press the ‘+’ button. The revised time will be shown on the display.

• To reduce the cooking time, press the ‘-’ button.

• When the set time has elapsed, a beep will sound and the steamer will automatically switch to ‘Keep Warm’. The display will switch back to clock mode with the ‘Keep Warm’ symbol in the bottom right hand corner, and the indicator light will illuminate green.

Keep Warm

When the steaming process has completed, a beep will sound and the unit will automatically switch to ‘Keep Warm’.

• The display will show the time, along with the ‘Keep Warm’ symbol in the bottom right hand corner, and the indicator light will illuminate green.

e.g. 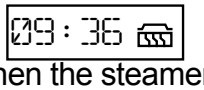

• When the steamer is in ‘Keep Warm’ mode, it will steam for 2 minutes out of every 8 minutes, until the water runs out. After this time, a beep will sound and the steamer will switch off.

• To switch the ‘Keep Warm’ function Off, press the ‘0/I’ button.

NOTE: Food will continue to cook whilst in ‘Keep Warm’ mode, but at a very slow rate.

Water Levels

• The steamer relies on water in the water reservoir to operate. Fill the water reservoir up to Max on the water level window with fresh, clean water.

• When cooking food in your steamer, continuously check the water level.

• If the water level is low in the water level window, simply top up the reservoir with clean water.

Downloaded from www.Manualslib.com manuals search engine

- Add the extra water to the reservoir by pouring water through the spouts on the sides of the drip tray.
- This may need to be repeated when steaming for extended periods of time.

Rice Bowl

- To cook rice in your steamer, add rice and water into the rice bowl. (Please see 'Steaming Guide' section for rice to water ratios)
- Place the rice bowl into the highest steamer basket used.
- Cover the basket with the lid and set the timer.

TIP: When using multiple trays, place the rice bowl in the top steaming basket. Using the rice bowl in the middle or bottom baskets can block the movement of steam around the food in the other steamer baskets.

Turning off

- To stop the steamer at anytime, press the '0/I' button.
- This will reset any programming and brings you back to the clock display.

Cleaning

Before cleaning your steamer, ensure that the power is turned off at the power outlet and the plug has been removed. Allow the steamer to cool down before disassembling and cleaning.

- Remove the lid, rice bowl, steamer baskets, drip tray and turbo steam-ring from the steamer base.
- Wash the lid, rice bowl, steamer baskets, drip tray and turbo steam-ring in warm soapy water, rinse and dry thoroughly.
- Alternatively you can also put the removable parts on the top rack of a dishwasher.
- DO NOT immerse the steamer base in water.
- Empty the water reservoir and wipe it clean with a damp cloth, and dry thoroughly.
- To clean the exterior, wipe with a damp cloth and dry thoroughly.

To descale:

- The steamer must be descaled after every 8 uses.
- Position the turbo steam-ring upside down around the heating element (the largest diameter facing up).
- Fill the water reservoir to the MAX level.
- Fill the inside of the turbo steam-ring with white vinegar to the same level.

CAUTION: DO NOT heat up.

- Leave overnight to descale.
- Rinse the inside of the water tank with warm water several times, and dry thoroughly before storing away.

Storage

- Ensure that the steamer is switched off and the plug is removed from the power outlet.
- Ensure all of the removable parts have been cleaned and dried thoroughly before storing.
- To store the unit effectively, stack the steamer baskets into each other. (basket 1 into basket 2, then together into basket 3)
- Put the rice bowl into steamer basket 1 and place the lid on top.
- Place the turbo steam-ring over the heating element and then the drip tray on the steamer base.
- Place the basket assembly on the steamer base and store away.

Downloaded from www.Manualslib.com manuals search engine

Important Safeguards

When using electrical appliances, basic safety precautions should always be followed.

1. To protect against electrical hazards do not immerse the power cord or steamer base in water or any other liquid.
2. Do not use it in a bathroom or near any source of water.
3. Do not use outdoors.
4. Always use the appliance handles as some parts may be hot.
5. This appliance creates hot steam which will escape when removing the lid or steaming baskets. Use a tea towel or oven gloves to protect your hands and forearms from hot steam.
6. This appliance is not intended for use by persons (including children) with reduced physical, sensory or mental capabilities, or lack of experience and knowledge, unless they have been given supervision or instruction concerning use of the appliance by a person responsible for their safety.
7. Always turn off and unplug from the wall power outlet before cleaning the appliance.
8. Turn the power off at the wall power outlet when not in use.
9. To disconnect, turn off the wall power outlet, then grasp and pull the plug from the wall outlet. Never pull by the cord.
10. Do not operate this appliance with a damaged cord/plug or after the appliance has malfunctioned, or been dropped or damaged in any manner. Contact Customer Service for replacement, examination, repair or adjustment.
11. There are no user serviceable parts. If power cord is damaged, it must be replaced by the manufacturer or similarly qualified person in order to avoid a hazard.
12. Do not use on an inclined plane or unstable surface.
13. Do not move the appliance while it is switched on.
14. A scalding hazard remains long after the appliance has finished steaming. Keep the appliance and the power cord away from the edge of tables or countertops and out of reach of children or infirm persons.
15. Do not place on or near any heat sources.
16. Do not use this appliance for other than its intended purpose of steaming with water only. Do not use stock or any other liquid in the steamer.
17. Do not switch on the steamer without water in the reservoir.
18. Do not fill past ‘Max’.
19. Do not leave the product unattended when in use or where it may be touched by children or infirm persons.
20. Do not use alkaline cleaning agents or harsh abrasives when cleaning this appliance. Follow the instructions in the ‘Cleaning’ section when cleaning this appliance.
21. This appliance is not a toy. Children should be supervised to ensure they do not play with the appliance.
22. This appliance is not intended to be operated by means of an external timer or separate remote control system.
23. For added safety, electrical appliances should be connected to a power outlet that is protected by a residual current device (RCD), also often referred to as a ‘Safety Switch’. Your switchboard may already incorporate an RCD. If unsure, call an electrician for verification and fitting if necessary.

SAVE THESE INSTRUCTIONS

THIS APPLIANCE IS FOR HOUSEHOLD USE ONLY

Downloaded from www.Manualslib.com manuals search engine

FILLET STEAK WITH TOMATO CONCASSE

INGREDIENTS

6 fillet steaks, lightly floured

Assorted mixed vegetables

TOMATO CONCASSE:

2 onions, finely chopped

2 tbsp olive oil

450g tin of tomatoes (chopped)

1 bay leaf

¼ tsp thyme

Grated zest of half an orange

Pinch of saffron

1 clove garlic, crushed

Salt & pepper, to taste

Serves 6

1. To make up the Tomato Concasse, heat the oil in a pan and sauté onions until translucent. Add tomatoes to pan with remaining ingredients and simmer, stirring occasionally until thick and rich. Put aside to cool.

2. Preheat George Foreman Grill. Trim fillets of any fat then place onto the heated grill. Cook for about 5 minutes, or until cooked to your liking.

3. While cooking the steaks, place vegetables into the steamer baskets, and steam for 7-12 minutes, or to desired taste.

4. Serve the steaks with Tomato Concasse and steamed vegetables.

Downloaded from www.Manualslib.com manuals search engine

STEAMED ASPARAGUS WITH EGG MAYONNAISE

INGREDIENTS

4 eggs

20 asparagus spears, trimmed

¾ cup mayonnaise

Pepper

Good squeeze of lemon juice

Serves 4

1. Place raw eggs in the base of a steamer basket, set steamer for 15 - 20 minutes. Remove after that time, crack all over and place into cold water. When they are cool, peel and chop eggs and set aside.

2. Trim asparagus spears and arrange in the base of a steamer basket. Set steamer for 7 minutes (a little less time if you like your asparagus really crisp).

3. Whilst the asparagus is cooking, mix the chopped egg into the mayonnaise, add pepper and lemon juice.

4. Arrange the warm asparagus spears on four serving plates, spoon the mayonnaise in a thick ribbon over each. Serve at once.

Downloaded from www.Manualslib.com manuals search engine

PRAWN AND RICE MEDLEY

INGREDIENTS

1½ cups rice

1½ cups boiling water

Pinch of salt

375g king prawns, uncooked

3 spring onions, chopped

½ red capsicum, finely chopped

Grated zest of 1 lemon

⅓ cup chopped Italian parsley

Chopped chives

Lemon slices to serve

Serves 4

1. Wash the rice in clean water and drain. Place the washed rice into the rice bowl, stir in boiling water and add salt. Set steamer for 20 - 25 minutes. Stir rice occasionally during cooking time to ensure even heat distribution. Check after 20 minutes to see if rice is sufficiently cooked. (If necessary, add a little more boiling water and continue cooking.)

2. Peel and devein prawns, place into a steamer basket and cook for 5 - 7 minutes or until flesh is opaque. When cool enough to handle, chop roughly.

3. When rice is cooked, stir in remaining ingredients, including prawns.

4. Spoon onto warmed plates or bowls, garnish with chives and lemon slices and serve with soy or preferred Asian sauce.

Downloaded from www.Manualslib.com manuals search engine

SAVOURY FISH PARCELS

INGREDIENTS

1½ cups cooked white rice
2 white fish fillets
2 tsp butter
Lemon slices
Pepper
Chopped dill
Red capsicum strips
Lemon wedges

Serves 2

1. Butter two squares of foil, place 3/4 cup of cooked rice on the base of each, arrange the fish fillet on top. Place a teaspoon of butter on each, top with 2 lemon slices, seasoned pepper, chopped herb and red capsicum strips. Fold up to form a parcel, gather in top edges to seal.

2. Set the timer for 30 minutes, place into the base of steamer basket and cook until flesh of fish is opaque.

3. The parcel may be served on the plate or turned onto serving plates, accompanied with the lemon wedges and a green salad.

Downloaded from www.Manualslib.com manuals search engine

CHICKEN FILLETS WITH PESTO

INGREDIENTS

4 chicken fillets, skin and fat removed
4 - 6 tbsp pesto
Snow peas
Asparagus spears
Mayonnaise
Sun-dried tomatoes
Basil

Serves 4

1. Using a rolling pin, flatten the thick end of the chicken fillets. Slice the fillet horizontally, without cutting right through. Open the fillet, spread with the pesto and “close” both sides together and fasten with toothpicks.

2. Arrange the fillets in the base of steamer basket and cook for approximately 20 minutes or until cooked. Remove from the steamer and allow to cool slightly while you cook the snow peas and asparagus.

3. Place the snow peas and asparagus spears in the steamer basket. Allow the snow peas to cook for 4 - 5 minutes and for asparagus 5 – 7 minutes.

4. When vegetables are ready, remove toothpicks from the chicken and cut into diagonal slices. Spoon juices collected in the juice tray over the chicken.

5. Serve with a mayonnaise into which finely chopped sun-dried tomatoes, finely shredded basil and a little more of the pesto have been stirred.

food & home living
Become a member
www.foodandhomeliving.com.au
Scan this code to learn more. Download a QR Reader App to scan the code

® Registered Trade Mark of Spectrum Brands, Inc., or one of its subsidiaries.
©2011 Spectrum Brands, Inc.

Recipes are to be used in conjunction with the Food Steamer by George Foreman.
All rights reserved. No part of this publication may be reproduced, stored in a retrieval system or transmitted in any form or by any means, electronic, mechanical, photocopying, recording or otherwise, without prior permission of the copyright owner.

Designed in Australia.

Downloaded from www.Manualslib.com manuals search engine

STEAMING GUIDE

The cooking times listed below are a general guide and will vary depending on personal preference, size, density and quality of the food being cooked. For frozen vegetables, follow the instructions on the package.

VEGETABLES	QUANTITY	APPROX. COOKING TIME
Asparagus	1 bunch	5 – 10 minutes
Beetroot	500g	30 – 40 minutes
Beans	500g	10 – 15 minutes
Broccoli	500g	10 – 16 minutes
Cauliflower	500g	12 – 18 minutes
Carrots (sliced)	500g	15 – 20 minutes
Corn – whole	3 – 5 cobs	10 – 20 minutes
Corn – baby	500g	10 – 15 minutes
Greens (bok choy, spinach etc)	500g	5 – 10 minutes
Parsnip	500g	10 – 15 minutes
Potatoes (quartered)	500g	25 – 30 minutes
Pumpkin (sliced)	500g	20 – 25 minutes
Snow Peas	250g	5 – 7 minutes
Sweet Potatoes (sliced)	500g	15 - 20 minutes
MEAT	QUANTITY	APPROX. COOKING TIME
Chicken (In foil)	1 breast fillet	20 – 25 minutes
Fish (In foil)	1 fish fillet/ cutlet	15 – 20 minutes
Prawns	400g	6 – 8 minutes
RICE	CUPS	APPROX. COOKING TIME
White rice	1 Rice - 1 Water	25 – 30 minutes
Brown rice	1 Rice - 1½ Water	55 – 60 minutes
OTHER	QUANTITY	APPROX. COOKING TIME
Eggs – Hard Boiled	4	15 - 20 minutes
Eggs – Soft Boiled	4	5 – 10 minutes
Hot Dogs	8	8 – 10 minutes
Dim Sims	10	15 - 20 minutes

Downloaded from www.Manualslib.com manuals search engine

GEORGE FOREMAN®

HEALTHY COOKING

RECIPES

Downloaded from www.Manualslib.com manuals search engine