This Owner's Manual is provided and hosted by Appliance Factory Parts.

Appliance Factory Parts
Experts in BBQ, Humidifier, & Appliance Parts
1-800-955-7075

EMPIRE DVD42FP73N-3 Owner's Manual

Shop genuine replacement parts for EMPIRE DVD42FP73N-3

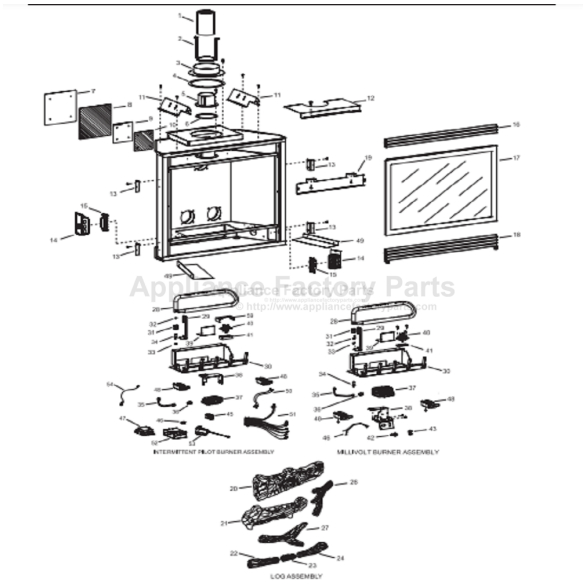

Find Your EMPIRE Fireplace Parts - Select From 642 Models

-------- Manual continues below --------

EMPIRE
COMFORT SYSTEMS
SINCE 1932

INSTALLATION INSTRUCTIONS

INSTALLER:
Leave this manual with the appliance.

CONSUMER:
Retain this manual for future reference.

⚠ WARNING

FIRE OR EXPLOSION HAZARD
Failure to follow safety warnings exactly could result in serious injury, death, or property damage.

- **Do not store or use gasoline or other flammable vapors and liquids in the vicinity of this or any other appliance.**
- **WHAT TO DO IF YOU SMELL GAS**
  - **Do not try to light any appliance.**
  - **Do not touch any electrical switch; do not use any phone in your building.**
  - **Leave the building immediately.**
  - **Immediately call your gas supplier from a neighbor's phone. Follow the gas supplier's instructions.**
  - **If you cannot reach your gas supplier, call the fire department.**
- **Installation and service must be performed by a qualified installer, service agency or the gas supplier.**

DANGER

HOT GLASS WILL CAUSE BURNS.
DO NOT TOUCH GLASS UNTIL COOLED.
NEVER ALLOW CHILDREN TO TOUCH GLASS.

A barrier designed to reduce the risk of burns from the hot viewing glass is provided with this appliance and must be installed for the protection of children and other at-risk individuals.

NOTICE: Barrier required, but may be sold separately.

DIRECT-VENT ZERO CLEARANCE GAS FIREPLACE HEATER SERIES:

GAS-FIRED c UL us LISTED

MILLIVOLT (MV)
DVD(32,36,42,48)FP3(0,1,2)(N,P)-3
DVD(32,36,42,48)FP33(N,P)-4

INTERMITTENT PILOT (IP)
DVD(32,36,42,48)FP7(0,1,3)(N,P)-3

CARTON CONTENTS

- Accessory Sheet
- Hardware Pack
- AA Battery (4) (IP only)
- Junction Box Cover
- Logs
- Rockwool
- Registration Card
- Power Adaptor (IP only)
- Receptical
- Decorative Rocks

⚠ WARNING

If not installed, operated and maintained in accordance with the manufacturer's instructions, this product could expose you to substances in fuel or from fuel combustion which can cause death or serious illness.

This appliance may be installed in an aftermarket, permanently located, manufactured home (USA only) or mobile home, where not prohibited by state or local codes.
This appliance is only for use with the type of gas indicated on the rating plate. This appliance is not convertible for use with other gases, unless a certified kit is used.

NATIONAL FIREPLACE INSTITUTE
NFI
CERTIFIED
www.nficertified.org

We suggest that our gas hearth products be installed and serviced by professionals who are certified in the U.S. by the National Fireplace Institute® (NFI) as NFI Gas Specialists.

TABLE OF CONTENTS

SECTION **PAGE**

Important Safety Information 3
Safety Information For Users Of Propane Gas 4
Requirements For Massachusetts 5
Introduction 6
Specifications 7
Vent System Identification 8
Special Vent Systems 8
Fireplace Dimensions 9
Clearances 10
Locating Fireplace 11
Gas Supply 12
Installation 13-17
Venting Fireplace - Top 18-20
Examples - Top Vent Run 21
Venting Fireplace - Rear 22
Examples - Rear Vent Run 23
Rear Vent Conversion 24
Vent Clearances 25
Framing And Finishing 26-27
Termination Clearances 28
Horizontal Termination 29
Vertical Termination 30-31
DVVK-4F Flex Vent Instructions 32
DVVK-4RE Vent Kit Installation Instructions 33-35
Log Placement (5 Log Set) - DVD(32,36)FP 36
Log Placement (7 Log Set) - DVD(42,48)FP 37
Millivolt Operating Instructions (FP3 Series) 38-39
Millivolt Standing Pilot Wiring Diagram (FP3 Series) 40
Millivolt Standing Pilot Lighting Instructions (FP3 Series) 41
Millivolt Standing Pilot Troubleshooting (FP3 Series) 42
IPI Electronic System Operating Instructions (FP7 Series) 43
IPI Electronic System Wiring Diagram (FP7 Series) 44
Intermittent Pilot Lighting Instructions (FP7 Series) 45
Intermittent Pilot Control System Troubleshooting (FP7 Series) 46-48
Maintenance And Service 49-50
Important Safety Information 51
DVD32FP(3,7) Parts List 52
DVD32FP(3,7) Parts View 53
DVD36FP(3,7) Parts List 54
DVD36FP(3,7) Parts View 55
DVD42FP(3,7) Parts List 56
DVD42FP(3,7) Parts View 57
DVD48FP(3,7) Parts List 58
DVD48FP(3,7) Parts View 59
FBB4 Optional Variable Speed Blower Installation 60-61
Junction Box Wiring Installation Instructions 62
Optional Brick Liner Installation Instructions 62
Accessories 63
Decorative Accessories 64
Appliance Service History 65
Master Parts Distributor List 66
How To Order Repair Parts 66
Warranty 67

IMPORTANT SAFETY INFORMATION

Before enclosing the vent pipe assembly, operate the appliance to ensure it is venting properly.

DO NOT OPERATE THIS APPLIANCE WITHOUT GLASS FRONT PANEL INSTALLED

WARNING

1. "Due to high temperatures, the appliance should be located out of traffic and away from furniture and draperies."
2. "Children and adults should be alerted to the hazards of high surface temperature and should stay away to avoid burns or clothing ignition."
3. "Young children should be carefully supervised when they are in the same room as the appliance. Toddlers, young children, and others may be susceptible to accidental contact burns. A physical barrier is recommended if there are at-risk individuals in the house. To restrict access to a fireplace or stove, install an adjustable safety gate to keep toddlers, young children, and other at-risk individuals out of the room and away from hot surfaces."
4. For appliances requiring a barrier, as determined under Clause 5.15.4: "A barrier designed to reduce the risk of burns from the hot viewing glass is provided with this appliance and shall be installed for the protection of children and other at-risk individuals."
5. "If the barrier becomes damaged, the barrier shall be replaced with the manufacturer's barrier for this appliance."
6. "Clothing or other flammable material should not be placed on or near the appliance."
7. "Any safety screen, guard, or barrier removed for servicing an appliance must be replaced prior to operating the appliance" (see Clause 4.1.6).
8. "Installation and repair should be done by a qualified service person. The appliance should be inspected before use and at least annually by a professional service person. More frequent cleaning might be required due to excessive lint from carpeting, bedding material, et cetera. It is imperative that control compartments, burners, and circulating air passageways of the appliance be kept clean."
9. The instructions for an appliance optionally for use with glass doors (or equivalent) shall state that, "Only doors certified with the appliance shall be used."
10. The instructions for an appliance not intended for use with glass doors (or equivalent) shall emphasize that the appliance is not for use with glass doors.
11. Where applicable, provide a means by which the consumer can identify the barrier, (such as graphic representation, clear description, or reference marking).

WARNING

CARBON MONOXIDE POISONING HAZARD

Failure to follow the steps outlined below for each appliance connected to the venting system being placed into operation could result in carbon monoxide poisoning or death. The following steps shall be followed for each appliance connected to the venting system being placed into operation, while all other appliances connected to the venting system are not in operation:

1. Seal any unused openings in the venting system.
2. Inspect the venting system for proper size and horizontal pitch, as required in the *National Fuel Gas Code ANSI Z223.1/NFPA 54* or *the National Gas and Propane Installation Code* CSA B149.1 and these instructions. Determine that there is no blockage or restriction, leakage, corrosion and other deficiencies which could cause an unsafe condition.
3. As far as practical, close all building doors and windows and all doors between the space in which the appliance(s) connected to the venting system are located and other spaces of the building.
4. Close fireplace dampers.
5. Turn on clothes dryers and any appliance not connected to the venting system. Turn on any exhaust fans, such as range hoods and bathroom exhausts, so they are operating at maximum speed. Do not operate a summer exhaust fan.
6. Follow the lighting instructions. Place the appliance being inspected into operation. Adjust the thermostat so appliance is operating continuously.
7. Test for spillage from draft hood equipped appliances at the draft hood relief opening after 5 minutes of main burner operation. Use the flame of a match or candle.
8. If improper venting is observed during any of the above tests, the venting system must be corrected in accordance with *National Fuel Gas Code*, ANSI Z223.1/NFPA and/or *National Gas and Propane Installation Code*, CSA B149.1.
9. After it has been determined that each appliance connected to the venting system properly vents when tested as outlined above, return doors, windows, exhaust fans, fireplace dampers and any other gas-fired burning appliance to their previous conditions of use.

SAFETY INFORMATION FOR USERS OF PROPANE GAS

Propane is a flammable gas which can cause fires and explosions. In its natural state, propane is odorless and colorless. You may not know all the following safety precautions which can protect both you and your family from an accident. Read them carefully now, then review them point by point with the members of your household. Someday when there may not be a minute to lose, everyone's safety will depend on knowing exactly what to do. If, after reading the following information, you feel you still need more information, please contact your gas supplier.

PROPANE GAS WARNING ODOR

If a gas leak happens, you should be able to smell the gas because of the odorant put in the Propane Gas. That's your signal to go into immediate action!

- Do not operate electric switches, light matches, use your phone. Do not do anything that could ignite the gas.
- Get everyone out of the building, vehicle, trailer, or area. Do that IMMEDIATELY.
- Close all gas tank or cylinder supply valves.
- Propane Gas is heavier than air and may settle in low areas such as basements. When you have reason to suspect a gas leak, keep out of basements and other low areas. Stay out until firefighters declare them to be safe.
- Use your neighbor's phone and call a trained Propane Gas service person and the fire department. Even though you may not continue to smell gas, do not turn on the gas again. Do not re-enter the building, vehicle, trailer, or area.
- **Finally,** let the service man and firefighters check for escaped gas. Have them air out the area before you return. Properly trained Propane Gas service people should repair the leak, then check and relight the gas appliance for you.

NO ODOR DETECTED - ODOR FADE

Some people cannot smell well. Some people cannot smell the odor of the chemical put into the gas. You must find out if you can smell the odorant in propane. Smoking can decrease your ability to smell. Being around an odor for a time can affect your sensitivity or ability to detect that odor. Sometimes other odors in the area mask the gas odor. People may not smell the gas odor or their minds are on something else. Thinking about smelling a gas odor can make it easier to smell.

The odorant in Propane Gas is colorless, and it can fade under some circumstances. For example, if there is an underground leak, the movement of the gas through soil can filter the odorant. Odorants in Propane Gas also are subject to oxidation. This fading can occur if there is rust inside the storage tank or in iron gas pipes.

The odorant in escaped gas can adsorb or absorb onto or into walls, masonry and other materials and fabrics in a room. That will take some of the odorant out of the gas, reducing its odor intensity.

Propane Gas may stratify in a closed area, and the odor intensity could vary at different levels. Since it is heavier than air, there may be more odor at lower levels. Always be sensitive to the slightest gas odor. If you detect any odor, treat it as a serious leak. Immediately go into action as instructed earlier.

SOME POINTS TO REMEMBER

- **Learn to recognize the odor of Propane Gas.** Your local Propane Gas Dealer can give you a "Scratch and Sniff" pamphlet. Use it to find out what the propane odor smells like. If you suspect that your Propane Gas has a weak or abnormal odor, call your Propane Gas Dealer.
- If you are not qualified, do not light pilot lights, perform service, or make adjustments to appliances on the Propane Gas system. If you are qualified, consciously think about the odor of Propane Gas prior to and while lighting pilot lights or performing service or making adjustments.
- Sometimes a basement or a closed-up house has a musty smell that can cover up the Propane Gas odor. Do not try to light pilot lights, perform service, or make adjustments in an area where the conditions are such that you may not detect the odor if there has been a leak of Propane Gas.
- Odor fade, due to oxidation by rust or adsorption on walls of new cylinders and tanks, is possible. Therefore, people should be particularly alert and careful when new tanks or cylinders are placed in service. Odor fade can occur in new tanks, or reinstalled old tanks, if they are filled and allowed to set too long before refilling. Cylinders and tanks which have been out of service for a time may develop internal rust which will cause odor fade. If such conditions are suspected to exist, a periodic sniff test of the gas is advisable. **If you have any question about the gas odor, call your Propane Gas Dealer. A periodic sniff test of the Propane Gas is a good safety measure under any condition.**
- If, at any time, you do not smell the Propane Gas odorant and you think you should, assume you have a leak. Then take the same immediate action recommended above for the occasion when you do detect the odorized Propane Gas.
- If you experience a complete "gas out," (the container is under no vapor pressure), turn the tank valve off immediately. If the container valve is left on, the container may draw in some air through openings such as pilot light orifices. If this occurs, some new internal rusting could occur. If the valve is left open, then treat the container as a new tank. Always be sure your container is under vapor pressure by turning it off at the container before it goes completely empty or having it refilled before it is completely empty.

REQUIREMENTS FOR MASSACHUSETTS

For all side wall horizontally vented gas fueled equipment installed in every dwelling, building or structure used in whole or in part for residential purposes, including those owned or operated by the Commonwealth and where the side wall exhaust vent termination is less than seven feet above finished grade in the area of the venting, including but not limited to decks and porches, the following requirements shall be satisfied:

1. INSTALLATION OF CARBON MONOXIDE DETECTORS. At the time of installation of the side wall horizontal vented gas fueled equipment, the installing plumber or gasfitter shall observe that a hard wired carbon monoxide detector with an alarm and battery back-up is installed on the floor level where the gas equipment is to be installed. In addition, the installing plumber or gasfitter shall observe that a battery operated or hard wired carbon monoxide detector with an alarm is installed on each additional level of the dwelling, building or structure served by the side wall horizontal vented gas fueled equipment. It shall be the responsibility of the property owner to secure the services of qualified licensed professionals for the installation of hard wired carbon monoxide detectors
   a. In the event that the side wall horizontally vented gas fueled equipment is installed in a crawl space or an attic, the hard wired carbon monoxide detector with alarm and battery back-up may be installed on the next adjacent floor level.
   b. In the event that the requirements of this subdivision can not be met at the time of completion of installation, the owner shall have a period of thirty days to comply with the above requirements; provided, however, that during said thirty day period, a battery operated carbon monoxide detector with an alarm shall be installed.

2. APPROVED CARBON MONOXIDE DETECTORS. Each carbon monoxide detector as required in accordance with the above provisions shall comply with NFPA 720 and be ANSI/UL 2034 listed and IAS certified.

3. SIGNAGE. A metal or plastic identification plate shall be permanently mounted to the exterior of the building at a minimum height of eight feet above grade directly in line with the exhaust vent terminal for the horizontally vented gas fueled heating appliance or equipment. The sign shall read, in print size no less than on 1/2 inch in size, **"GAS VENT DIRECTLY BELOW. KEEP CLEAR OF ALL OBSTRUCTIONS".**

4. INSPECTION. The state or local gas inspector of the side wall horizontally vented gas fueled equipment shall not approve the installation unless, upon inspection, the inspector observes carbon monoxide detectors and signage installed in accordance with the provisions of 248 CMR 5.08(2)(a) 1 through 4.
   (b) EXEMPTIONS: The following equipment is exempt from 248 CMR 5.08(2)(a)1 through 4:
      1. The equipment listed in Chapter 10 entitled "Equipment Not Required To Be Vented" in the most current edition of NFPA 54 as adopted by the Board; and
      2. Product Approved side wall horizontally vented gas fueled equipment installed in a room or structure separate from the dwelling, building or structure used in whole or in part for residential purposes.
   (d) MANUFACTURER REQUIREMENTS - GAS EQUIPMENT VENTING SYSTEM NOT PROVIDED. When the manufacturer of a Product Approved side wall horizontally vented gas fueled equipment does not provide the parts for venting the flue gases, but identifies "special venting systems", the following requirements shall be satisfied by the manufacturer:
      1. The referenced "special venting system" instructions shall be included with the appliance or equipment installation instructions; and
      2. The "special venting systems" shall be Product Approved by the Board, and the instructions for that system shall include a parts list and detailed installation instruction.
   (e) A copy of all installation instructions for all Product Approved side wall horizontally vented gas fueled equipment, all venting instructions, all parts lists for venting instructions, and/or all venting design instructions shall remain with the appliance or equipment at the completion of the installation.

INTRODUCTION

Instructions to Installer

1. Installer must leave instruction manual with owner after installation.
2. Installer must have owner fill out and mail warranty card supplied with the fireplace.
3. Installer should show owner how to start and operate the fireplace.

This direct vent gas fireplace heater is designed to operate with all combustion air being siphoned from the outside of the building and all exhaust gases expelled to the outside of the building. The information contained in this manual pertains to all models and gas control systems unless otherwise noted.

⚠ WARNING

This unit is not for use with solid fuels.

Appliance Certification

This fireplace is design certified in accordance with American National Standard/CSA Standard ANSI Z21.88/CSA 2.33 and by Underwriters Laboratories as a Direct Vent Gas Fireplace Heater and shall be installed according to these instructions.

Consult your local building code agency, prior to installation, to ensure compliance with local codes-including permits and inspections.

The fireplace, when installed, must be electrically grounded in accordance with local codes or, in absence of local codes, with the *National Electric Code ANSI/NFPA 70* or Canadian Electric code, CSA C22.1, if an external electrical source is utilized.

These models may be installed in a bedroom or bed-sitting room in the U.S.A. and Canada.

Qualified Installing Agency

Installation and replacement of gas piping, gas utilization equipment or accessories and repair and servicing of equipment shall be performed only by a qualified agency. The term “qualified agency” means any individual, firm, corporation or company which either in person or through a representative is engaged in and is responsible for (a) the installation or replacement of gas piping or (b) the connection, installation, repair or servicing of equipment, who is experienced in such work, familiar with all precautions required and has complied with all the requirements of the authority having jurisdiction.

Commonwealth of Massachusetts: The installation must be made by a licensed plumber or gas fitter in the Commonwealth of Massachusetts.

The installation must conform with local codes or, in the absence of local codes, with the *National Fuel Gas Code ANSI Z223.1/NFPA 54* Natural Gas and Propane Installation Code, or CSA B149.1 in Canada. *Available from the American National Standards Institute, Inc. 11 West 42nd St., New York, N.Y. 10036.*

Any alteration of the original design, installed other than as shown in these instructions or use with a type of gas not shown on the rating plate is the responsibility of the person and company making the change.

⚠ WARNING

ANY CHANGE TO THIS FIREPLACE OR ITS CONTROLS CAN BE DANGEROUS.
Improper installation or use of the fireplace can cause serious injury or death from fire, burns, explosions, or carbon monoxide poisoning.

Important

All correspondence should refer to complete Model Number, Serial Number and type of gas.

High Altitude

When installing this unit at an elevation above 2000 feet (in the United States) it may be necessary to decrease the input rating by changing the existing burner orifice to a smaller size. Generally, input should be reduced 4 percent for each 1000 feet above sea level. However, if the heating value of the gas has been reduced, this general rule may not apply. Check with local gas utility for proper orifice size identification.

Canadian High Altitude

Altitude: 0-4500 feet (0-1370 m)

When installing this unit at an elevation above 4500 feet (in Canada), check with local authorities.

Consult your local gas utility for assistance in determining the proper orifice for location.

Preparation

This direct vent gas fireplace and its components are tested and safe when installed in accordance with this Installation Manual. Report to your dealer any parts damaged in shipment, specifically check glass condition. Do not install unit with damaged, incomplete, or substitute parts. Read all instructions before starting installation and follow these instructions carefully during installation to insure maximum benefit and safety. Failure to follow them will void your warranty and may present a fire hazard.

The warranty will be voided by, and the warranter disclaims any responsibility for the following actions:

- Installation of any damaged fireplace or vent system component.
- Modification of the fireplace or direct vent system.
- Installation other than as instructed by Empire Comfort Systems, Inc.
- Improper positioning of the logs, glass door or decorative rock.
- Installation and/or use of any component part not manufactured or approved by manufacturer.

SPECIFICATIONS

	DVD32	DVD36	DVD42	DVD48
Input BTU/Hr Maximum	18000 (NAT, LP)	20,000 (NAT, LP)	25,000 (NAT, LP)	28,000 (NAT, LP)
Input BTU/Hr Minimum (millivolt only)	14,000 (NAT, LP)	14,000 (NAT) 16,500 (LP)	18,000 (NAT) 19,500 (LP)	20,000 (NAT) 22,000 (LP)
KWH (Maximum)	5.3	5.9	7.3	8.2
KWH (Minimum)	4.1	4.1	5.3	5.9
Orifice Natural	#46 (.081”) P254	2.10mm P288	#42 (.0935”) P286	#39 (.0995”) P285
Orifice Propane	#56 (.0465”) P287	#55 (.052”) P182	1.45mm P208	1.55mm P258
Air Shutter Opening Natural	1/16” (1.6mm)	1/16” (1.6mm)	3/16”(4.8mm)	1/8” (3.2mm)
Air Shutter Opening Propane	1/4” (6.3mm)	5/16” (7.9mm)	5/16” (7.9mm)	5/16” (7.9mm)
PROPANE				
Height without standoff	32 3/4” (832mm)	32 3/4” (832mm)	34 3/4” (883mm)	34 3/4” (883mm)
Width	34” (864mm)	37” (940mm)	43” (1092mm)	49” (1245mm)
Depth	16 3/8” (416mm)	16 3/8” (416mm)	16 3/8” (416mm)	16 3/8” (416mm)
Gas Inlet Shutoff Valve (Pipe)	1/2 NPT	1/2 NPT	1/2 NPT	1/2 NPT

NOTICE: Air shutter settings are factory minimum settings. Some venting configurations may require minor air shutter adjustments for optimum performance.

GAS CONVERSION KITS								
Models	**DVD32FP3**	**DVD32FP7**	**DVD36FP3**	**DVD36FP7**	**DVD42FP3**	**DVD42FP7**	**DVD48FP3**	**DVD48FP7**
NAT to LP	18456	32880	18442	32882	18814	31760	18815	31762
LP to NAT	18816	32881	18817	31759	18818	31761	18819	31763

Remote Control Options & Accessories	DESCRIPTION	MODELS USED ON
FRBC	Millivolt Battery Remote ON/OFF	DVD(32,36,42,48)FP(3,7)
FRBTC	Millivolt Battery Remote Thermostat	DVD(32,36,42,48)FP(3,7)
TMW	Millivolt Wireless Wall Thermostat	DVD(32,36,42,48)FP(3,7)
TRW	Millivolt Reed Switch Wall Thermostat	DVD(32,36,42,48)FP(3,7)
FWS-1	Millivolt Wall Switch	DVD(32,36,42,48)FP(3,7)

VENTING OPTIONS	DESCRIPTION
DVVK-4TSP	Top vent kit (horizontal) - 4½" to 6" (114.3 mm to 152 mm) wall thickness
DVVK-4TP	Top vent kit (horizontal) - 8" to 12" (203 mm to 305 mm) wall thickness
DVVK-4RP	Rear vent kit (horizontal) - 5" to 7" (127 mm to 178 mm) wall thickness
DVVK-4VP	Vertical vent kit
DVVK-4F	Horizontal flex vent kit (4' FLEX)
DVVK-4RE	Horizontal round termination (wall thickness up to 13¾")
DV822	Vinyl siding kit for DVVK-4RE

FIREPLACE BARRIER SCREENS		
Screen Model	**Description**	**Fireplace Models Used On**
DVFB32SBL	Fireplace Barrier Screen, Matte Black	DVD32FP
DVFB36SBL	Fireplace Barrier Screen, Matte Black	DVD36FP
DVFB42TBL	Fireplace Barrier Screen, Matte Black	DVD42FP
DVFB48TBL	Fireplace Barrier Screen, Matte Black	DVD48FP

NOTICE: A firescreen is required for operation of the appliance, but are sold separately. Follow the instructions that come with your firescreen for proper installation.

VENT SYSTEM IDENTIFICATION

Begin the vent system installation by selecting the type of venting to be installed and the path that it will take. Verify that clearances are met throughout the path of the venting system. Determine if the fireplace is to be vented out the top or out the rear.

NOTICE: Some fireplaces cannot be vented out the rear of the fireplace.

Determine how the vent system will be terminated out the side of the house or through the roof. Verify clearances for the termination.

When selecting a vent system for use with the fireplace, refer to the "Special Vent Systems" section in this manual to determine what systems are acceptable.

Check all clearances and venting components. Identify if any problems existing in the vent system. Use Figure 22, page 18 for top venting or Figure 32, page 22 for rear venting to eliminate issues after installation. Check pipe diameter on vent system and fireplace to verify the size is the same.

NOTICE: **All outer connection joints must be sealed with aluminum tape, screws or silicone sealant rated above 300°F/149°C. The inner flue joints do not require any sealant.**

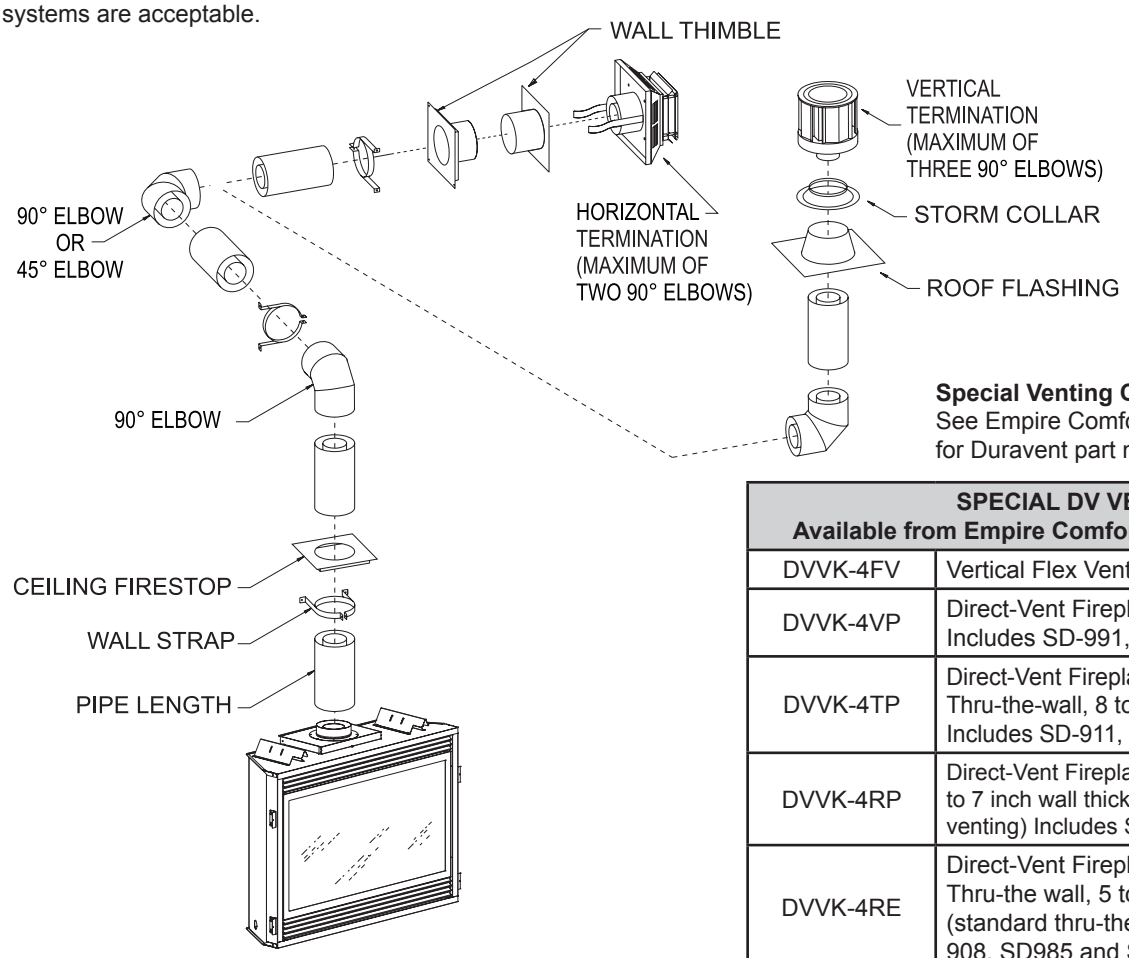

Figure 1

Special Venting Components (Duravent)
See Empire Comfort Systems Retail Price List for Duravent part numbers and pricing.

SPECIAL DV VENT KITS Available from Empire Comfort Systems, Inc. dealers	
DVVK-4FV	Vertical Flex Vent Kit 4" x 7"
DVVK-4VP	Direct-Vent Fireplace Vent Kit - Vertical, Includes SD-991, SD-953, and SD-943
DVVK-4TP	Direct-Vent Fireplace Vent Kit for Top Vent, Thru-the-wall, 8 to 11 inch wall thickness, Includes SD-911, SD-985, SD-990 and SD-942
DVVK-4RP	Direct-Vent Fireplace Vent Kit for Rear Vent, 5 to 7 inch wall thickness, (standard thru-the-wall venting) Includes SD-908, SD-985 and SD-942
DVVK-4RE	Direct-Vent Fireplace Vent Kit for Rear Vent, Thru-the wall, 5 to 13¾ inch wall thickness, (standard thru-the-wall venting) Includes SD-908, SD985 and SD-942
DVVK-4TSP	Direct-Vent Fireplace Vent Kit for Top Vent, Thru-the-wall, 5 to 7 inch wall thickness, Includes SD-908, SD-985, SD-990 and SD-942
VIB6A	Vertical Inlet Baffle Kit for 6⅝ inch diameter.
VIB7A	Vertical Inlet Baffle Kit for 7 inch diameter.

SPECIAL VENT SYSTEMS

THE FOLLOWING VENT SYSTEMS ARE ACCEPTABLE FOR USE WITH THE DVD (32, 36, 42, 48) SERIES FIREPLACES:

- Duravent® Pro 4" - 6 ⅝"
- American Metal Products 4" - 6 ⅝"
- Selkirk Direct-Temp® 4" - 6 ⅝"
- MetalFab SureSeal® 4" - 6 ⅝"
- BDM 4"
- Security Secure Vent® 4" - 6 ⅝"
- Excel DV 4" - 6 ⅝"
- Olympia VENTIS®
- Empire Horizontal Round Termination Kit DVVK-4RE, DVVK-4REVS

Empire Flexvent Kits:

- DVVK-4F, DVVK-4FV, DVVK-4FRE, DVVK-4FREVS

FIREPLACE DIMENSIONS

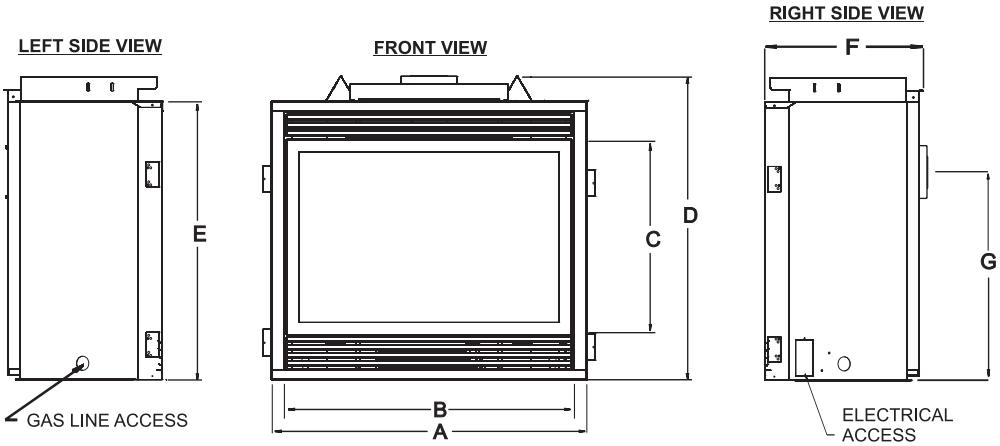

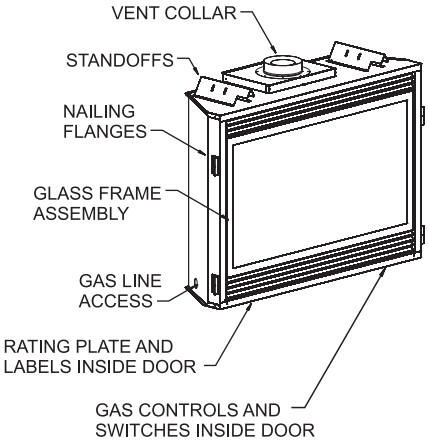

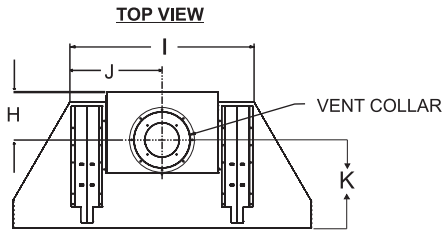

DIM	DVD32	DVD36	DVD42	DVD48
A	34" 864 mm	37" 940 mm	43" 1092 mm	49" 1245 mm
B	31" 787 mm	34" 864 mm	40" 1016 mm	46" 1168 mm
C	23 1/16" 585 mm	23 1/16" 585 mm	25 1/16" 636 mm	25 1/16" 636 mm
D	35 5/8" 905 mm	35 5/8" 905 mm	37 5/8" 956 mm	37 5/8" 956 mm
E	32 3/4" 832 mm	32 3/4" 832 mm	34 3/4" 883 mm	34 3/4" 883 mm
F	16 3/8" 416 mm	16 3/8" 416 mm	16 3/8 416 mm	16 3/8" 416 mm
G	24 1/2" 622 mm	24 1/2" 622 mm	26 1/2" 673 mm	26 1/2" 673 mm
H	7 1/8" 181 mm	7 1/8" 181 mm	7 1/8" 181 mm	7 1/8" 181 mm
I	21 1/2" 546 mm	24 1/2" 622 mm	30 1/2" 774 mm	36 1/2" 927 mm
J	10 3/4" 273 mm	12 1/4" 311 mm	15 1/4" 387 mm	18 1/4" 464 mm
K	9 1/4" 235 mm	9 1/4" 235 mm	9 1/4" 235 mm	9 1/4" 235 mm

Figure 2

CLEARANCES

CLEARANCE TO COMBUSTIBLES	
Back	0" (0 mm)
Side	0" (0 mm)
Floor	0" (0 mm)
Top Stand-off	0" (0 mm)
Top Framing Edge	3" (76 mm)

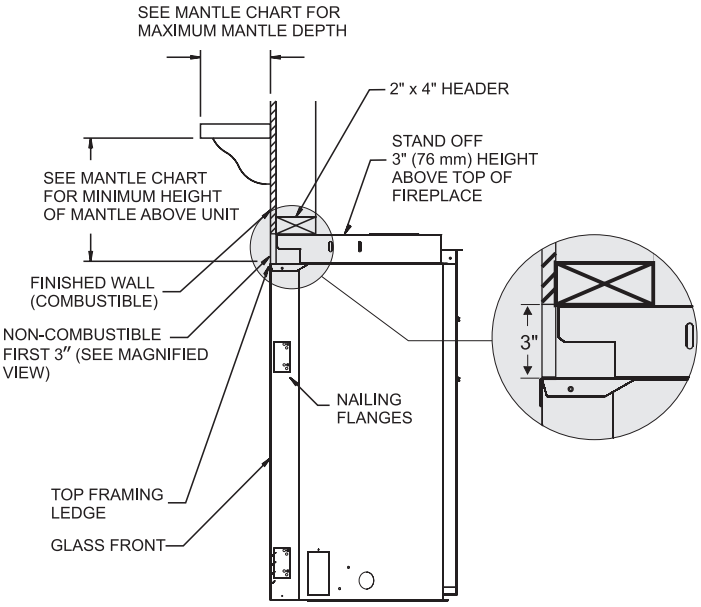

Figure 3

Combustible Material

No greeting cards, stockings or ornamentation of any type should be placed on or attached to the fireplace. The flow of heat can ignite combustibles.

NOTICE: When using Empire EMBF, UMC, and UMF Series Full Mantels with DVD32 and DVD36 Series Fireplaces, combustible clearance may be reduced to 1” clearance from top edge of fireplace face.

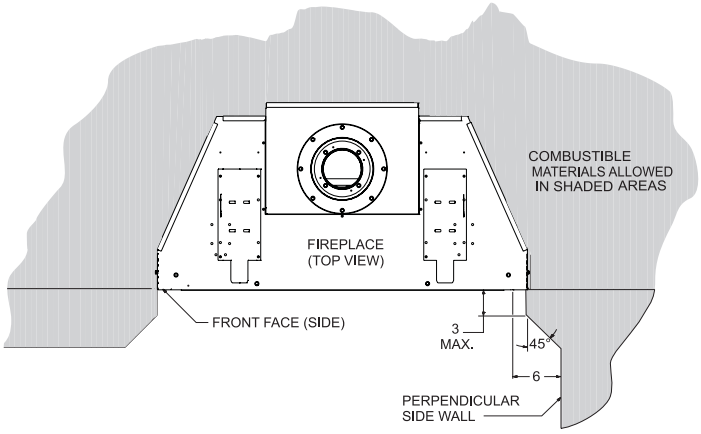

Figure 4

Mantel Chart

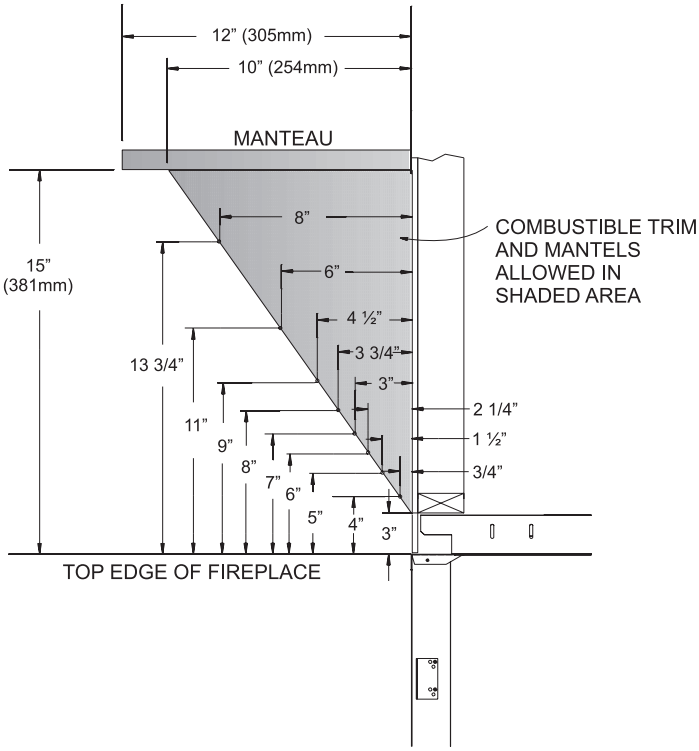

Figure 5

Clearances

Clearance from top front edge of fireplace to ceiling is 36"
Clearance from side of fireplace to adjacent sidewall is 6".

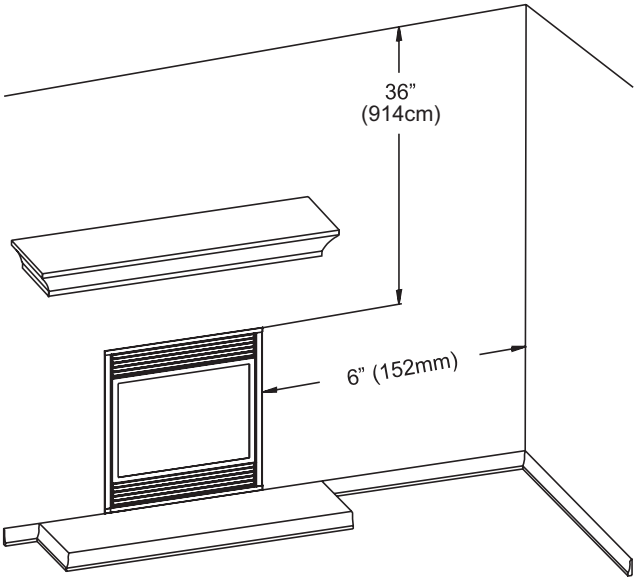

Figure 6

LOCATING FIREPLACE

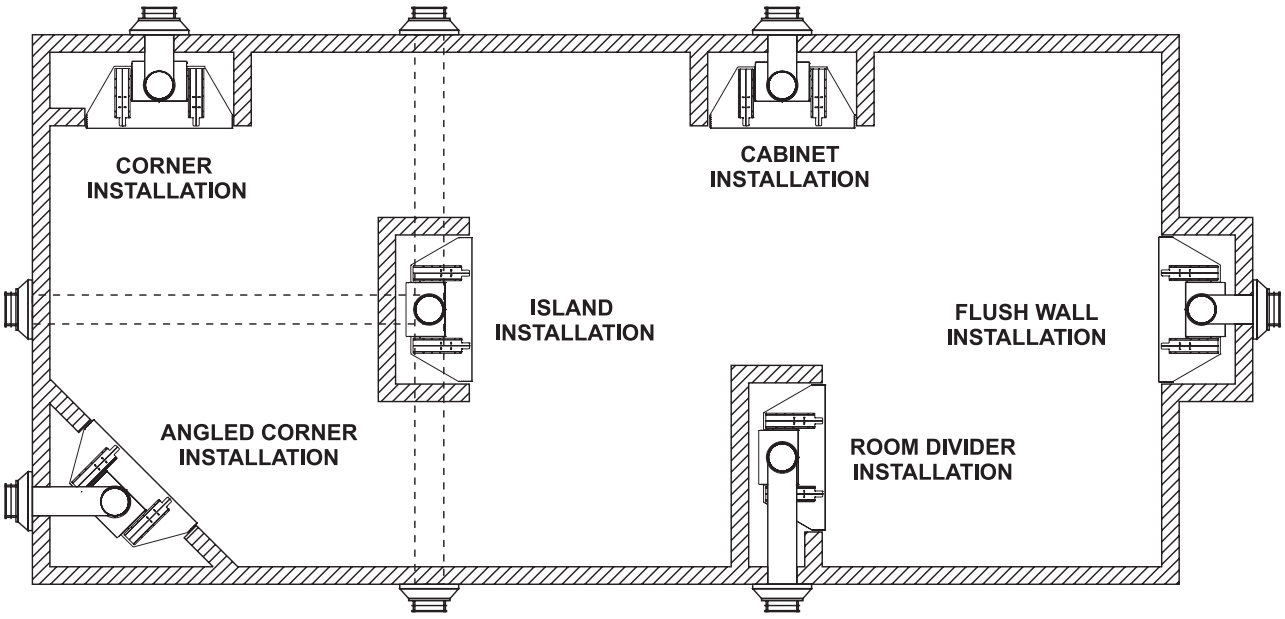

NOTICE: Island and Room Divider installation is possible as long as the horizontal portion of the vent system does not exceed 20 feet with a minimum vertical run of 8 feet. See details in Venting Section.

When you install your Direct Vent Fireplace in Room divider or Flat on wall corner positions, a minimum of six inches clearance must be maintained from the perpendicular wall and the front edge of the appliance.

Figure 7

GAS SUPPLY

The gas pipeline can be brought in through the right or left side of the appliance. Consult the current National Fuel Gas Code, ANSI Z223.1 CAN/CGA-B149 (.1 or .2) installation code.

RECOMMENDED GAS PIPE DIAMETER				
Pipe Length	Schedule 40 Pipe Inside Diameter		Tubing, Type L Outside Diameter	
	Natural	Propane	Natural	Propane
0-10 feet 0-3 meters	1/2” 12.7 mm	3/8” 9.5 mm	1/2” 12.7 mm	3/8” 9.5 mm
10-40 feet 4-12 meters	1/2” 12.7 mm	1/2” 12.7 mm	5/8” 15.9 mm	1/2” 12.7 mm
40-100 feet 13-30 meters	1/2” 12.7 mm	1/2” 12.7 mm	3/4” 19 mm	1/2” 12.7 mm
100-150 feet 31-46 meters	3/4” 19 mm	1/2” 12.7 mm	7/8” 22.2 mm	3/4” 19 mm

NOTICE: Never use plastic pipe. Check to confirm whether your local codes allow copper tubing or galvanized.
NOTICE: Since some municipalities have additional local codes, it is always best to consult your local authority and installation code.

The use of the following gas connectors is recommended:

— ANS Z21.24 Appliance Connectors of Corrugated Metal Tubing and Fittings.

— ANS Z21.45 Assembled Flexible Appliance Connectors of Other Than All-Metal Construction

The above connectors may be used if acceptable by the authority having jurisdiction. The Commonwealth of Massachusetts requires that a flexible appliance connector cannot exceed three feet in length.

FLEXIBLE GAS LINE CONNECTION

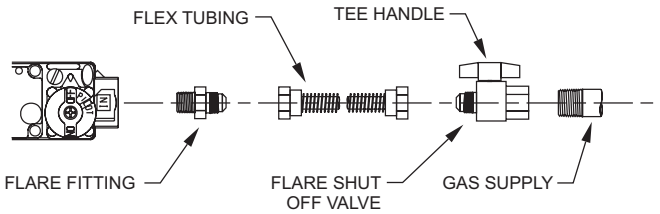

Figure 8

	GAS SUPPLY PRESSURE (inches w.c.)		
	Minimum	Normal	Maximum
Natural Gas	4.5"	7.0"	14.0"
Propane Gas	10.8"	11.0"	14.0"
	MANIFOLD PRESSURE (inches w.c.)		
	Normal (HI)		
Natural Gas	3.5"		
Propane Gas	10.0"		

Installing a New Main Gas Shut-Off

Each appliance should have its own manual gas shut-off. A manual main gas shut-off should be located in the vicinity of the unit. Where none exists, or where its size or location is not adequate, contact your local authorized installer for installation or relocation.
Compounds used on threaded joints of gas piping shall be resistant to the action of liquefied petroleum gases. The gas lines must be checked for leaks by the installer. This should be done with a soap solution watching for bubbles on all exposed connections, and if unexposed, a pressure test should be made.

Never use an exposed flame to check for leaks. Appliance must be disconnected from piping at inlet of control valve and pipe capped or plugged for pressure test. Never pressure test with appliance connected; control valve will sustain damage!

NOTICE: The millivolt gas controls are equipped with a captured screw type pressure test point, therefore it is not necessary to provide a 1/8” test point up stream of the control.

When using copper or flex connector use only approved fittings.

The appliance and it’s individual shut off valve must be disconnected from supply piping system during any pressure testing of that system at test pressures in excess of 1/2 psig (3.5 kPa).

The appliance must be isolated from the gas supply piping system by closing its individual manual shut-off valve during any pressure testing of the gas supply piping system at test pressures equal to or less than 1/2 psig (3.5 kPa).

Attention! If one of the procedures results in pressures in excess of 1/2 psig (14” w.c.) (3.5 kPa) on the fireplace gas valve, it will result in a hazardous condition.

Checking Manifold Pressures

Both Propane and Natural Gas valves have a built-in pressure regulator in the gas valve. Natural Gas models will have a manifold pressure of approximately 3.5” w.c. (.871 kPa) at the valve outlet with the inlet pressure to the valve from a minimum of 4.5” w.c. (1.120 kPa) for the purpose of input adjustment to a maximum of 14.0” w.c. (3.484 kPa). Propane Gas models will have a manifold pressure approximately 10.0” w.c. (2.49 kPa) at the valve outlet with the inlet pressure to the valve from a minimum of 10.8” w.c. (2.68 kPa) for the purpose of input adjustment to a maximum of 14.0” w.c. (3.484 kPa).

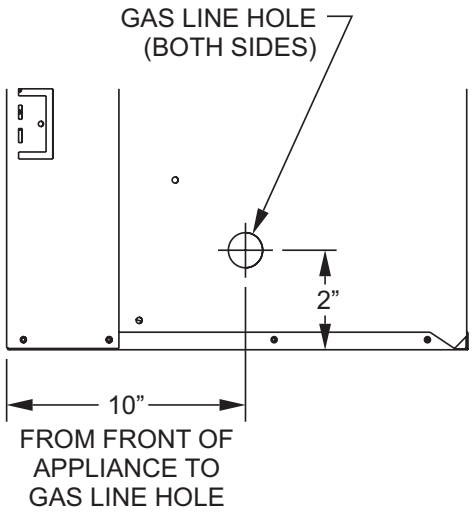

Figure 9

Framing and Finishing

1. Choose unit location.
2. Frame in fireplace with a header across the top. It is important to allow for finished face when setting the depth of the frame.
3. Attach fireplace to frame using adjustable frame. Preset depth to suit facing material (adjustable to 1/2”, 5/8” or 3/4” depths).
4. Use eight 1/2” hex-head screws supplied in hardware package, to screw through slotted holes in drywall strip and then screw into pre-drilled holes on fireplace side. **See Figure 10.** Measure from face of fireplace to face of drywall strip to determine final depth.

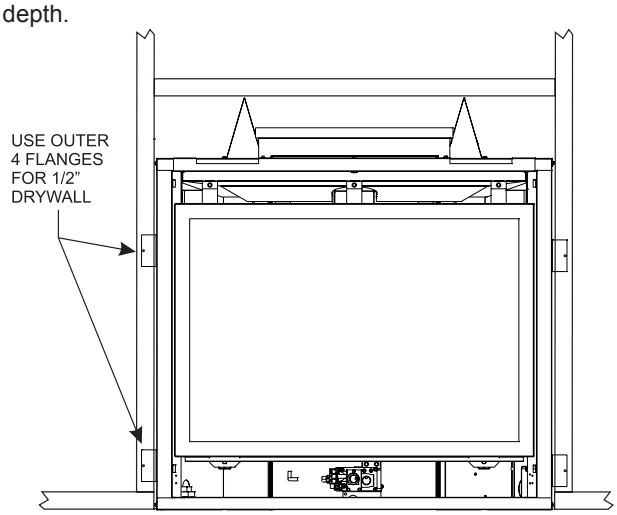

Figure 10

Vent Pipe Clearance

NOTICE: Maintain one inch of clearance around vertical vent pipe. **See Figure 11**. For horizontal vent, maintain a minimum 1” clearance to the bottom and sides of the vent, and 3” clearance to combustibles above the vent pipe. **See Figure 12.**

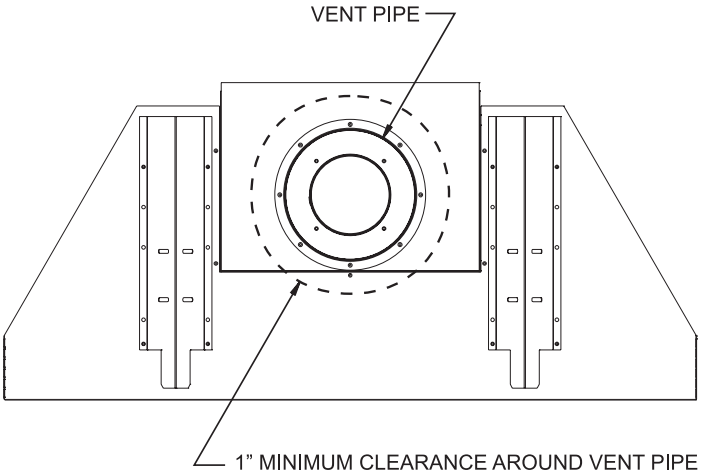

Figure 11

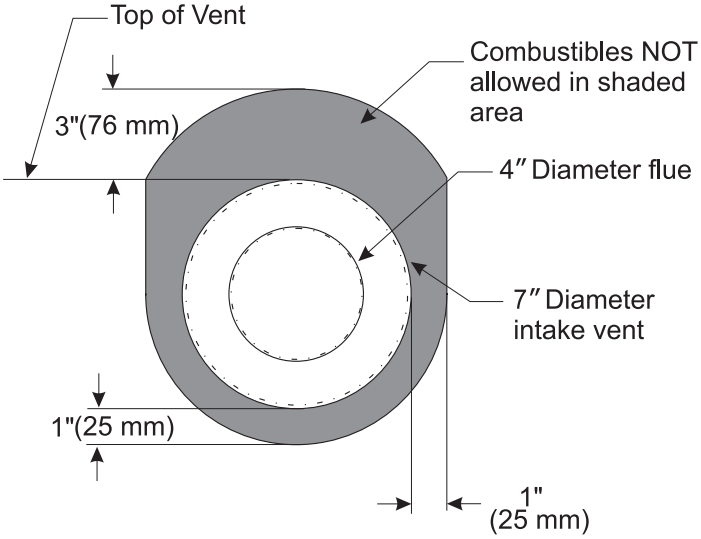

Figure 12

Flush Mount Mantel Installation

The fireplace must extend 3/4" beyond finished wall surface when using a flush mount mantel. Refer to **Figure 13** to locate nailing flanges on fireplace sides. Mark and drill two 1/8" holes into fireplace side to mount each nailing flange. Use eight 1/2" hex-head screws supplied in hardware package to attach nailing flanges to fireplace sides.

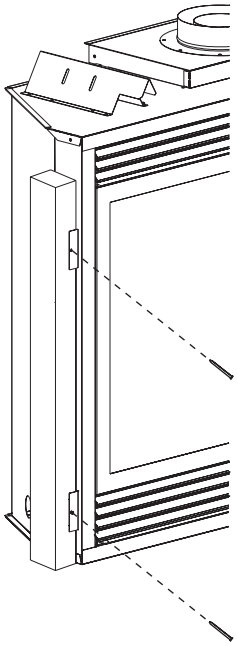

NAIL OR OTHER SUITABLE FASTENER

Figure 13

Attention: When fireplace is installed in optional full cabinet mantel or corner mantel the four nailing flanges shown in **Figure 13** will not be installed on the side of outer casing. The fireplace will be attached to the full cabinet mantel or corner mantel with the two nailing flanges located on the top of the outer casing assembly.

Framing

Fireplace framing can be built before or after the fireplace is set in place. Framing should be positioned to accommodate wall covering and fireplace facing material. The fireplace framing should be constructed of 2 x 4 lumber or heavier. The framing headers may rest on the fireplace standoffs. Refer to **Figure 14** for minimum framing dimensions.

Framing dimension "A" includes a three inch clearance for standoffs on firebox. After installing firebox into framing, the finished wall surface must cover the three inch opening above the firebox.

NOTICE: For finishing to top of fireplace, refer to **Figure 14.**

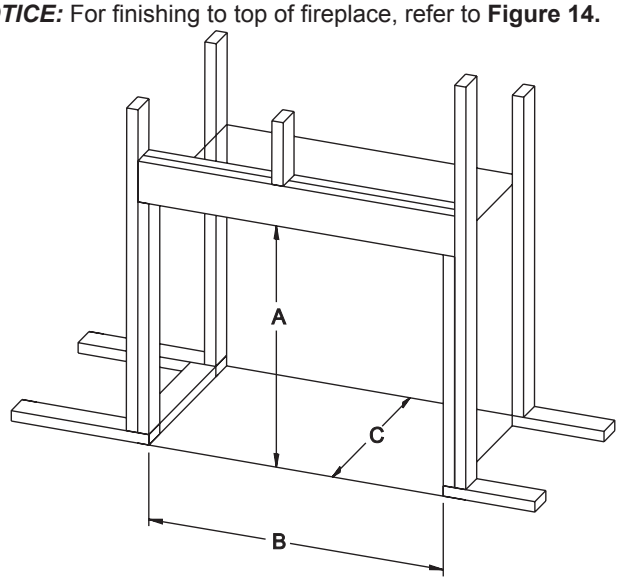

	DVD32	DVD36	DVD42	DVD48
"A"	35 3/4" (908 mm)	35 3/4" (908 mm)	37 3/4" (959 mm)	37 3/4" (959 mm)
"B"	34 3/8" (873 mm)	37 3/8" (949 mm)	43 3/8" (1102 mm)	49 3/8" (1254 mm)
"C"	16 3/8" (416 mm)	16 3/8" (416 mm)	16 3/8" (416 mm)	16 3/8" (416 mm)

Figure 14

Attention: Add 3-3/4" to "A" dimensions when using a flush mantel base.

Attention: If a base or mantel is not used and the appliance is installed directly on carpeting, tile or other combustible material other than wood flooring, it shall be installed on a metal or wood panel extending the full width and depth of the appliance. The vertical dimension in **Figure 14** must be adjusted when a metal or wood panel is placed beneath the appliance.

Finishing

Finish the walls with the material of your choice. **Figure 5** on page 10 shows the minimum vertical and corresponding maximum horizontal dimensions of mantels or other combustible projections above the top front edge of the fireplace.

Only non-combustible materials may be used to cover the black fireplace front.

⚠ WARNING

When finishing the fireplace never obstruct or modify the air inlet/outlet louvers in any manner. Provide adequate clearances around air openings into the combustion chamber.

⚠ CAUTION

If the joints between the finished wall and the fireplace surround (top and sides) are sealed, a 300°F minimum sealant material must be used. These joints are not required to be sealed. Only non-combustible material (using 300°F minimum adhesive if needed), can be applied as facing to the fireplace surround.

Flush Wall Installation

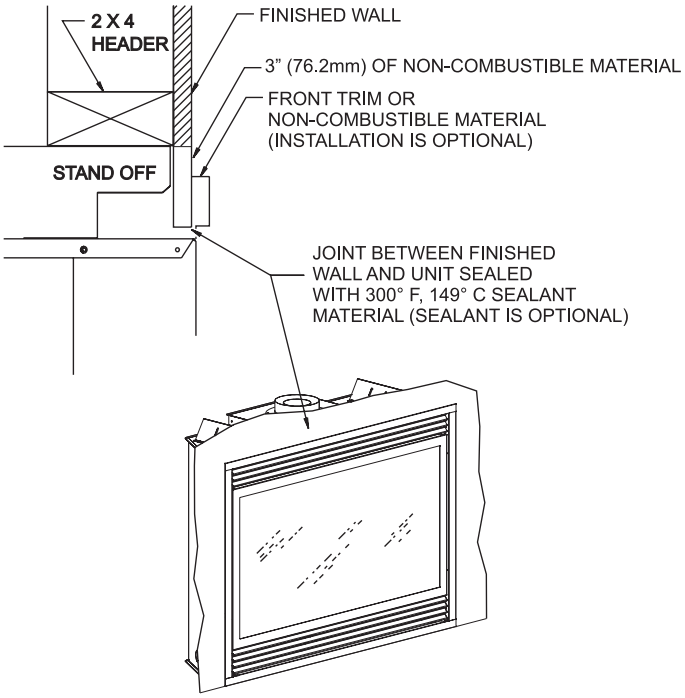

Figure 15

Combustible Surround Installation

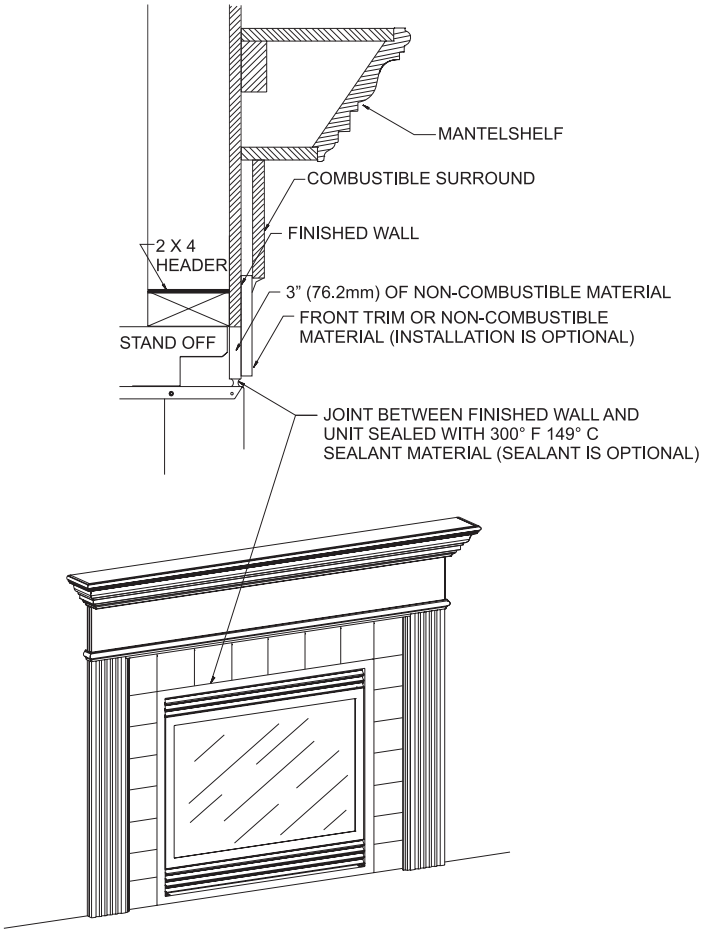

Figure 16

Attention: Cold climate installation recommendation: When installing this unit against a non-insulated exterior wall, it is recommended that the outer walls be insulated to conform to applicable insulation codes.

Vent Runs

In planning the installation for the fireplace, it is necessary to install certain components before the appliance is completely positioned and installed. These include the direct vent system, gas piping for the appliance and the electrical wiring (If the fan option is used).

The appliance can be mounted on any of the following surfaces:

1. A flat, hard combustible (burnable) surface.
2. A raised wooden platform.
3. Four corner supports. (Example: Four concrete masonry blocks.) These supports must be positioned so they contact all four perimeter edges on the bottom of the unit.

VERTICAL, 90° ELBOW WITH HORIZONTAL TERMINATION

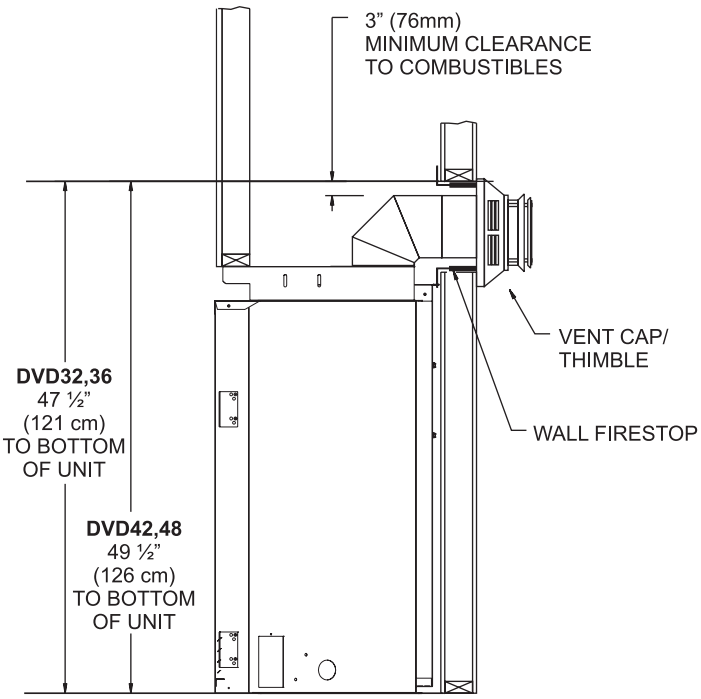

Figure 17

HORIZONTAL ONLY, STRAIGHT OUT THE BACK

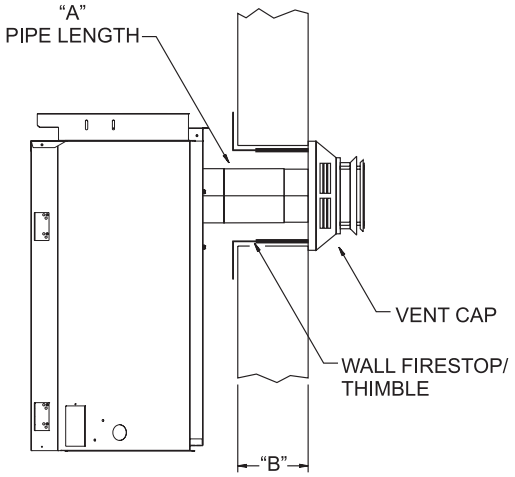

"A"	"B"	Models
6"	5 1/8" to 6 1/2" (130 mm to 165 mm)	DVD 32,36,42,48
9"	8 1/8" to 9 1/2" (206 mm to 241 mm)	DVD 32,36,42
12"	11 1/8" to 12 1/2" (283 mm to 317 mm)	DVD 32,36,42

Figure 18

VERTICAL, 90° ELBOW TO HORIZONTAL OUT THE WALL

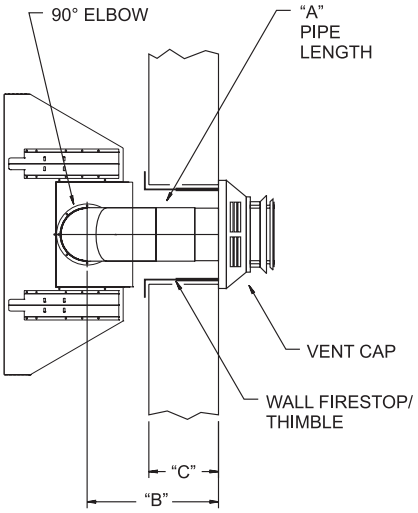

"A"	"B"	"C"
6"	11 1/4" to 12 3/4" (286 mm to 324 mm)	4 3/4" to 6 1/4" (121 mm to 159 mm)
9"	14 1/4" to 15 3/4" (362 mm to 400 mm)	7 3/4" to 9 1/4" (197 mm to 235 mm)
12"	17 1/4" to 18 3/4" (438 mm to 476 mm)	10 3/4" to 12 1/4" (273 mm to 311 mm)

Figure 19

CORNER INSTALLATION VERTICAL, 90° ELBOW TO HORIZONTAL OUT THE WALL

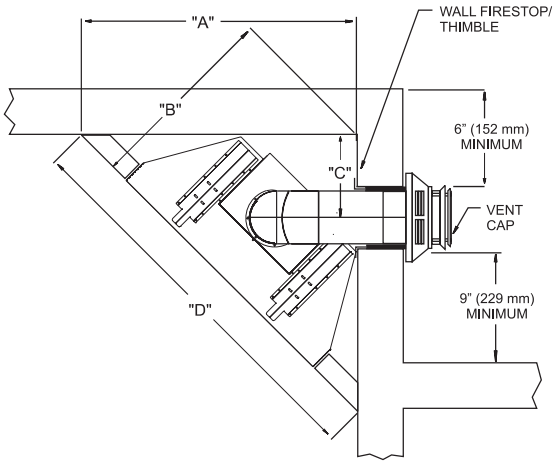

Dim.	DVD32	DVD36	DVD42	DVD48
A	36 1/8" 918 mm	38 3/8" 975 mm	42 1/2" 1080 mm	46 3/4" 1187 mm
B	25 1/2" 648 mm	27 1/8" 689 mm	30 1/8" 765 mm	33 1/8" 841 mm
C	11 1/2" 292 mm	12 5/8" 321 mm	14 3/4" 375 mm	16 7/8" 429 mm
D	51 1/8" 1299 mm	54 1/4" 1378 mm	60 1/8" 1527 mm	66 1/8" 1680 mm

Figure 20

CORNER INSTALLATION HORIZONTAL, 45° ELBOW TO HORIZONTAL OUT THE WALL

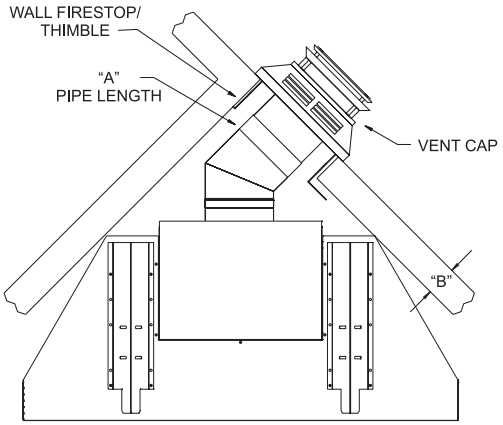

	DVD32	DVD36	DVD42	DVD48
"A"	"B"	"B"	"B"	"B"
6" (152 mm)	4" to 5 1/2" (102 mm to 140 mm)	4" to 5" (102 mm to 127 mm)	n/a	n/a
9" (229 mm)	6" to 7 1/2" (152 mm to 191 mm)	6" to 7 1/2" (152 mm to 191 mm)	4" to 5 1/2" (102 mm to 140 mm)	n/a
12" (305 mm)	9" to 10 1/2" (229 mm to 267 mm)	9" to 10 1/2" (229 mm to 267 mm)	9" to 10 1/2" (229 mm to 267 mm)	n/a

Figure 21

VENTING FIREPLACE - TOP

To Use the Vent Graph

1. Determine the height of the center of the horizontal vent pipe. Using this dimension on the Sidewall Vent Graph, locate the point it intersects with the slanted graph line.
2. From the point of this intersection, draw a vertical line to the bottom of the graph.
3. Select the indicated dimension, and position the unit in accordance with same.

EXAMPLE A:
If the vertical dimension from the floor of the unit is 35 feet, the horizontal run to the outer wall flange must not exceed 6.5 feet.

EXAMPLE B:
If the vertical dimension from the floor of the unit is 6.5 feet, the horizontal run to the outer wall flange must not exceed 14.5 feet.

SPECIAL NOTE: For each 45 degree elbow installed in the horizontal run, the length of the horizontal run MUST be reduced by 18" (457 mm). This does not apply if the 45 degree elbows are installed on the vertical part of the vent system. Reduce 3' for every 90° elbow.

Example: According to the chart the maximum horizontal vent length is 20' and if two 45 degree elbows are required in the horizontal vent it must be reduced to 17'.

The maximum number of 45 degree elbows permitted per side wall installation is two. These elbows can be installed in either the vertical or horizontal run.

NOTICE: On vertical venting the first elbow does not get counted.

☐ Acceptable vertical and horizontal vent run.
(40' maximum vertical and 20' maximum horizontal)

■ Unacceptable vertical and horizontal vent run.

Venting Graph (Dimensions in Feet)

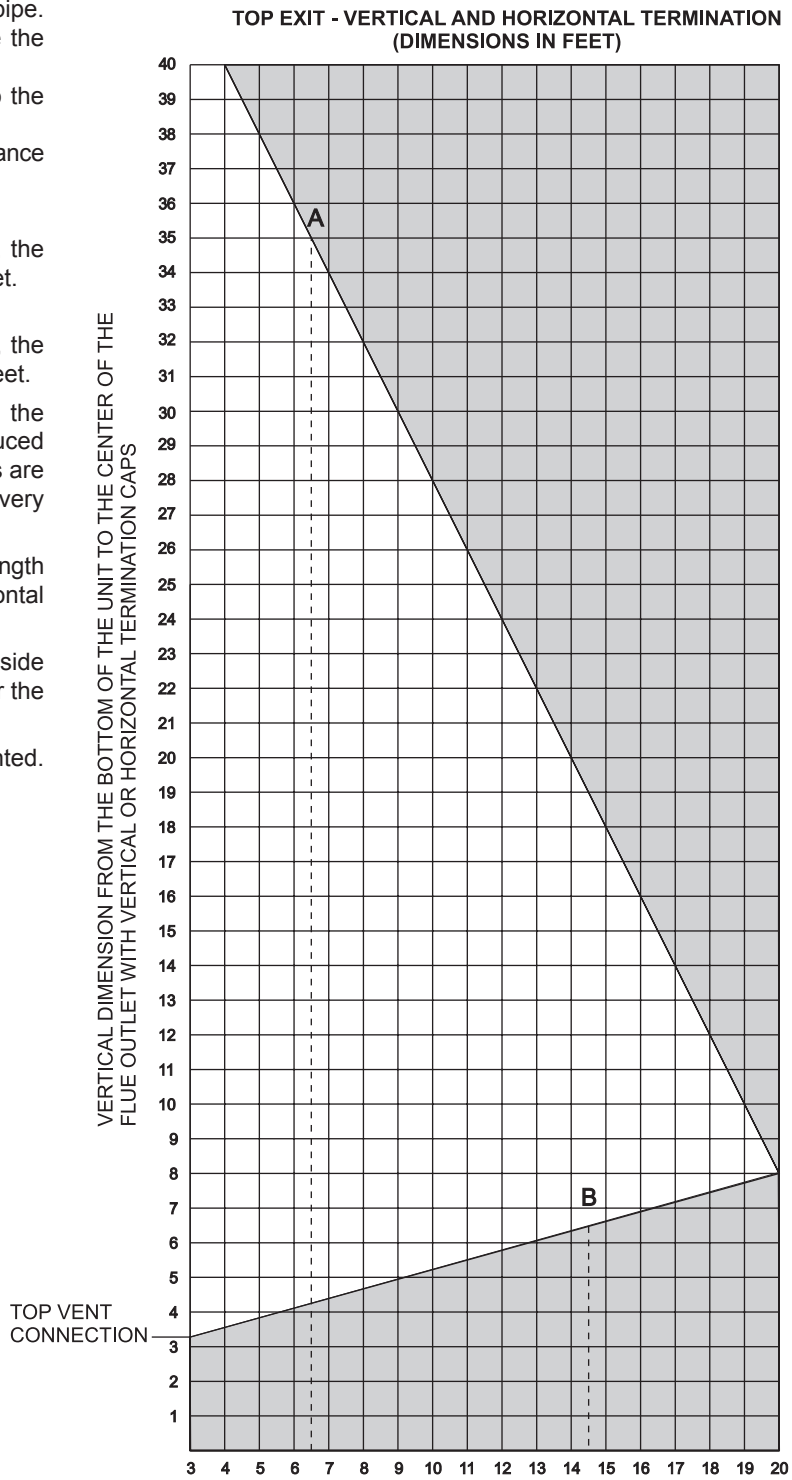

Figure 22

Below Grade Installation

When it is not possible to meet the required vent terminal clearances of 12" (305 mm) above grade level, a snorkel kit is recommended. It allows installation depth down to 7" (178 mm) below grade level. The 7" (178 mm) is measured from the center of the horizontal vent pipe as it penetrates through the wall.

Ensure the sidewall venting clearances are observed. If venting system is installed below ground, we recommend a window well with adequate and proper drainage to be installed around the termination area.

TYPICAL BASEMENT INSTALLATION

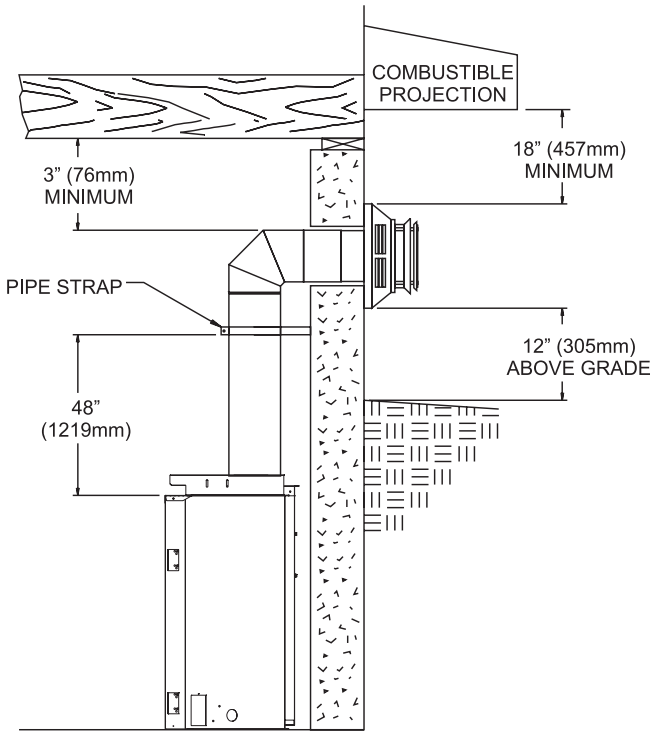

Figure 23

Examples of possible venting systems using one 90° elbow. Eight feet is listed as minimum vertical vent run with 20 feet of maximum horizontal vent run. Vertical dimensions are based on centerline to centerline of pipe. Horizontal dimensions are based on centerline of pipe to end of termination.

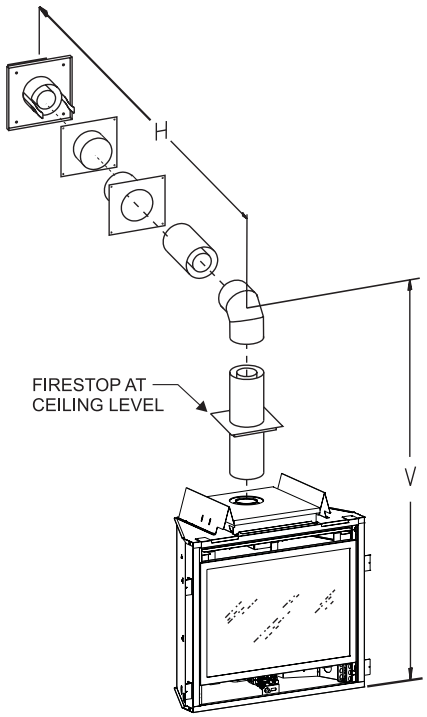

SEE GRAPH FOR PERMISSIBLE "H" AND "V" DIMENSIONS

Figure 24

Examples of possible venting systems using two 90° elbows. V is listed as minimum vertical dimensions and H1 + H2 is listed as total of maximum horizontal dimensions. The maximum vertical and horizontal distances for two 90° elbows as shown in **Figure 25** is 20 feet (6.1 m).

Attention: Refer to **Figure 22** for additional venting requirements.

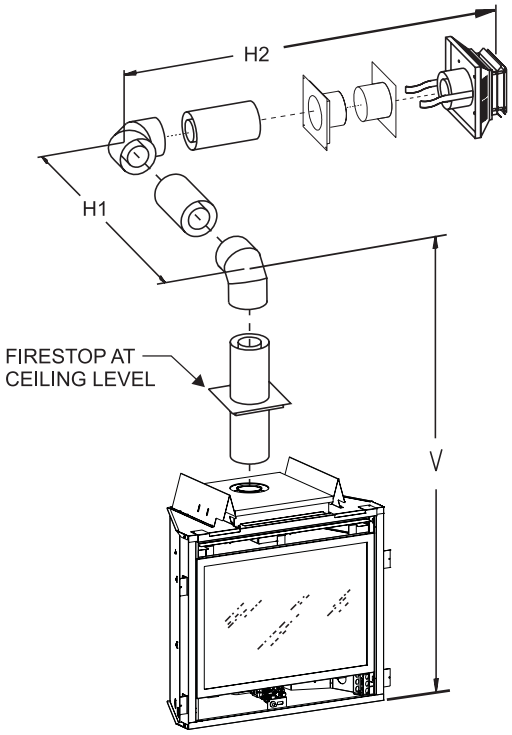

SEE GRAPH FOR PERMISSIBLE "H" AND "V" DIMENSIONS
NOTE: H1 AND H2 MUST BE ADDED TOGETHER TO USE CHART

Figure 25

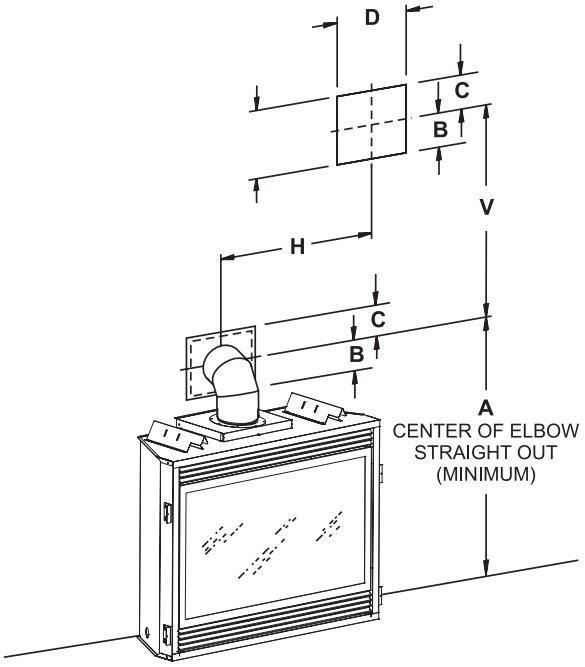

FIREPLACE SERIES	HARD ELBOW DIMENSIONS			
	"A"	"B"	"C"	"D"
DVD32FP	41-1/2" (1054 mm)	4-1/2" (114 mm)	6-1/2" (165 mm)	9 1/8" (232 mm)
DVD36FP	41-1/2" (1054 mm)	4-1/2" (114 mm)	6-1/2" (165 mm)	9 1/8" (232 mm)
DVD42FP	43-1/2" (1105 mm)	4-1/2" (114 mm)	6-1/2" (165 mm)	9 1/8" (232 mm)
DVD48FP	43-1/2" (1105 mm)	4-1/2" (114 mm)	6-1/2" (165 mm)	9 1/8" (232 mm)

FIREPLACE SERIES	FLEX PIPE 90 DEGREE BEND			
	"A"	"B"	"C"	"D"
DVD32FP	43" (1092 mm)	4-1/2" (114 mm)	6-1/2" (165 mm)	9 1/8" (232 mm)
DVD36FP	43" (1092 mm)	4-1/2" (114 mm)	6-1/2" (165 mm)	9 1/8" (232 mm)
DVD42FP	45" (1143 mm)	4-1/2" (114 mm)	6-1/2" (165 mm)	9 1/8" (232 mm)
DVD48FP	45" (1143 mm)	4-1/2" (114 mm)	6-1/2" (165 mm)	9 1/8" (232 mm)

MINIMUM HOLE LOCATION DIMENSIONS FOR THROUGH THE WALL HORIZONTAL INSTALLATIONS WITH 90 DEGREE ELBOW OFF TOP OF FIREPLACE

SEE FIGURE 22 ON PAGE 18 FOR PERMISSIBLE "H" AND "V" DIMENSIONS.

Figure 26

Positioning the Fireplace

Determine the exact position of the appliance so the direct vent termination will be centered (if possible) between two studs. This will avoid any extra framing. All vent kit pipes should be assembled on the unit after the unit is moved into the final position.

Cutting the Hole

After the fireplace has been positioned in its permanent location, the hole through the exterior wall of the house can be cut. This hole must be 11" (280mm) high x 10" (254mm) wide with its center line determined by the amount of vertical rise and horizontal run of the termination. **See Figure 26.** When locating the hole it must be noted that the bottom of the cap must be 12" (305mm) above the ground level, and top of the cap must be no less than 18" (457mm) below a combustible projection, and no closer than 9" (229mm) to any wall running parallel to vent termination. **See Figure 27.**

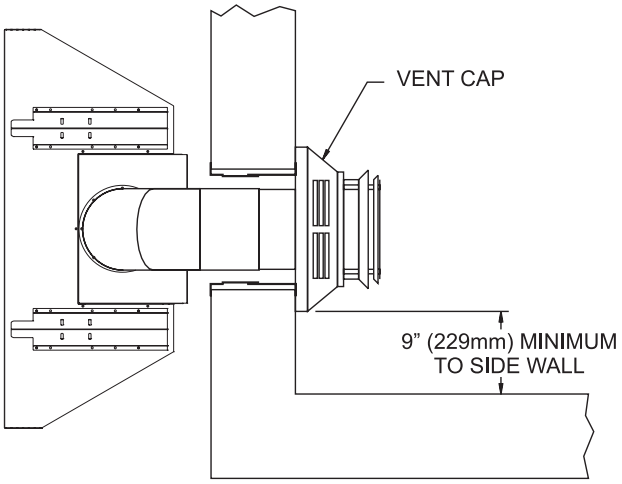

Figure 27

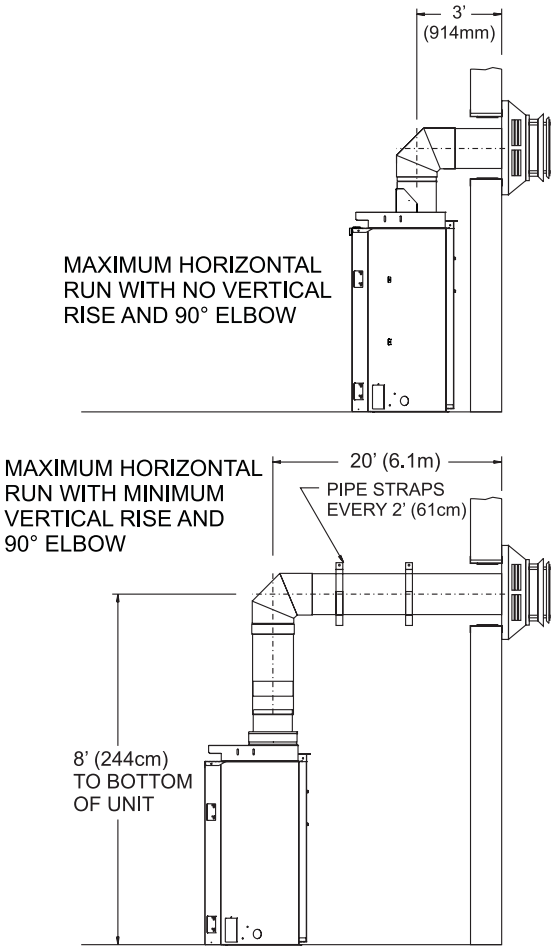

Figure 28

EXAMPLES - TOP VENT RUN

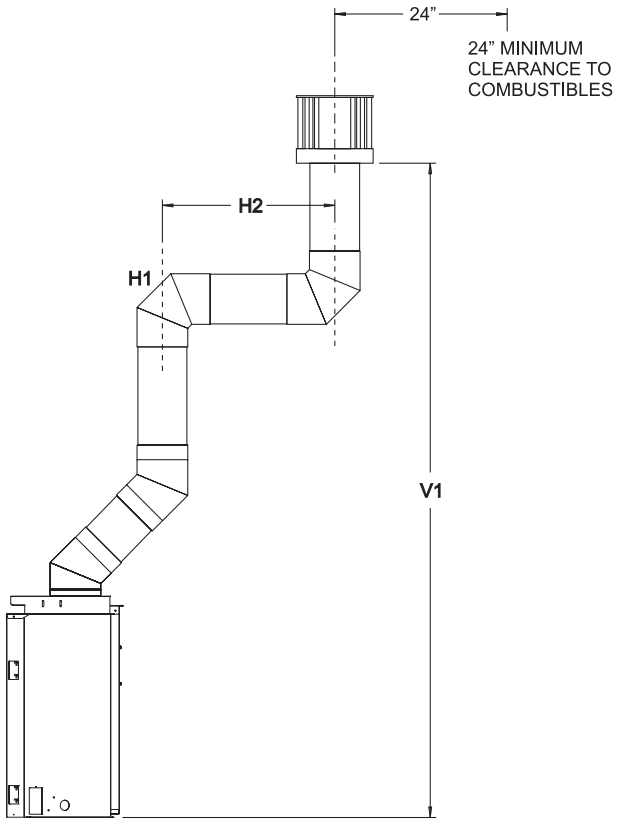

Example
H2 = 2ft
2 - (90° + 90°) = 6ft

H = 8ft V = 15ft

Figure 29

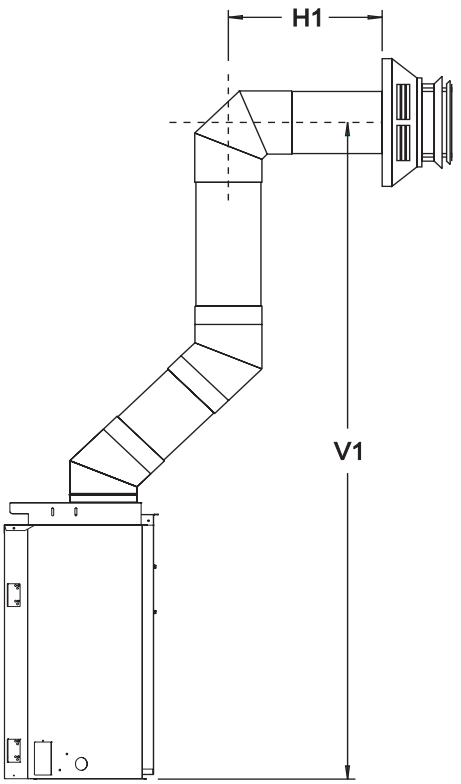

Example
H1 = 2ft
V1 = 20ft

H = 2ft V = 20ft

Figure 31

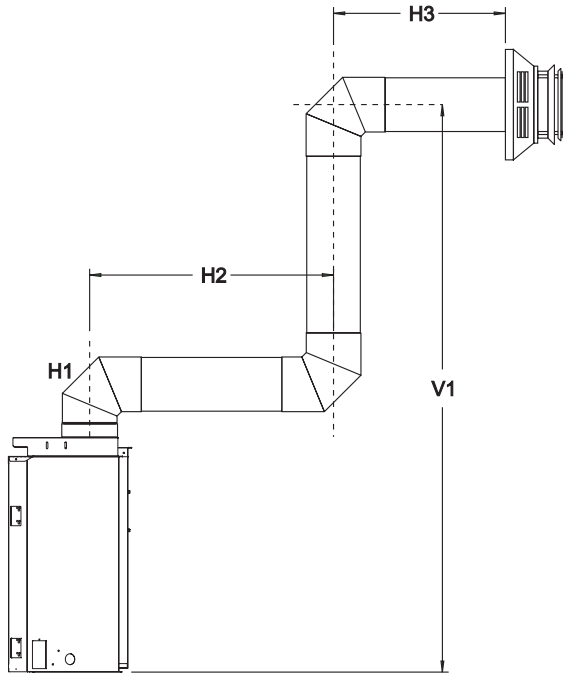

Example
H2 – 3ft, H3 – 1ft = 4ft
(90° + 90° + 90°) = 6ft
V1 = 21ft

H = 10ft V = 21ft

Figure 30

VENTING FIREPLACE - REAR

To Use the Vent Graph

1. Determine the height of the center of the horizontal vent pipe. Using this dimension on the Sidewall Vent Graph, locate the point it intersects with the slanted graph line.
2. From the point of this intersection, draw a vertical line to the bottom of the graph.
3. Select the indicated dimension, and position the unit in accordance with same.

EXAMPLE A:
If the vertical dimension from the floor of the unit is 12 feet, 4 inches the horizontal run to the outer wall flange must not exceed 12 feet, 3 inches.

EXAMPLE B:
If the vertical dimension from the floor of the unit is 6 feet, 9 inches, the horizontal run to the outer wall flange must not exceed 6 feet, 6 inches.

SPECIAL NOTE: For each 45 degree elbow installed in the horizontal run, the length of the horizontal run MUST be reduced by 18" (457 mm). This does not apply if the 45-degree elbows are installed on the vertical part of the vent system. Reduce 3' for every 90° elbow.

Example: According to the chart the maximum horizontal vent length is 20' and if two 45 degree elbows are required in the horizontal vent it must be reduced to 17'.

The maximum number of 45 degree elbows permitted per side wall installation is two. These elbows can be installed in either the vertical or horizontal run.

☐ Acceptable vertical and horizontal vent run.

■ Unacceptable vertical and horizontal vent run.

NOTICE: When rear venting unit, adjust air shutter from 1/16" open up to between 1/8" and 3/16" for Natural Gas.

Adjust air shutter from 1/4" open to between 5/16" and to 3/8" for Propane Gas.

Venting Graph (Dimensions in Feet)

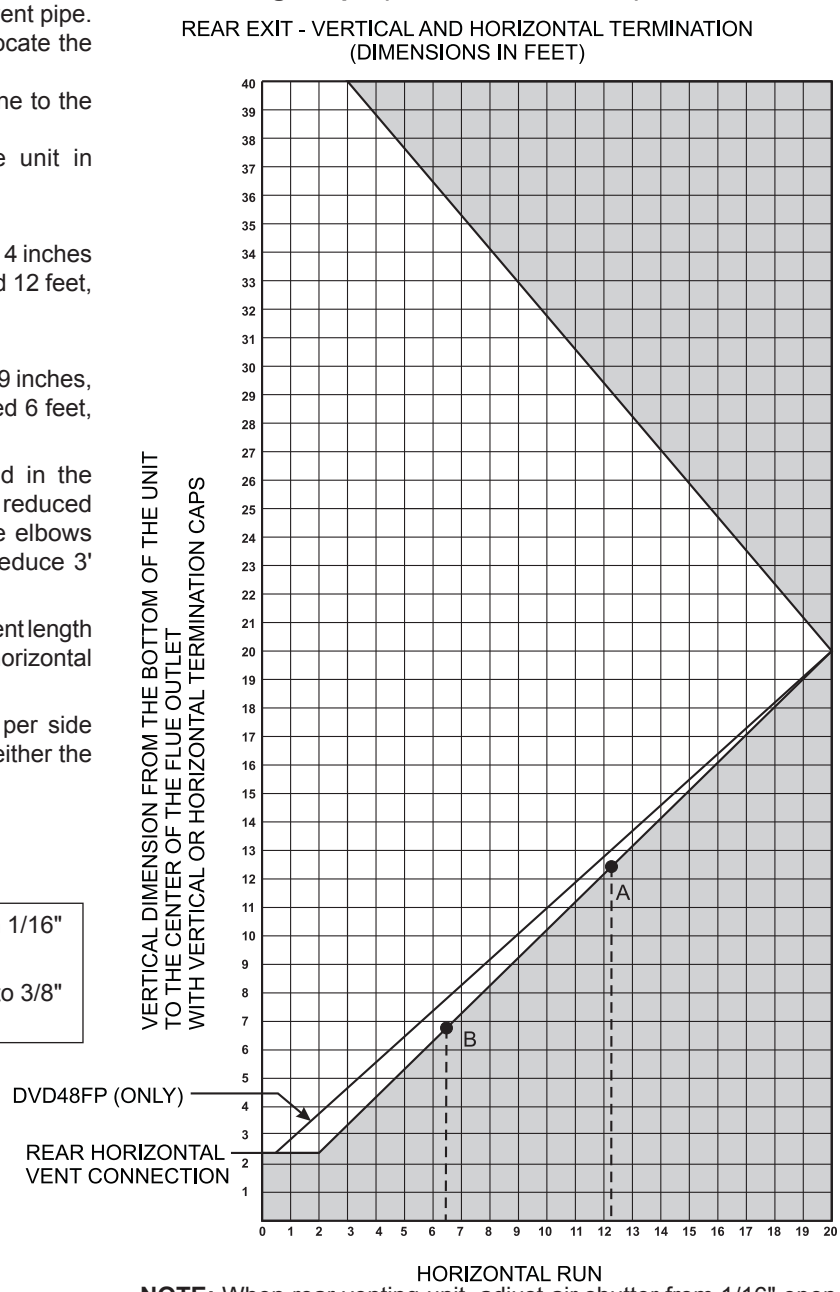

NOTE: When rear venting unit, adjust air shutter from 1/16" open up to between 1/8" and 3/16" for Natural Gas.

Adjust air shutter from 1/4" open to between 5/16" and 3/8" for Propane Gas.

Figure 32

EXAMPLES - REAR VENT RUN

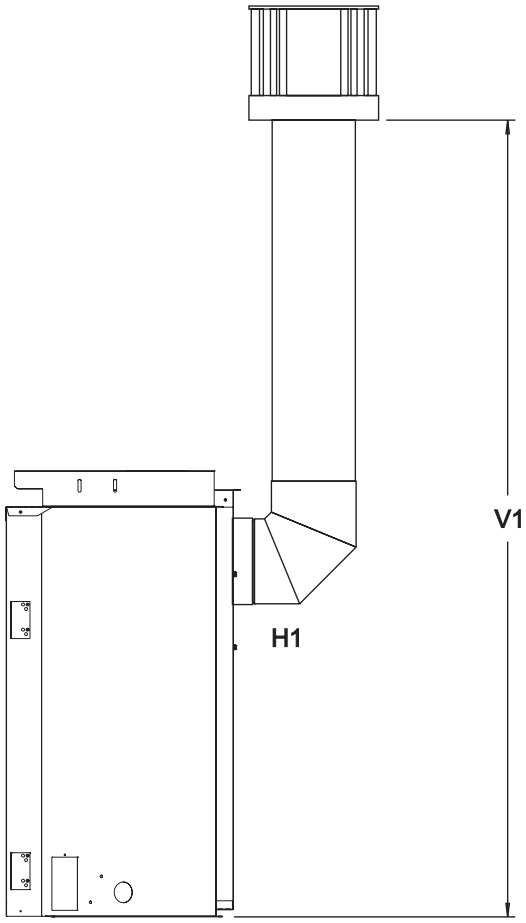

Example
H1 (90°) 3ft
V1 = 22ft
H = 3ft V = 22ft

Figure 33

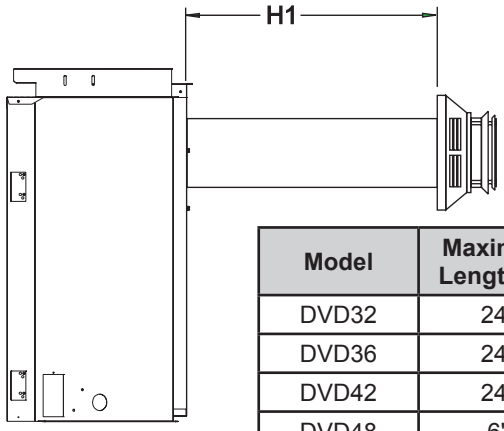

Model	Maximum Length H1
DVD32	24"
DVD36	24"
DVD42	24"
DVD48	6"

Figure 35

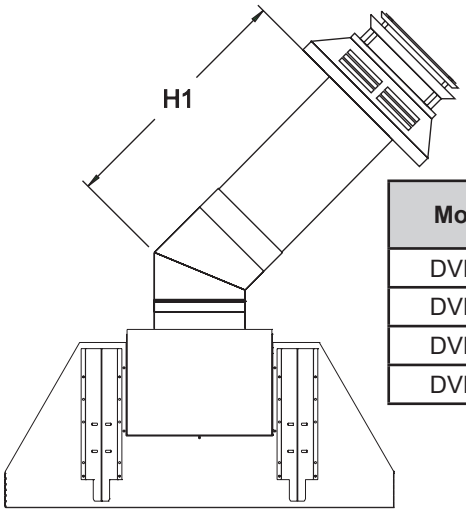

TOP VIEW

Model	Maximum Length H1
DVD32	24"
DVD36	24"
DVD42	18"
DVD48	N/A

Figure 34

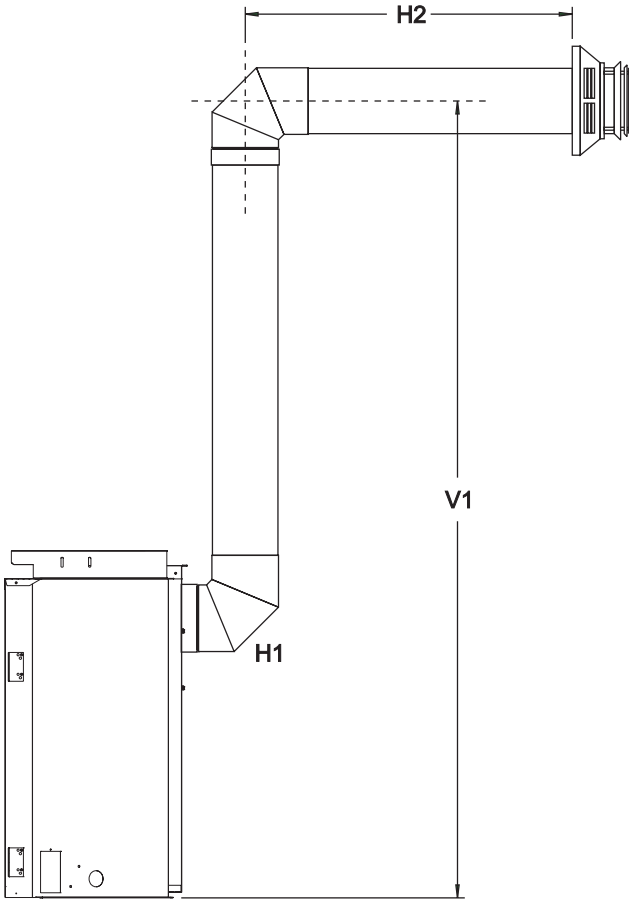

Example
H2 = 4ft
(90° + 90°) = 6ft
V1 = 12ft

H = 10ft V = 12ft

Figure 36

REAR VENT CONVERSION

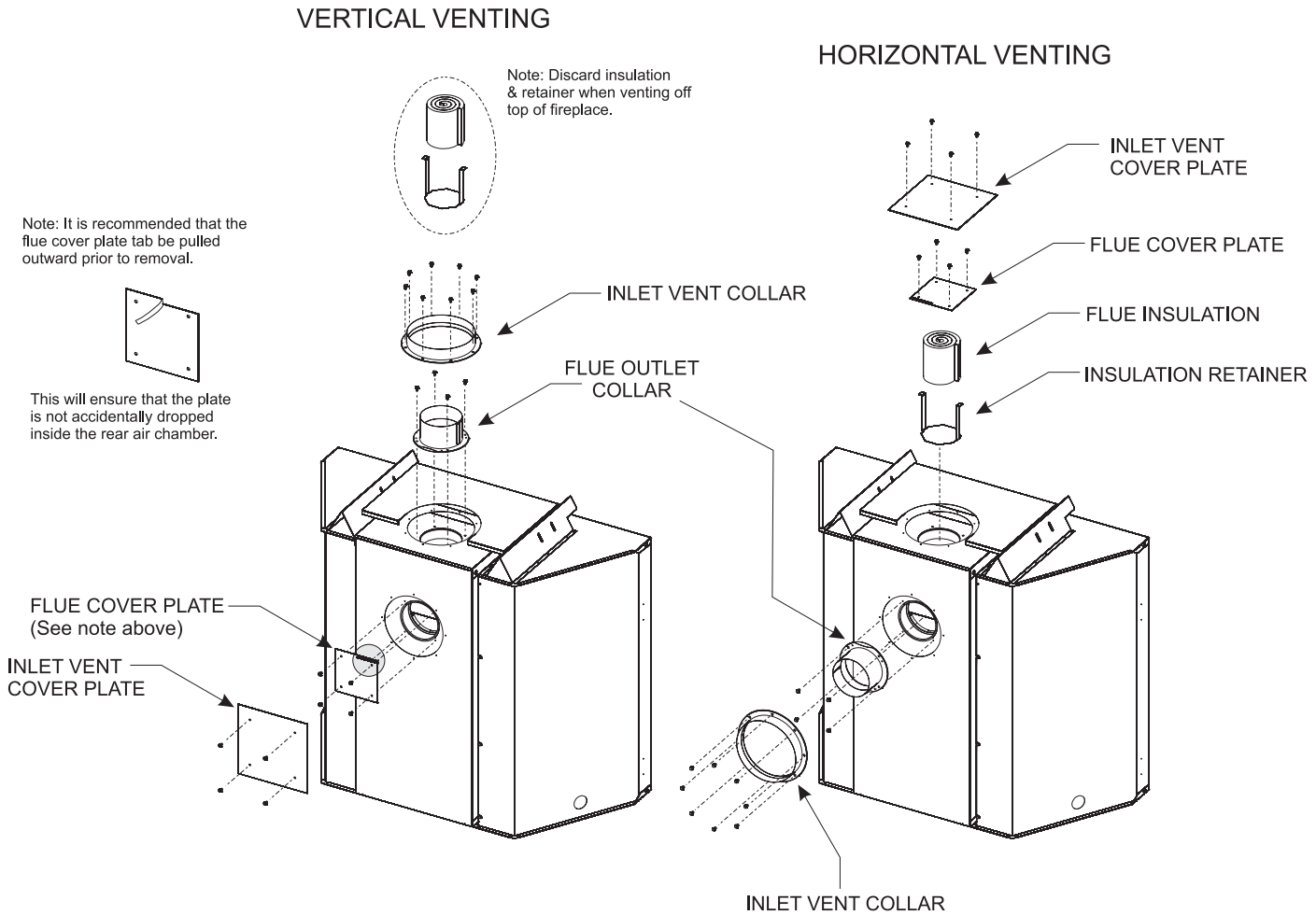

Converting flue take-off to rear venting

When switching out the flue and inlet vent collars to run horizontally off the rear vent, the following steps must be taken.

1. Remove the inlet vent collar (8 screws) and flue collar (4 screws) from the top of the fireplace, and set to the side.
2. Remove the inlet cover plate and flue cover plate located on the back of the fireplace. These will be used to close the top flue and inlet openings.
3. Insert the insulation retainer bracket and insulation into the top flue pipe before reinstalling the flue cover plate over the top flue with 4 screws.
4. Reinstall the inlet cover plate over the top inlet opening with 4 screws. See illustration above..
5. Install the flue collar assembly to the rear flue with 4 screws.
6. Install the inlet vent collar to the rear of the fireplace with 8 screws.
7. This completes the conversion for a rear vent application.

   Note: for top vented installations, the insulation and retainer are to be removed from the flue pipe and discarded.

VENT CLEARANCES

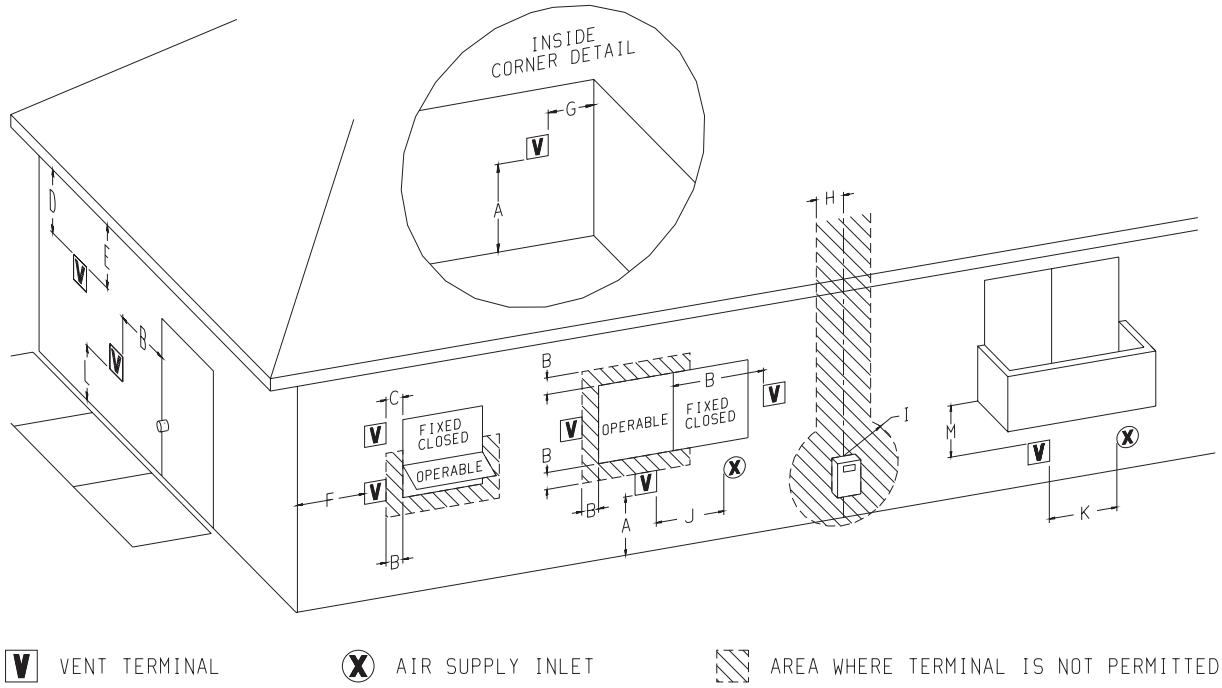

Figure 37

	Canadian Installations1	US Installations2
A= Clearance above grade, veranda, porch, deck, or balcony	12 in (30 cm)	12 in (30cm)
B= Clearance to window or door that may be open	12 in (30 cm) for appliances > 10,000 Btuh (3 kW) and ≤ 100,000 Btuh (30 kW)	9 in (23 cm) for appliances > 10,000 Btuh (3 kW) and ≤ 50,000 Btuh (15 kW), 12 in (30 cm) for appliances > 50,000 Btuh (15 kW)
C= Clearance to permanently closed window	12 in (30 cm)	12 in (30 cm)
D= Vertical clearance ventilated soffit located above the terminal within a horizontal distance of 2 feet (61 cm) from the center line of the terminal	24 in (61 cm)	24 in (61 cm)
E= Clearance to unventilated soffit	12 in (30 cm)	12 in (30 cm)
F= Clearance to outside corner	6 in (15 cm)	6 in (15 cm)
G= Clearance inside corner	9 in (23 cm)	9 in (23 cm)
H= Clearance to each side of center line extended above meter/regulator assembly	3 ft (91 cm) within a height 15 ft (4.5 m) above the meter/ regulator assembly	3 ft (91 cm)

	Canadian Installations1	US Installations2
I= Clearance to service regulator vent outlet	3 ft (91 cm)	3 ft
J= Clearance to nonmechanical air supply inlet to building or the combustion air inlet to any other appliance	12 in (30 cm) for appliances > 10,000 Btuh (3 kW) and ≤ 100,000 Btuh (30 kW)	9 in (23 cm) for appliances > 10,000 Btuh (3 kW) and ≤ 50,000 Btuh (15 kW), 12 in (30 cm) for appliances > 50,000 Btuh (15 kW)
K= Clearance to a mechanical air supply inlet	6 ft (1.83 m)	3 ft (91 cm) above if within 10 ft (3 m) horizontally
L= Clearance above paved sidewalk or paved driveway located on public property	7 ft (2.13 m) †	7 ft (2.13 m) †
M= Clearance under veranda, porch deck, or balcony	12 in (30 cm) ‡	12 in (30 cm) ‡

1	In accordance with the current CSA B149.1, Natural Gas and Propane Installation Code
2	In Accordance with the current ANSI Z223.1/NFPA 54, National Fuel Gas Code
†	A vent shall not terminate directly above a sidewalk or paved driveway that is located between two single family dwellings and serves both dwellings
‡	Permitted only if veranda,, porch, deck, or balcony is fully open on a minimum of two sides beneath the floor.
*	For clearances not specified in ANSI Z223.1/NFPA 54 or CSA B149.1, one of the following shall be indicated:

Clearance in accordance with local installation codes and the requirements of the gas supplier.

ATTENTION

Vinyl Soffit, Vinyl Ceiling, Vinyl Overhang Disclaimer
Clearances are to heat resistant material (i.e. wood, metal). This does not include vinyl. Empire Comfort Systems will not be held responsible for heat damage caused from terminating under vinyl overhangs, vinyl ceilings or vinyl ventilated/unventilated soffits.

Installing Support Brackets

A horizontal pipe support MUST BE used for each 3 feet of horizontal run. The pipe supports should be placed around the pipe and nailed in place to framing members. There MUST BE a 3 inch clearance to combustibles above 6-5/8 inch diameter pipe and elbows and 1 inch clearance on both sides and bottom of 6-5/8 inch pipe to combustibles on all horizontal pipe sections and elbows.

Vertical runs of this vent systems must be supported every 4 feet above the appliance flue outlet by wall brackets attached to the 6-5/8 inch vent pipe and secured with nails or screws to structural framing members.

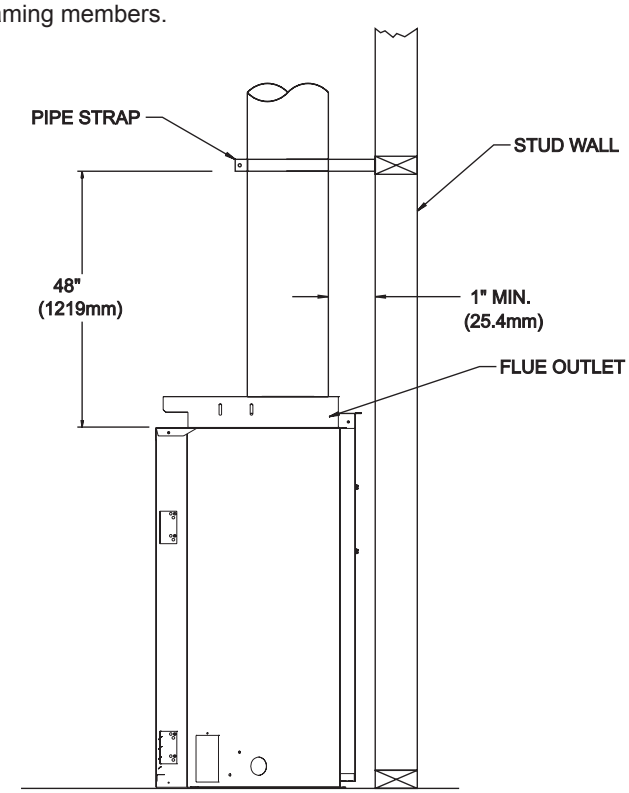

Figure 38

Installing Firestops

Firestops are required for safety whenever the vent system passes through an interior wall, an exterior wall, or a ceiling. These firestops act as a firebreak heat shield and as a means to insure that minimum clearances are maintained to the vent system.

Horizontal Firestops

Horizontal runs in the vent system which pass through either interior or exterior walls, require the use of wall firestops on both sides of the wall through which the vent passes.

Position the firestops on both sides of the framed hole, previously cut. Refer to **Figure 26** on page 20 for sizing information. Secure firestop with nails or screws. The heat shields of the firestops MUST BE placed towards the top of the hole. Continue the vent run through the firestops.

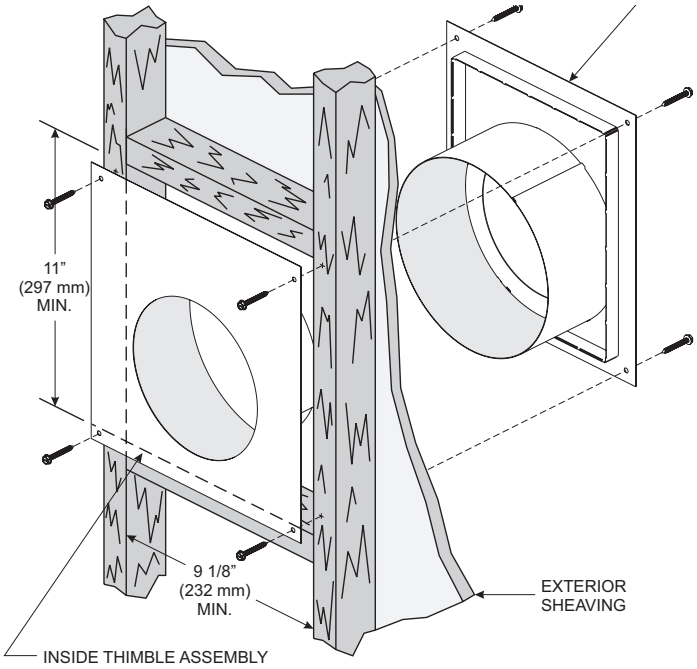

Figure 39

Vertical Firestops

Vertical runs of this system which pass through ceilings require the use of ONE ceiling firestop at the hole in each ceiling through which the vent passes.

Position a plumb bob directly over the center of the vertical vent component and mark the ceiling to establish the center point of the vent. Drill a hole or drive a nail through this center point and check the floor above for any obstructions such as wiring or plumbing runs. Reposition the appliance and vent system, if necessary, to accommodate ceiling joists and/or obstructions.

Cut a 10 inch x 10 inch hole through the ceiling, using the center point previously marked. Frame the hole with framing lumber the same size as the ceiling joists. **See Figure 40.** If the area above the ceiling is NOT an attic, position and secure the ceiling firestop on the ceiling side of the previously cut and framed hole. **See Figure 41.** If the area above the ceiling is an attic, position and secure the firestop on top of the previously framed hole. **See Figure 42.**

NOTICE: Remove insulation from the framed area in the attic before installing the firestop and/or vent pipes.

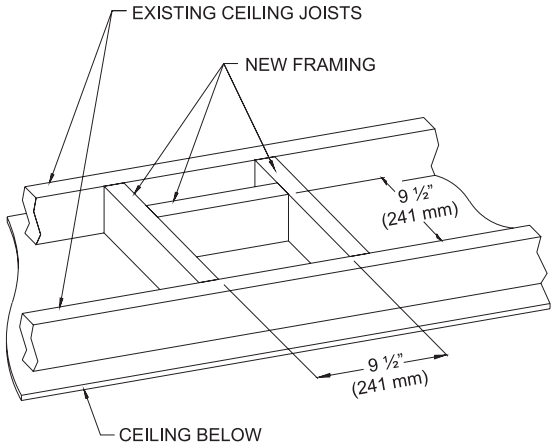

Figure 40

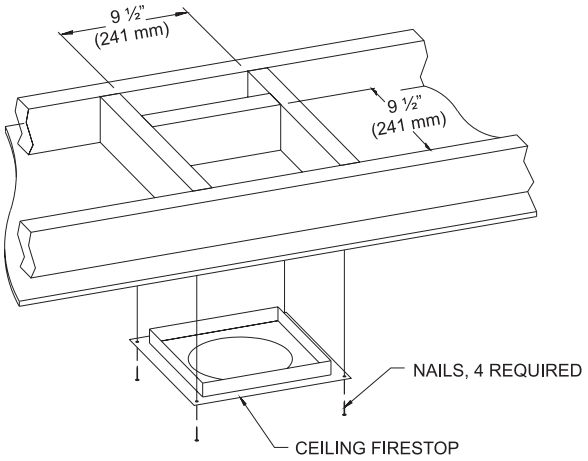

Figure 41

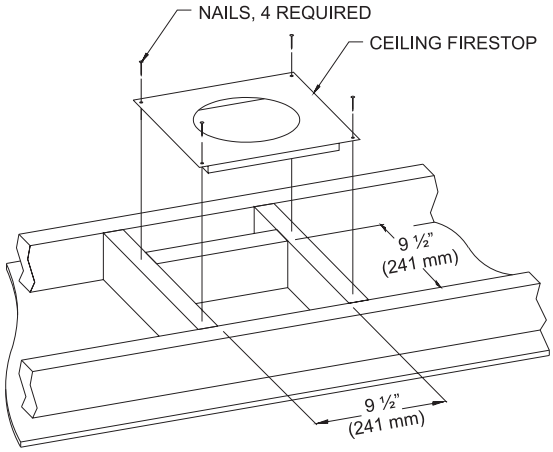

Figure 42

See **Horizontal Termination** Page 29 and **Vertical Termination** Pages 30-31.

TERMINATION CLEARANCES

Termination clearance for buildings with combustible and noncombustible exteriors.

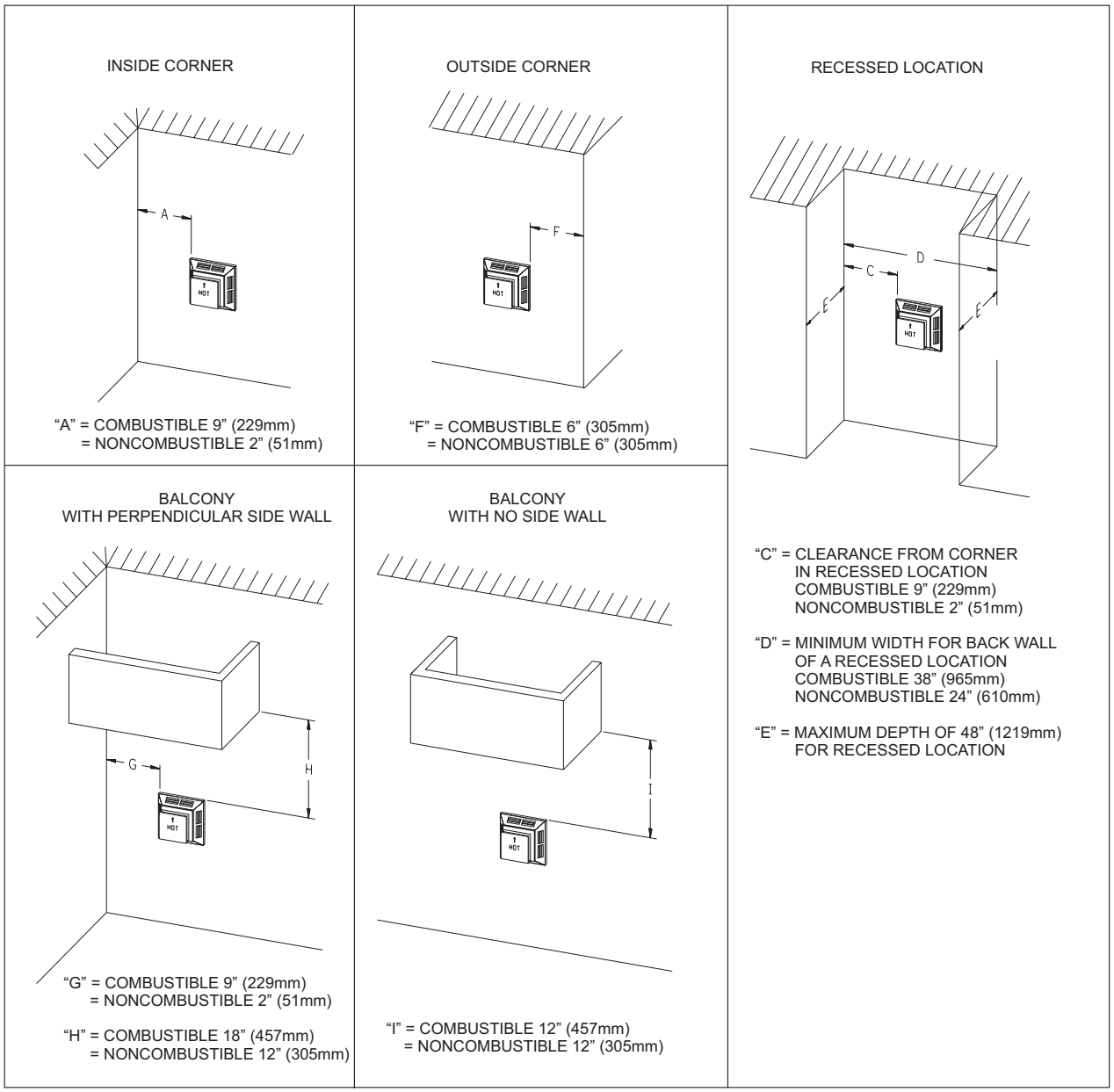

Figure 43

Vertical Sidewall Installations

Important! Minimum clearance between vent pipes and combustible materials is three inches (76 mm) on top, and one inch (25 mm) on bottom and sides.

Important! When vent termination exits through foundation less than 20" below siding outcrop, the vent pipe must extend outward so that the horizontal vent terminal is located flush to, or beyond the outcrop siding.

Information on Various Venting Routes and Components

Important: It is always best to locate the fireplace in such a way that minimizes the number of offsets and horizontal vent length.

Since it is very important that the venting system maintain its balance between the combustion air intake and the flue gas exhaust, certain limitations as to vent configurations apply and must be strictly adhered to.

The graph showing the relationship between vertical and horizontal side wall venting will help to determine the various vent lengths allowable.

The horizontal vent run refers to the total length of vent pipe from the flue collar of the fireplace to the face of the outer wall.

The maximum horizontal vent run is 20 feet (6.10 m) when the vertical vent rise is 8 feet (2.44 m). **See Figure 22.**

Venting terminals shall not be recessed into wall or siding.

HORIZONTAL TERMINATION

NOTICE: Termination cap should pass through the wall firestop from the exterior of the building. Adjust the termination cap to its final exterior position on the building.

⚠ WARNING

Termination cap must be positioned so that arrow is pointing up.

Attach the termination cap with the four wood screws provided. Before attachment of the termination, run a bead of silicone sealant rated above 250°F on its outside edge too, so as to make a seal to the exterior wall.

NOTICE: Wood screws can and should be replaced with appropriate fasteners for use on stucco, brick, concrete or other types of siding.

⚠ CAUTION

If exterior walls are finished with vinyl siding (or materials that could become discolored or warp), it is necessary to install a vinyl siding standoff.

The vinyl siding standoff will be installed between the vent termination and the exterior wall. **See Figure 44.** This horizontal vent termination bolts onto the flat portion of the vinyl siding standoff, so an air space will exist between the wall and the termination cap.

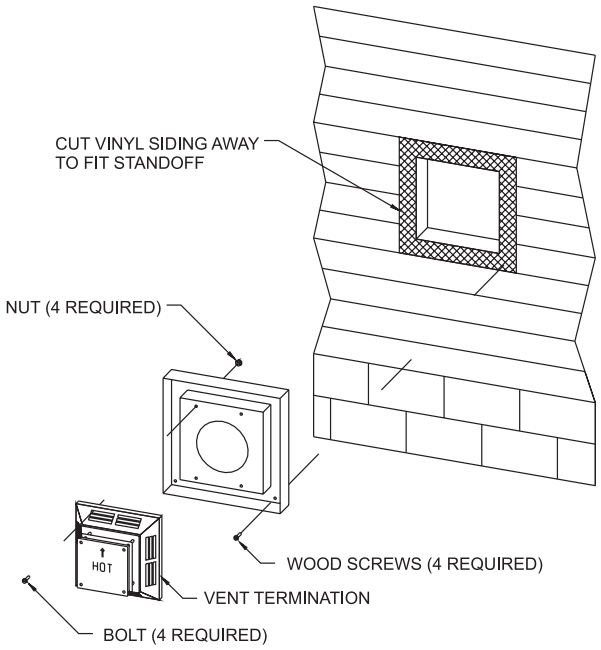

Figure 44

For installations requiring a vertical rise on the exterior of the building, 14-inch and 36-inch tall Snorkel Terminations, as shown in **Figure 45** are available. Follow the same installation procedures as used for standard Horizontal Terminations. If the Snorkel Termination must be installed below grade, (i.e. basement application), proper drainage must be provided to prevent water from entering the Snorkel Termination. Refer to **Figure 46.** Do not attempt to enclose the Snorkel within the wall or any other type of enclosure.

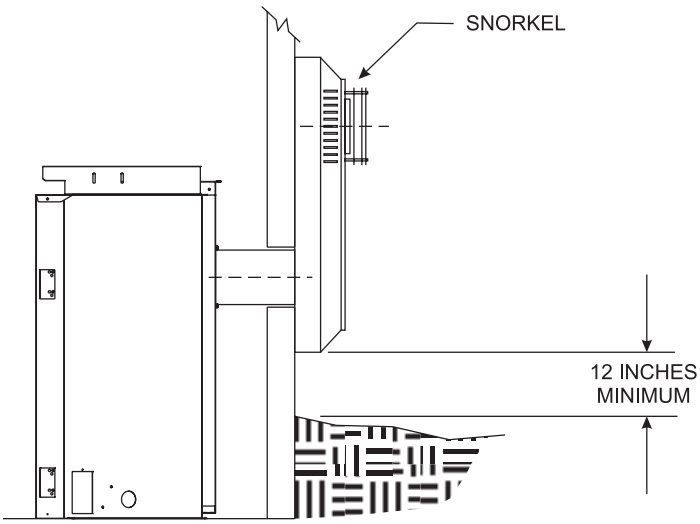

Figure 45

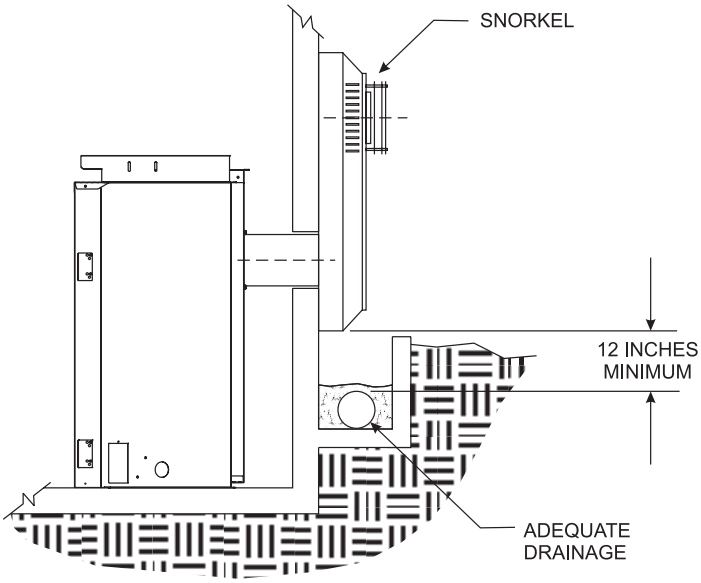

Figure 46

VERTICAL TERMINATION

Locate and mark the center point of the vent pipe using a nail on the underside of the roof. Drive the nail through the center point. Mark the outline of the roof hole around this center point.

NOTICE: Size of the roof hole dimensions depend on the pitch of the roof. There must be a 1 inch clearance (25 mm) to the vertical pipe sections. This clearance is to all combustible material.

Cover the opening of the vent pipe and cut and frame the roof hole. Use framing lumber the same size as the roof rafters and install the frame securely. Flashing anchored to frame must withstand high winds. The storm collar is placed over this joint to make a water-tight seal. Non-hardening sealant should be used to completely seal this flashing installation.

Determining Minimum Vent Height Above the Roof.

WARNING: Major U.S. building codes specify minimum chimney and/or vent height above the roof top. These minimum heights are necessary in the interest of safety. These specifications are summarized in Figures 47A and 47B.

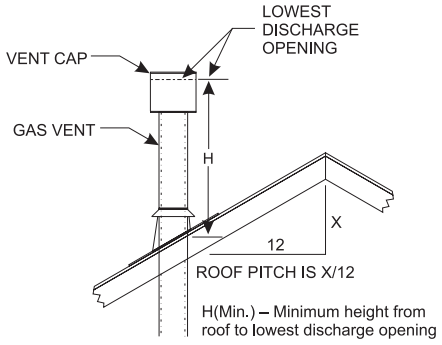

ROOF PITCH	H (Min.)
Flat to 6/12	12" (305 mm)
6/12 to 7/12	15" (381 mm)
Over 7/12 to 8/12	18" (457 mm)
Over 8/12 to 16/12	24" (610 mm)
Over 16/12 to 21/12	36" (914 mm)

Figure 47A

Note that for steep roof pitches, the vent height must be increased. In high wind conditions, nearby trees, adjoining roof lines, steep pitched roofs, and other similar factors can result in poor draft, or down-drafting. In these cases, increasing the vent height may solve this problem.

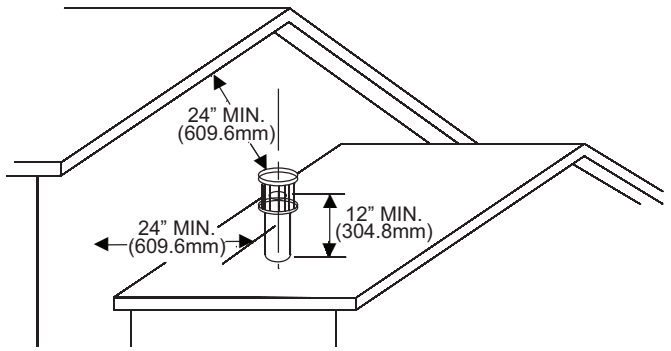

Figure 47B

When terminating the vent cap near an exterior wall or overhang, maintain minimum clearances as shown in **Figure 47B.**

General Maintenance

Conduct an inspection of the venting system semi-annually. Recommended areas to inspect are as follows:

1. Check areas of the venting system which are exposed to the elements for corrosion. These will appear as rust spots or streaks and, in extreme cases, holes. These components should immediately be replaced.
2. Remove the cap and shine a flashlight down the vent. Remove any bird nests or other foreign material.
3. Check for evidence of excessive condensate, such as water droplets forming in the inner liner and subsequently dripping out at joints. Condensate can cause corrosion of caps, pipe and fittings. It may be caused by having excessive lateral runs, too many elbows and exterior portions of the system being exposed to cold weather.
4. Inspect joints to verify that no pipe sections or fittings have been disturbed and, consequently, loosened. Also, check mechanical supports, such as wall straps or plumbers' tape for rigidity.

Venting terminal shall not be recessed into a wall or siding.

A removable panel or other means must be provided in the enclosure for visual inspection of the flue connection.

NOTICE: This also pertains to vertical vent systems installed on the outside of the building.

Slide the vertical vent cap over the ends of the vent pipe and secure. **See Figure 48.**

Installing the Vent System in a Chase

A chase is a vertical box-like structure built to enclose the gas appliance and/or it's vent system. Vertical vent runs on the outside of a building may be, but are not required to be installed inside a chase.

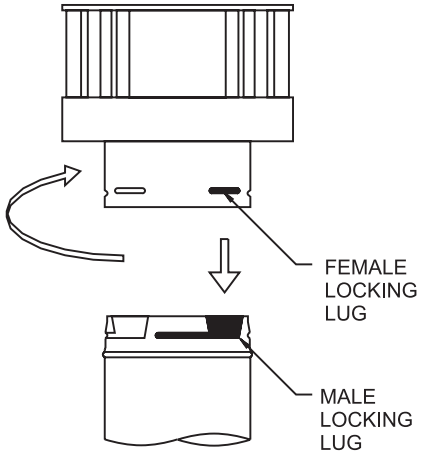

Figure 48

CAUTION: Treatment of firestop spacers and construction of the chase may vary with the type of building. These instructions are not substitutes for the requirements of local building codes. Therefore, your local building codes must be checked to determine the requirements for these steps.

NOTICE: When installing this vent system in a chase, it is always good building practice to insulate the chase as you would the outside walls of your home. This is especially important for cold climate installations. Upon completion of building your chase framing, install the vent system by following the instructions in this manual. Remember to build the chase large enough so that minimum clearance of combustible materials (including insulation) to the vent system are maintained.

Installation of Vertical Inlet Baffle

The vertical inlet baffle is to be used only in a completely vertical vent installation. The vertical inlet baffle can be used when the vertical vent rise is between 10 feet and 40 feet. To maintain the yellow flame in the main burner, purchase Vertical Inlet baffle, DVF-139 from your Empire Comfort Systems, Inc. distributor or dealer for Simpson Duravent only.

In a vertical vent rise the rear (yellow) flame on the main burner can be reduced due to the drawing action from the flue exhaust pipe and the air inlet pipe. A decrease in the height or the appearance of the yellow flame may occur when the vertical vent rise is between 10 feet and 40 feet. To enhance the yellow flame on the main burner, the vertical inlet baffle can be attached to the direct vent high wind vertical top.

Please use the following steps to install the vertical inlet baffle.

1. Place the vertical inlet baffle over the exterior of the air inlet openings on the direct vent high wind vertical top.
2. There are three sections of air openings on the exterior of the air inlet pipe.
   To achieve the **maximum** amount of yellow flame the vertical inlet baffle will cover-up three sections of air openings.
   To achieve the **minimum** amount of yellow flame the vertical inlet baffle will cover-up one section of air openings.
3. Attach vertical inlet baffle to the direct vent high wind vertical top with two 3/8" hex-head screws provided with vertical inlet baffle.
4. Installation of vertical inlet baffle is completed.

PARTS LIST		
Description	**Part Number**	**Quantity Supplied**
Vertical Inlet Baffle	DVF-139	1
3/8" Hex-Head Screw	R-2656	2

Reassembly and Resealing Vent Pipe System

Attach vent pipe to inlet and outlet vent adaptor on fireplace in either the vertical or horizontal position, replace horizontal and vertical pipe lengths, elbows and horizontal or vertical termination kit.

All vent system components lock into place by sliding the concentric pipe section with four equally spaced interior beads onto the appliance collar or previously installed component end with four equally spaced indented sections. When the internal beads of each starting outer pipe line up, rotate pipe section clockwise 90° (approximately 3 inches). The vent pipe is now locked together.

Continue replacing components per the vent system configuration. Be certain that each succeeding vent component is securely fitted and locked into the preceding component in the vent system.

Reassembly and Resealing Gas Accumulation Relief System Glass Frame Assembly and Combustion Chamber

Whenever the glass frame assembly is pivoted open by a delayed ignition in the main burner, the glass frame assembly gaskets and combustion chamber must be examined by a qualified service person for damage. All damaged gaskets on the glass frame assembly and combustion chamber must be replaced by a qualified service person. If damage occurs to the combustion chamber, it must be replaced by a qualified service person. Contact Empire Comfort Systems, Inc. for replacement parts.

Vertical Through the Roof Applications

Your Gas Fireplace has been approved for:

a) Vertical installations up to 40 feet in height.
b) Two sets of 45-degree elbow offsets within these vertical installations. From 0 to a maximum of 8 ft. a vent pipe can be used between elbows.
c) Wall straps must be used to support offset pipe every 4'.

This application will require that you first determine the roof pitch and use the appropriate venting components.

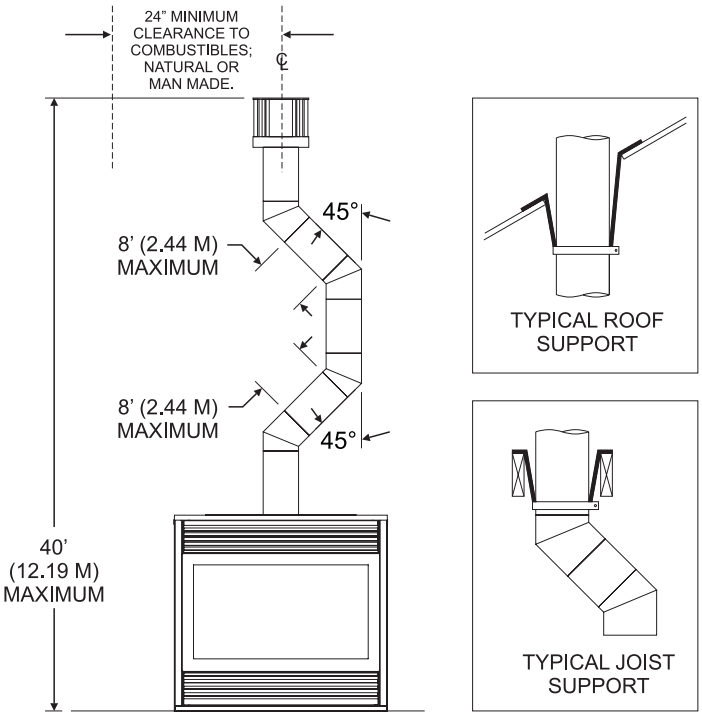

Figure 49

DVVK-4F FLEX VENT INSTRUCTIONS

The **DVVK-4F FLEX VENT KIT** includes the following components:

- (1) Horizontal Termination Cap
- (1) 4-foot section of Flex vent with spacers (4” flue/7” outer pipe)
- (1) 4” diameter Flue adapter collar
- (1) 7” diameter Outer Vent adapter collar
- (1) Wall Firestop/Thimble Assembly
- Hardware pack that includes band clamps and screws

Flex venting can be installed either vertically or horizontally off of the DVD Series fireplaces. When installing a horizontal vent run from top connections, maintain at least ½” rise for every 12” of vent run. When venting horizontal off the rear vent connections, allow a minimum rise of 2”. Refer to Figure 44 when mounting termination near vinyl siding.

CAUTION: Always stretch and secure venting with wire or metal strapping to ensure that the horizontal runs do not sag. If space permits, it is generally easier to attach venting in the top vent configuration.

Because of sharp edges, always use gloves when handling the flex vent components.

Vent connections should overlap a minimum of 1” for proper sealing.

Always follow the general venting requirements for vent terminal location, vent lengths, and clearance to combustible materials.

INSTALLATION

1. Unpack vent components and check that all items are included.
2. Check to see that the vent spacer springs are located around the flue vent at 8” and 12” intervals along its length. **See Figure A.** If not, stretch the spacer springs to about 15” long and wrap them around the flue, then interlock the ends of each spring about 2”. **See Figure B.** Maintain equal distance between spring spacers.
3. Remove the 6-⅝” diameter Vent collar from the fireplace. Replace this collar with the 7” diameter Flex Vent adapter collar provided with the vent kit.
4. Slide the Flex Vent flue pipe into the Outer Flex Vent pipe.

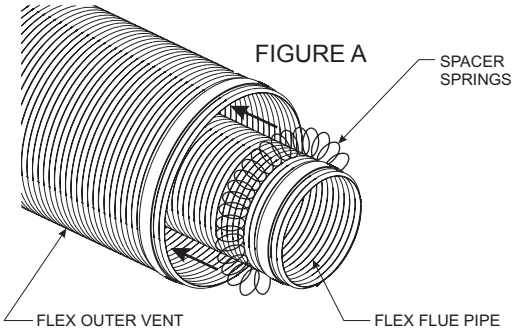

FIGURE A

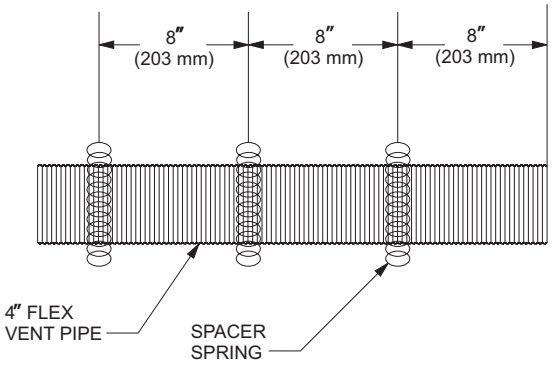

FIGURE B

5. Install the Wall Firestop/Thimble assembly as required through the wall. Refer to the venting charts in the fireplace manual to determine the proper height and size of the vent opening. The minimum opening should be 9” wide by 11” high. The minimum combustible clearance from the horizontal vent is 1” from sides and bottom, and 3” above the vent pipe. **See Figure D.**
6. In most cases, after determining the length of the vent that is needed, it may be easier to install the flue and outer vent pipes to the Termination Cap first, then from the outside, feed the venting through the wall to the fireplace.
7. If the venting is to long, trim off any excess vent before attaching the vent end connectors.

CAUTION: Do not use force when installing the Horizontal Vent Termination into the flex venting. Always stretch venting out first, then cut off excessive vent material prior to sliding the vent termination into the flue and inlet venting. Forcing the termination cap into the flex venting will deform the flue venting, which will restrict the exhaust gases, and cause improper operation of the fireplace.

8. Attach the Termination Cap to the outside of the house.
9. Prior to making the vent connections, apply high temperature sealant (1000 degree F min.) to the vent connections before securing with the band clamps provided. **NOTE:** the flue pipe end **without the adapter** is to be installed to the Termination Cap.
10. Apply sealant to the outside of the flue pipe adapter and connect to the flex flue pipe. Then insert the adapter into the fireplace flue. Secure flue adapter to the fireplace flue with a minimum of two screws provided. **See Figure C.**
11. Attach the Outer Vent pipe to the 7” diameter Collar on the fireplace with a large band clamp provided. Sealant may also be used on the outer vent connections.
12. Check all vent connections for tightness. Make sure horizontal venting has the proper rise and combustible clearances required. Refer to venting charts in fireplace instruction manual.

FIGURE C

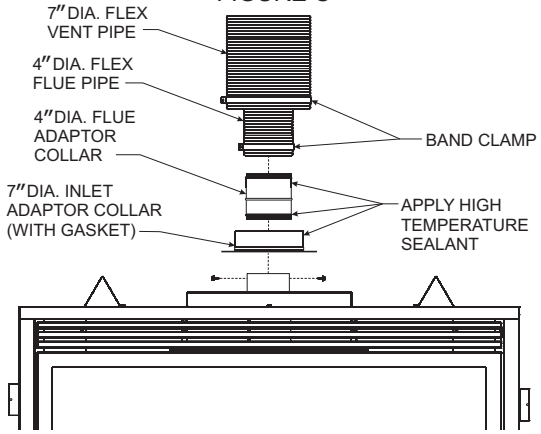

FIGURE D

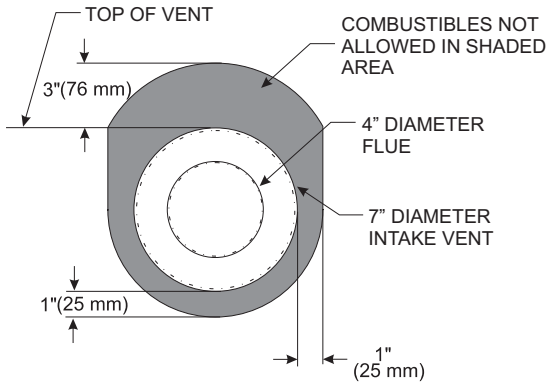

DVVK-4RE VENT KIT INSTALLATION INSTRUCTIONS

CAUTION: Sharp edges, use protective gloves when installing.

Tools Needed for Installation:

- Sheet metal snips
- 5/16” nut driver
- Phillips head screwdriver - #2
- High temperature sealant or furnace cement rated for continuous use at 1,000ºF minimum
- Measuring tape

PARTS VERIFICATION

See parts list on page 35 to verify components included in this vent kit prior to installation.

NOTICE: If installing onto wood, lap, or vinyl siding, the vinyl siding kit should be used (sold separately, part number DV-822).

The vinyl siding vent kit, DV-822, is available from Empire Comfort Systems, Inc. The depth is 3” (76 mm), which enables the vent cap to be extended away from vinyl siding or projections. The wall depth plus the additional 3” (76 mm) depth of the vinyl siding vent cap extension should not exceed a total depth of 13 3/4” (349 mm).

If wall depth exceeds 13 3/4” (349 mm), extend system using 6 5/8” (168 mm) x 4” (102 mm) rigid venting. See Fireplace Instructions for approved lengths. **See Figure 51.**

Installing Wall Thimble/Firestop Assembly

1. Fix fireplace to permanent location. If using rigid venting system, install up to the location where it will exit the building.
2. Cut hole in wall for wall thimble/firestop assembly **(Figure 50)** into your combustible wall. Note: On brick or block exterior wall a 7” (178 mm) diameter hole needs to be cut.

   Measure the total wall thickness to determine whether or not the extension thimble is to be used. If the combustible wall depth is over 5 3/8” (137 mm), then the extension thimble should be used. **See Figure 50.**
3. Install the wall thimble assembly through the framed opening so the firestop plate is on the interior wall. **See Figure 50.** Telescope section should extend all the way through the exterior wall. Attach with four 10 x 1” screws.
4. When placing the vent cap on an exterior wall covered with combustibles such as wood, lap, or vinyl siding, install the vinyl siding kit to the exterior wall sheathing.

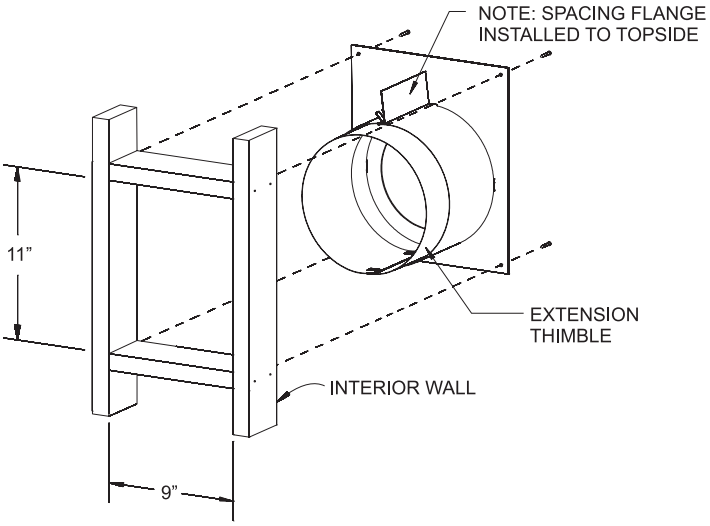

Figure 50

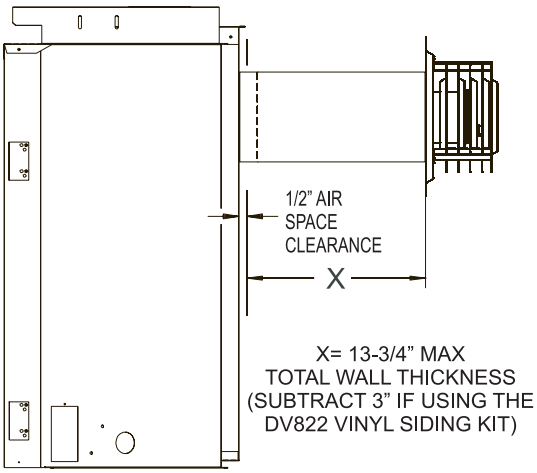

Figure 51

Cutting Vent Tubes

This is the most important part of the installation. With the fireplace (and the rigid venting system if used) fixed to its permanent location, the 6 5/8” (168 mm) diameter air inlet tube and the 4” (102 mm) diameter flue outlet tube are to be marked and cut using the following procedure.

5. Attach the inlet tube to the outside mounting plate. Align tinnerman clips on the tabs of the air inlet tube to the holes on outside mounting plate, and fix with two #10 x 1/2” screws.
6. With the vinyl siding kit installed to wall (if necessary), insert the 6 5/8” (168 mm) diameter tube with outside mounting plate attached through hole in wall. Connect to collar on fireplace or rigid vent system. Measure between wall or vent cap extension and outside mounting plate. **See Figures 52 and 53.**

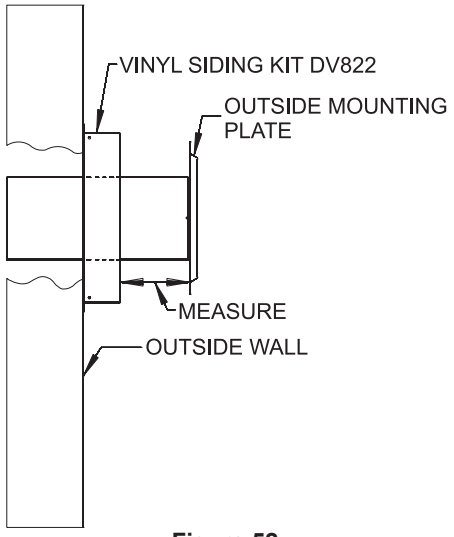

Figure 52

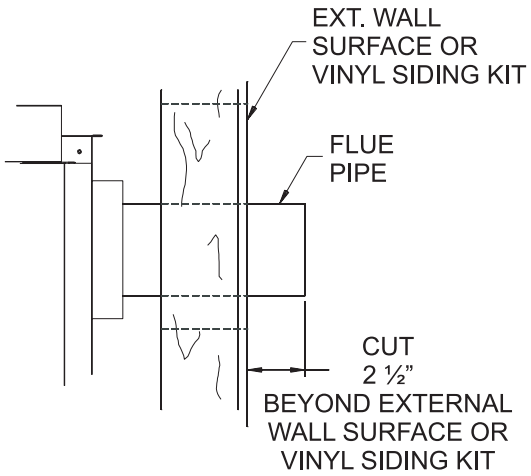

Figure 53

7. Remove outside mounting plate with tube attached from wall. Mark and cut the extra length of the 6 5/8" (168 mm) diameter tube from the opposite end. Do not crimp or enlarge tube.
8. Attach the 4" (102 mm) diameter flue outlet tube onto the rigid venting system or directly to fireplace. Ensure the 4" (102 mm) diameter flue outlet tube is placed as far as possible onto the rigid venting system. Mark the 4" (102 mm) diameter flue outlet tube 2 1/2" (64 mm) beyond the vinyl siding kit or wall. See **Figure 53.** Remove the 4" (102 mm) diameter flue outlet tube from rigid venting system. When installing directly to fireplace, tape gasket needs to be used.
9. Mark or wrap tape completely around the tubes at the marked points to help in making a true cut. Do not crimp or enlarge tubes.
10. From outside: Push the 6 5/8" (168 mm) diameter inlet tube/ mounting plate onto end of rigid venting system to correct position. Fasten the outside mounting plate to the vinyl siding kit or wall with four 10 x 1 1/2" screws. (Ensure upward slope).
11. From inside: Attach the inlet tube to the collar on the back of the fireplace (or the rigid venting system) using three self tapping screws.
12. Seal the 4" (102 mm) diameter flue outlet tube. Follow instructions and diagram. **See Figure 54.**
13. Fasten 4" (102 mm) diameter flue outlet tube in place. Do not "twist" the flue outlet tube into the fireplace collar (or rigid venting system). Hold the tube by the seam and push in using a perpendicular "rocking" motion. This ensures the seam on the tube stay intact.
14. Fasten vent cap end using three 10 x 1/2" screws to mounting plate. **Sealing 4" (102 mm) Diameter Flue Outlet Tube**

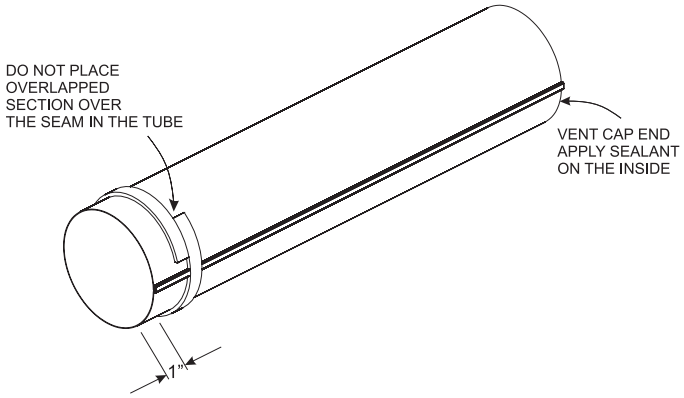

Figure 54

NOTICE: Tape gasket to be applied prior to installing to fireplace flue outlet tube only. Tape gasket should not be used when mating the flue outlet tube to a rigid venting system.

FOLLOW CORRECT OPTION ACCORDING TO VENTING METHOD.

Connecting Directly to Fireplace

If the air inlet and flue outlet tubes are to be connected directly to the unit (no rigid venting system is being used), then the gasket provided must be used to seal the 4" (102 mm) flue outlet tube. Peel the paper off the self-adhesive gasket and then wrap it around the end of the tube (if tube was cut, it is recommended to use cut end) as shown in **Figure 54.** Pull the gasket tight at all times while wrapping it around tube. The gasket ends should align, to form a complete seal. The overlapped section should NOT come in contact with the seam in the tube. Apply high temperature sealant to the opposite end of the tube (on the inside of the tube). The end with the gasket will attach to the back of the unit. Continue with Step 13.

PARTS LIST		
Index No.	**Part No.**	**Description**
1	DV769	Vent Cap Assembly
2	19193	Outside Mounting Plate
3	19194	Air Inlet Tube
4	DV524	Flue Outlet Tube
5	19196	Firestop/Thimble Assembly
6	20527	Gasket

Connecting to Rigid Vent System

If the air inlet and flue outlet tubes are to be connected to a rigid venting system (and not directly to the back of the unit), then **do not** use the gasket provided. High temperature sealant should be applied to the outside of the 4" diameter (102 mm) flue outlet tube (if tube was cut, it is recommended to use cut end) and to the inside of the tube on the end that connects to the vent cap. Continue with step 13.

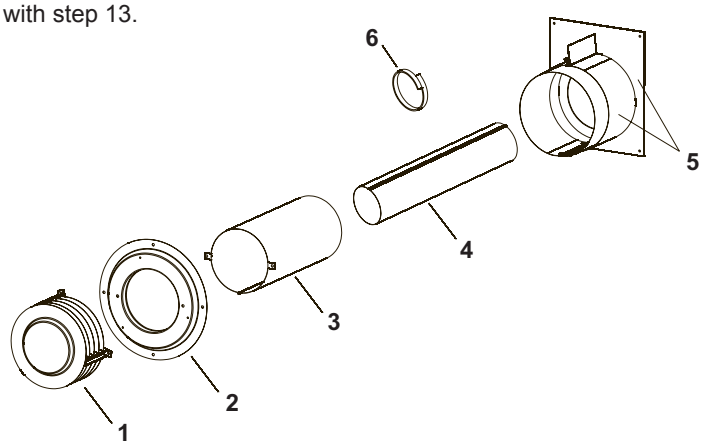

LOG PLACEMENT (5 LOG SET) - DVD(32,36)FP

This fireplace is supplied with a set of five ceramic fiber logs. Do not handle these logs with your bare hands! Always wear gloves to prevent skin irritation from ceramic fibers. After handling logs, wash your hands gently with soap and water to remove any traces of fibers.

The positioning of the logs is critical to the safe and clean operation of this fireplace. Sooting and other problems may result if the logs are not properly and firmly positioned in the fireplace. Please refer to **Figure 55** and **Figure 56** and corresponding WARNING when completing following log placement instructions.

1. Remove top louver, grasp louver, lift and pull forward.
2. Lower bottom louver, lift and hinge forward.
3. Release two glass frame spring clamps at bottom of firebox.
4. Remove glass frame assembly.
5. Place front logs (#1 and #2) between front grate flange and main burner. Align notches on front logs with locator tabs in base.
6. Place middle log (#3) between front and rear loop of burner. Note: Do not place log on top of pilot assembly.
7. Place rear log (#4) on rear log shelf. Bottom flange of log must be placed between the log shelf and burner tube.
8. Place branch (#5) onto (#1) log and flat area on (#3) log. The bottom of the branch is to be placed behind the grate tang that is second from the left.
9. Place decorative rock in front of grates and sides of main burner pan.

ATTENTION: Do not place decorative rock on logs or burner. The decorative rock should only be placed on the fireplace floor.

EMBER MATERIAL PLACEMENT ON BURNER

10. After all logs are positioned properly, apply glowing ember material to the front burner port area. To apply, carefully separate the ember material into small amounts no larger than "dime size" pieces. Fluffed up pieces one layer thick on top of the burner generally work best, and will provide the best ember glow. Do not place ember material more than one layer thick. No more than one small packet of ember material (part no. 15999) evenly placed on the burner, is recommended on DVD32 and DVD36 models. Using additional ember material will decrease the amount of ember glow effect. Extra ember material should be saved for future application as necessary. **See Figure 58.**
11. Replace glass frame onto firebox.
12. Secure the two glass frame spring clamps at bottom of firebox.
13. Align the tabs on top louver brackets with slots in front posts to secure top louver.
14. Close bottom louver. Lift slightly to engage the end tabs into the slots in fireplace sides to close louver panel.

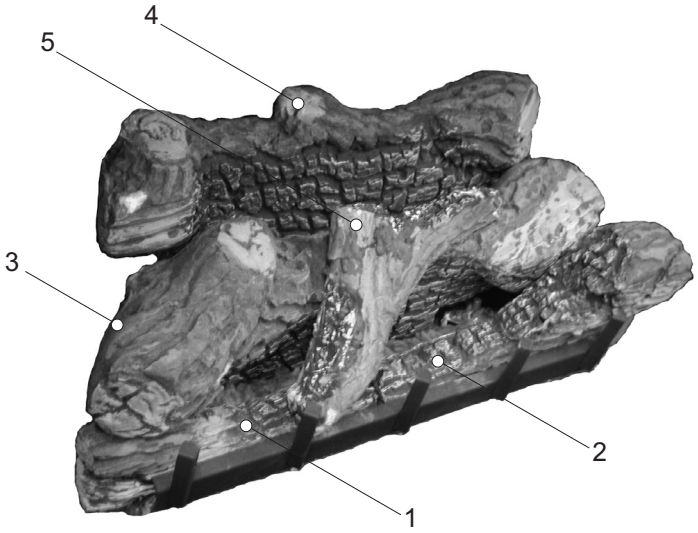

Figure 55

WARNING: Failure to position the parts in accordance with this diagram or failure to use only parts specifically approved with this appliance may result in property damage or personal injury.

Attention: Do not use **Figure 55 or Figure 56** to order logs. Refer to parts lists and parts views on pages 58 to 59 to order logs and/or ember material for your appropriate fireplace model.

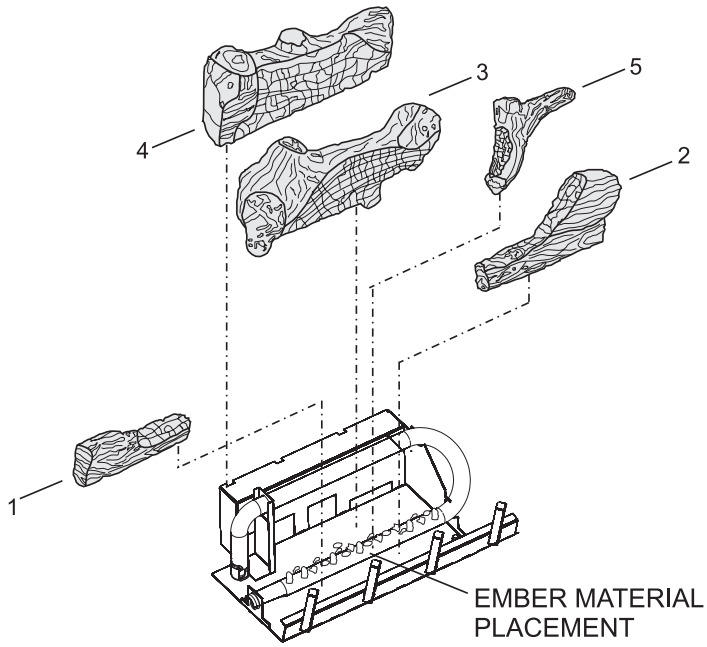

Figure 56

LOG PLACEMENT (7 LOG SET) - DVD(42,48)FP

This fireplace is supplied with a set of seven ceramic fiber logs. Do not handle these logs with your bare hands. Always wear gloves to prevent skin irritation from ceramic fibers. After handling logs, wash your hands gently with soap and water to remove any traces of fiber.

The positioning of logs is critical to safe and clean operation of this fireplace. Sooting and other problems may result if the logs are not properly and firmly positioned in the fireplace. Please refer to **Figure 57 and Figure 58** and corresponding WARNING when completing following log placement steps.

1. Remove top louver, grasp louver, lift and pull forward.
2. Lower bottom louver, lift and hinge forward.
3. Release two glass frame spring clamps at bottom of firebox
4. Remove glass frame spring assembly.
5. Place front logs (#1, #2, and #3) between grates and main burner. Align notches on front logs with locator tabs in base.
6. Place middle log (#4) between front and rear loop of burner. Note: do not place on top of pilot assembly.
7. Place rear log (#5) on rear log shelf. Bottom flange is to be placed between the log shelf and burner tube.
8. Place bottom "Y" branch (#6) onto flat areas of middle log (#4) and bottom end of "Y" branch to the back side of the grate tang (4th one from the left).
9. Place top branch (#7) onto flat area of rear log (#5) and over the front of "Y" branch.
10. Place decorative rock in front of grates and sides of main burner.

ATTENTION: Do not place decorative rock on logs or on burner. The decorative rock should only be placed on the fireplace floor.

11. After all logs are properly positioned, place small "dime" size pieces of Rockwool lightly across the front burner tube ports. Place the ember material (Rockwool pieces) side by side. Do not stack more than one layer of embers across the burner ports. **See Figure 58.**
12. Replace glass frame onto firebox.
13. Secure the two glass frame spring clamps at bottom of firebox.
14. Align the tabs on top louver brackets with slots in front posts to secure top louver.
15. Close bottom louver. Lift slightly to engage the end tabs into the slots in fireplace sides to close louver panel.

Figure 57

Warning: Failure to position the parts in accordance with this diagram or failure to use only parts specifically approved with this appliance may result in property damage or personal injury.

Attention: Do not use **Figure 57 or Figure 58** to order logs. Refer to parts lists and parts views on pages 60 to 63 to order logs and/or ember material for your appropriate fireplace model.

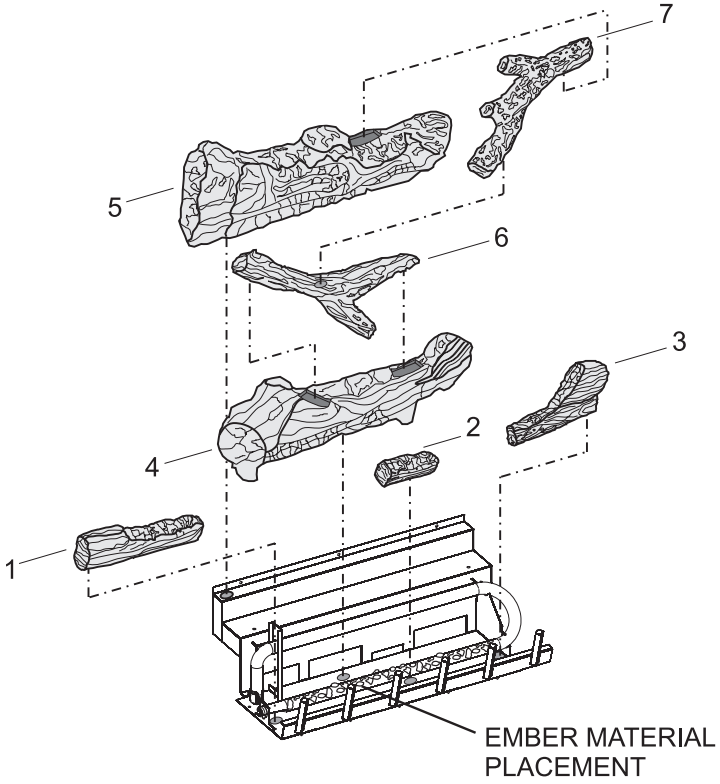

Figure 58

MILLIVOLT OPERATING INSTRUCTIONS (FP3 SERIES)

MILLIVOLT SYSTEM - "PILOT ON DEMAND"
In the "Pilot On Demand" mode, the pilot remains ON continuously even when the burner is turned OFF. The pilot will shut off after 7 days if there is no activity or call for heat. Applies to Models; DVD(32,36,42,48)FP33(N,P)-4

Millivolt System

When you ignite the pilot, the thermopile produces millivolts (electrical current) which energizes the magnet in the gas valve. After 30 seconds to 1 minute time period you can release the gas control knob and the pilot will stay ON. Allow your pilot flame to operate an additional one to two minutes before you turn the gas control knob from the PILOT position to the ON position. This time period allows the millivolts (electrical current) to build-up to a sufficient level allowing the gas control to operate properly.

1. Follow the SAFETY and LIGHTING INSTRUCTIONS for standing pilot controls found in this manual and on labels found in control compartment behind the door assembly.

⚠ CAUTION
During the initial purging and subsequent lightings, never allow the gas valve control knob to remain depressed in the "pilot" position without pushing the piezo ignitor button at least once every second.

2. During the operating season, leave the control valve knob in the "ON" position. This will allow the pilot flame to remain lit. Turn the burner flame on or off with the fireplace REMOTE/OFF/ON switch, wall switch or remote controls.

NOTICE: The gas control valve allows you to increase or decrease the height of the main burner flame. The control valve has a pressure

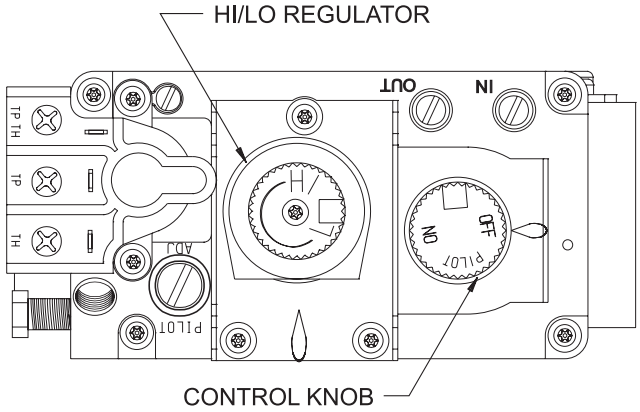

regulator with a knob as shown in **Figure 59.** Rotate the knob clockwise to "HI" to increase the flame height and counterclockwise to "LO" to decrease the flame height.

3. When the operating season is over, turn the REMOTE/OFF/ON switch to "OFF" and the control valve to "OFF". The system, including the pilot light, will be shut down.

Figure 59

The OWNER should carefully read and follow these operating instructions at all times. Lower the door assembly to view the gas controls for the fireplace.

Initial Lighting

Upon completing the gas line or turning the gas valve on after it has been in the "OFF" position, a small amount of air will be in the lines. When first lighting the fireplace, it will take a few minutes for the lines to purge themselves of this air. Once the purging is complete, the fireplace will light and operate satisfactorily.

Subsequent lightings of the appliance will not require such purging if the gas valve is not turned to "OFF."

Pilot Flame

The thermopile/thermocouple (standing pilot) tips should be covered with flame.

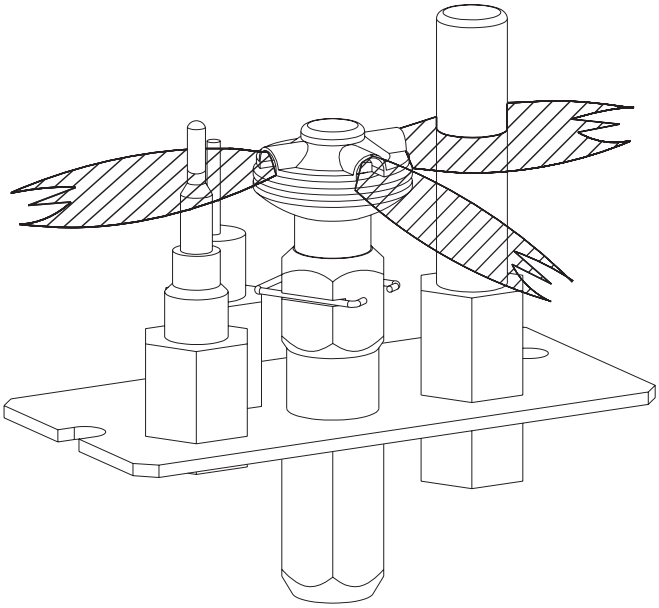

Figure 60

MILLIVOLT OPERATING INSTRUCTIONS (FP3 SERIES)

STANDING PILOT OPERATING INSTRUCTIONS
REMOTE/OFF/ON Switch
The fireplace is equipped with a REMOTE/OFF/ON switch. A wire harness is attached to the REMOTE/OFF/ON switch. The red, black and green (wires) female push-ons attach to the REMOTE/OFF/ON switch. At the opposite end of the wire harness, the black and green (wires) female push-ons attach to the gas valve. An additional green wire and the red wire, which are stripped and bare, will attach to one of the accessories that can be purchased for use with your fireplace.

NOTICE
"ON DEMAND PILOT" System Operation After seven days of inactivity of the main burner, the pilot will shut off. Applies to Models; DVD(32,36,42,48)FP33(N,P)-4

Operation Of REMOTE/OFF/ON Switch With No Accessories
To ignite main burner, turn the control knob on the gas valve from the PILOT position to the ON position. Turn the REMOTE/OFF/ON switch from the OFF position to the ON position. The additional green wire and red wire, which are stripped and bare are not used.

Wall Switch, FWS-1
Connect the green and red, stripped and bare, wires on the REMOTE/OFF/ON switch wire harness to the wall switch. Turn the REMOTE/OFF/ON switch to the REMOTE position. Pivot the rocker switch on the FWS-1 to the ON position.

Wall Thermostats (Optional)

TRW - Wireless for Millivolt models
TMV - Reed switch for Millivolt models

Battery Operated Remote Controls, FRBC, FBRTC, and TRW
Connect the green and red, stripped and bare, wires on the REMOTE/OFF/ON switch wire harness to the remote receiver that is a component in the remote kit. Turn the REMOTE/OFF/ON switch to the REMOTE position. Follow instructions included with the remote to complete installation.
NOTE: If batteries fail in the remote, and immediate heat is desired, turn the REMOTE/OFF/ON switch from the REMOTE position to the ON position.

Electric (120 Volt) Operated Remote Control, FREC
Connect the green and red, stripped and bare, wires on the REMOTE/OFF/ON switch wire harness to the wires on remote receiver that is a component in the FREC. Turn the REMOTE/OFF/ON switch to the REMOTE position. Follow instructions in the FREC to complete installation.

NOTICE: If electric (120 volt) fails in FREC, and immediate heat is desired, turn the REMOTE/OFF/ON switch from the REMOTE position to the ON position.

Installation Of Remote Receiver
Place remote receiver on the floor of fireplace behind the louver as far forward as possible.

Attention: The Velcro loop and hook are not necessary in this installation but can be used to secure remote receiver.

Refer to remote control installation and operating instructions for more details on remote control.

Millivolt Control
The valve regulator controls the burner pressure which should be checked at the pressure test point. Turn captured screw counter clockwise 2 or 3 turns and then place tubing to pressure gauge over test point (Use test point "A" closest to control knob). After taking pressure reading, be sure and turn captured screw clockwise firmly to re-seal. Do not over torque. Check for gas leaks.

Millivolt thermopile is self generating. Gas valve does not require 24 volts or 110 volts.

Check System Operation
Millivolt system and all individual components may be checked with a millivolt meter 0-1000 MV range.

It is important to use wire of a gauge proper for the length of the wire:

RECOMMENDED WIRE GAUGES	
Maximum Length	**Wire Gauge**
1' to 10'	18
10' to 25'	16
25' to 35'	14

MILLIVOLT STANDING PILOT LIGHTING INSTRUCTIONS (FP3 SERIES)

FOR YOUR SAFETY READ BEFORE LIGHTING

⚠ WARNING

If you do not follow these instructions exactly, a fire or explosion may result causing property damage, personal injury, or loss of life.

A. This appliance has a pilot which must be lighted by hand. When lighting the pilot, follow these instructions exactly.

B. Before lighting smell all around the appliance area for gas. Be sure to smell next to the floor because some gas is heavier than air and will settle on the floor.

What To Do If You Smell Gas
- **Do not try to light any appliance.**
- **Do not touch any electrical switch;**
- **Do not use any phone in your building.**
- **Immediately call your gas supplier from a neighbor's phone. Follow the gas supplier's instructions.**
- **If you cannot reach your gas supplier, call the fire department.**

C. Use only your hand to push in or turn the gas control knob. Never use tools. If the knob will not push in or turn by hand, don't try to repair it; call a qualified service technician. Force or attempted repair may result in a fire or explosion.

D. Do not use this appliance if any part has been under water. Immediately call a qualified service technician to inspect the appliance and to replace any part of the control system and any gas control which has been under water.

LIGHTING INSTRUCTIONS

1. Stop! Read the safety information above.
2. Set REMOTE/OFF/ON switch to OFF.
3. Turn off all electric power to the appliance (if applicable).
4. Lower bottom louver assembly.
5. Push in gas control knob slightly and turn clockwise to "OFF."

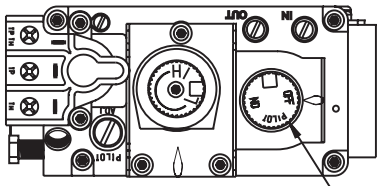

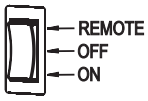

GAS CONTROL KNOB SHOWN IN "OFF" POSITION.

NOTICE: Knob cannot be turned from "PILOT" to "OFF" unless knob is pushed in slightly. Do not force.

6. Wait ten minutes to clear out any gas. Then smell for gas, including near the floor. If you then smell gas, STOP! Follow "B" in the safety information above. If you do not smell gas, go to the next step.
7. Find pilot - Follow metal tube from gas control. The pilot is behind the burner on the right side.
8. Turn gas control knob counterclockwise to "PILOT."

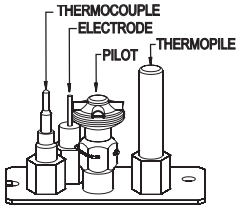

9. Push in control knob all the way and hold in. Repeatedly push the piezo ignitor button until the pilot is lit. Continue to hold the control knob in the for about one minute after the pilot is lit. Release knob, and it will pop back up. Pilot should remain lit. If it goes out, repeat steps 5 through 9.
   - If the control knob does not pop up when released, STOP and IMMEDIATELY call a qualified service technician or gas supplier.
   - If the pilot will not stay lit after several tries, turn the gas control knob to "OFF" and call your service technician or gas supplier.
10. Turn gas control knob counterclockwise to "ON."
11. Close bottom louver assembly.
12. Turn on all electric power to the appliance (if applicable).
13. Set REMOTE/OFF/ON switch to desired setting.

TO TURN OFF GAS TO FIREPLACE

1. Set REMOTE/OFF/ON switch to OFF.
2. Turn off all electric power to the appliance if service is to be performed (if applicable).
3. Lower bottom louver assembly.
4. Push in gas control knob slightly and turn clockwise to "OFF." Do not force.
5. Close bottom louver assembly.

MILLIVOLT STANDING PILOT WIRING DIAGRAM (FP3 SERIES)

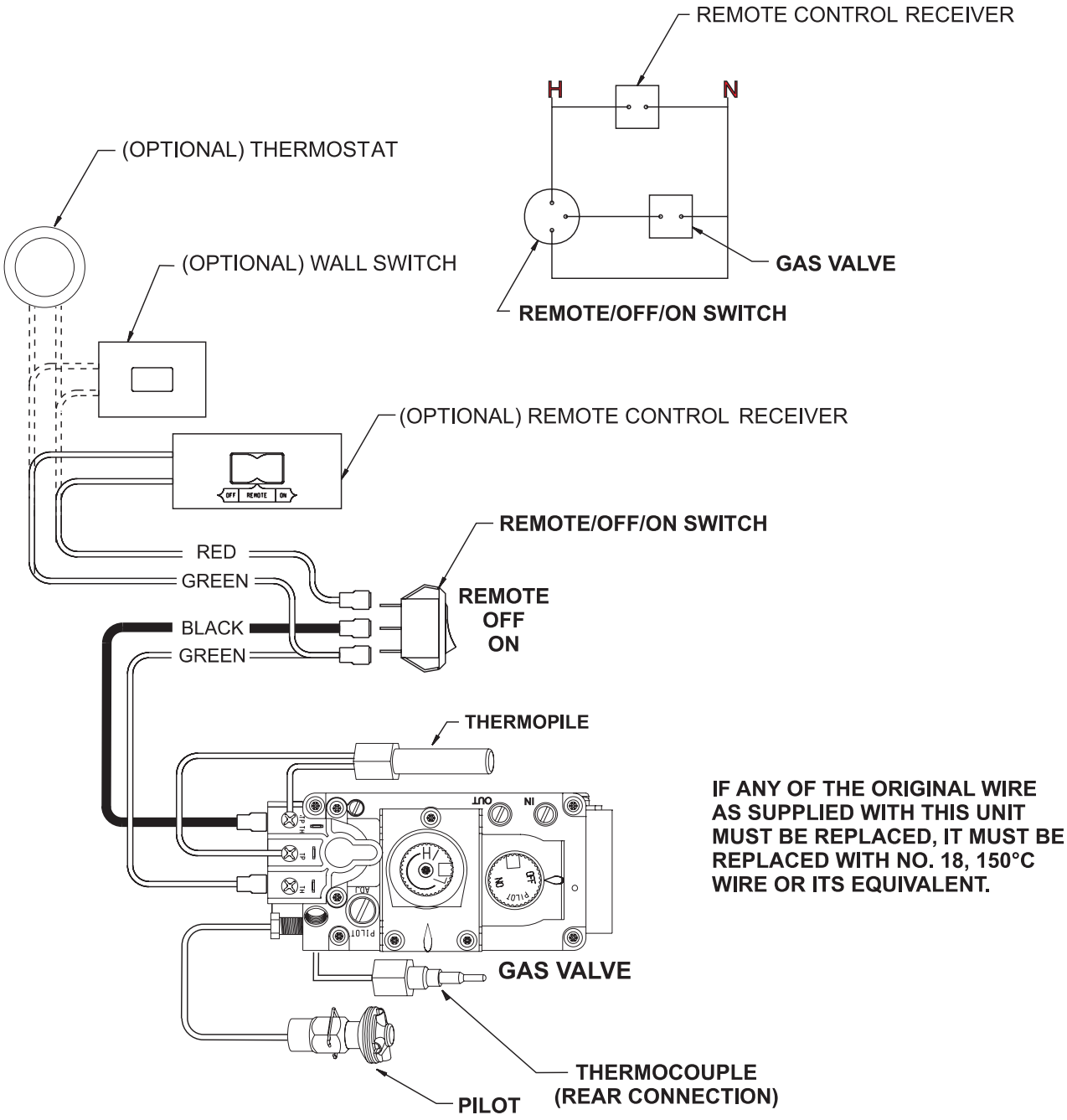

Figure 61

MILLIVOLT STANDING PILOT TROUBLESHOOTING (FP3 SERIES)

With proper installation and maintenance, your new Direct Vent Gas Fireplace will provide years of trouble-free service. If you do experience a problem, refer to the Trouble Shooting Guide below. This guide will assist a qualified service person in the diagnosis of problems and the corrective action to be taken.

1. **Spark ignitor will not light pilot after repeated triggering of piezo ignitor button.**
   a. Defective ignitor (no spark electrode)
   —Check for spark at electrode and pilot; if no spark and electrode wire is properly connected, replace ignitor.
   b. No gas or low gas pressure.
   —Check remote shut off valves from fireplace. Usually there is a valve near the main. There can be more than one valve between the fireplace and main.
   —Low pressure can be caused by a variety of situations such as a bent line, too narrow diameter of pipe, or low line pressure. Consult with plumber or gas supplier.
   c. No Propane in tank.
   —Check Propane tank. Refill tank.
2. **Pilot will not stay lit after carefully following lighting instructions.**
   a. Defective thermocouple.
   —Check that pilot flame impinges on thermocouple. Clean and/or adjust pilot for maximum flame impingement.
   —Ensure the thermocouple connection at the gas valve is fully inserted and tight (hand tight plus 1/4 turn). Faulty thermocouple if reading is below specified minimum of 15 millivolts.
   —Disconnect the thermocouple from the valve, place one millivolt meter lead wire on the end of the thermocouple and the other millivolt meter lead wire on the thermocouple copper wire. Start the pilot and hold the valve knob in. If the millivolt reading is less than 15 millivolt, replace the thermocouple.
   b. Defective valve.
   —If thermocouple is producing more than 15 millivolts, replace faulty valve.
3. **Pilot burning, no gas to burner, valve knob "ON", REMOTE/OFF/ON switch "ON."**
   a. REMOTE/OFF/ON switch, wall switch, remote control or wires defective.
   —Check REMOTE/OFF/ON switch and wires for proper connections. Place jumper wires across terminal at switch. If burner comes on, replace defective switch. If OK, place jumper wires across switch wires at gas valve-if burner comes on, wires are faulty or connections are bad.
   b. Thermopile may not be generating sufficient millivolts.
   —If the pilot flame is not close enough physically to the thermopile, adjust the pilot flame.
   —Be sure the wire connections from the thermopile at the gas valve terminals are tight and the thermopile is fully inserted into the pilot bracket.
   —Check the thermopile with a millivolt meter. Take the reading at TH-TP & TP terminals of the gas valve. The meter should read 350 millivolts minimum, while holding the valve knob depressed in the PILOT position, with the pilot lit, and the REMOTE/OFF/ON switch in the OFF position. Replace the faulty thermopile if the reading is below the specified minimum.
   —With the pilot in the ON position, disconnect the thermopile leads from the valve. Take a reading at the thermopile leads. The reading should be 350 millivolts minimum. Replace the thermopile if the reading is below the minimum.
   c. Defective valve.
   —Turn valve knob to ON. Place REMOTE/OFF/ON switch to ON. Check with millivolt meter at thermopile terminals. Millivolt meter should read greater than 200 millivolts. If the reading is okay and the main burner does not ignite, replace the gas valve.
   d. Plugged main burner orifice.
   —Check main burner orifice for blockage and remove.
4. **Frequent pilot outage problem.**
   a. Pilot flame may be too high or too low, or blowing (high), causing pilot safety to drop out.
   —Clean and adjust flame for maximum flame impingement on the thermocouple. Follow lighting instructions carefully.
5. **The pilot and main burner extinguish while in operation.**
   a. No Propane in tank.
   Check Propane tank. Refill fuel tank.
   b. Inner vent pipe leaking exhaust gases back into system
   —Check for leaks.
   c. Glass too loose, gasket leaks in corners after usage.
   —Be certain glass assembly is installed correctly.
   d. Horizontal vent improperly pitched.
   —The horizontal vent cap should slope down only enough to prevent any water from entering the unit. The maximum downwards slope is 1/4 inch.
   e. Bad thermopile or thermocouple.
   —Replace if necessary.
   f. Improper vent cap installation.
   —Check for proper installation and freedom from debris or blockage.
6. **Glass soots.**
   a. Flame impingement on logs.
   —Check and adjust log position. Contact Empire Comfort Systems, Inc.
   b. Debris around throat of main burner.
   —Inspect the opening at the base of the main burner. It is imperative that NO material be placed in this opening.
7. **Flame burns blue and lifts off main burner.**
   a. Insufficient oxygen being supplied.
   —Check to make sure vent cap is installed properly and free of debris. Make sure that vent system joints are tight and have no leaks.
   —Check to make sure that no material has been placed at the main burner base.

5.25 VDC ELECTRONIC CONTROL VALVE

The electronic control valve system includes the ability to switch the pilot from a standing pilot mode to an intermittent pilot mode.

- **IPI Mode** - In the Intermittent Pilot mode, when the fireplace is turned ON, it will cause spark to the pilot, light the pilot, then allow the burner to light. When the fireplace is turned to OFF, both the burner and pilot will be OFF.
- **CPI Mode** – In the "Pilot On Demand" mode, the pilot remains ON continuously even when the burner is turned OFF. The pilot will shut off after 7 days if there is no activity or call for heat.

NOTICE: A small toggle switch is located on the front of the module tray that is used to switch from IPI (left) to the CPI (right). **See Figure 62.**

When the unit is turned to ON, the electrical current will energize a spark to the pilot igniter. Once the pilot sensor heats up (after a few seconds), the valve will be energized, allowing gas to flow to the burner.

1. Follow the SAFETY and LIGHTING INSTRUCTIONS for Intermittent Pilot controls found in this manual, and on labels found in the control compartment located in the lower cavity of the appliance.
2. During the operating season (or in power outage periods), it is recommended that the pilot remain in the CPI (standing pilot mode) to reduce cold start issues, and/or conserve battery backup power during a power outage.
3. The gas valve has inlet and outlet pressure taps as shown in **Figure 62.** Refer to page 12 for gas pressure requirements.

NOTICE: The gas control has a manual HI/LO flame adjustment knob (regulator) that allows you to increase or decrease the height of the burner flame. **See Figure 62.** Rotate the HI/LO knob counterclockwise to "HI" to increase the flame height, and clockwise to "LO" to decrease the flame height.

OPTIONAL REMOTE CONTROLS

Optional remote controls are available for use with this appliance. It is recommended that the remote receiver be placed either in a wall outlet box with extended wiring, on the fireplace hearth, behind the left side surround panel, or in the control compartment area as far forward in the insert as possible.

The placement options for the remote receiver are given to allow flexibility, however battery life will be extended when the receiver is placed in cooler areas.

To connect the remote receiver to the appliance, first disconnect the ON/OFF switch wires from the white and green wire connectors and connect the wires from the remote receiver to the green and white wire connectors. **See Figure 62.**

Follow the instructions included with the remote control for programming and other operational information.

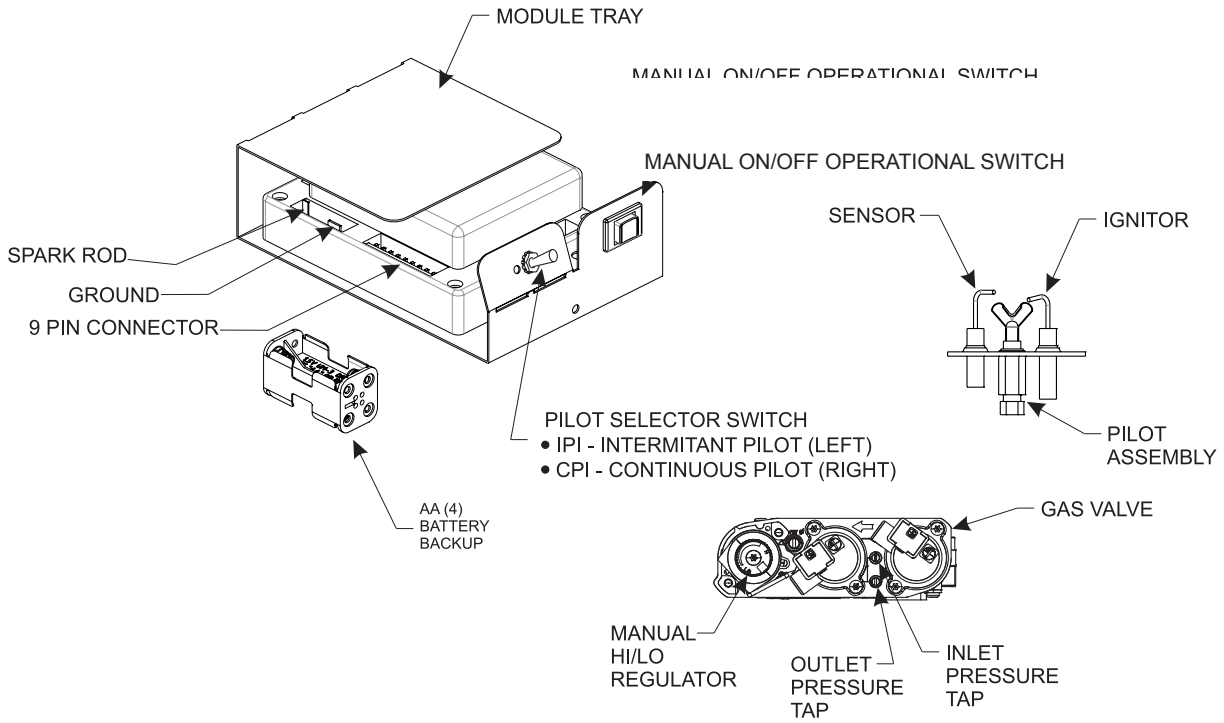

Figure 62

IPI ELECTRONIC SYSTEM WIRING DIAGRAM (FP7 SERIES)

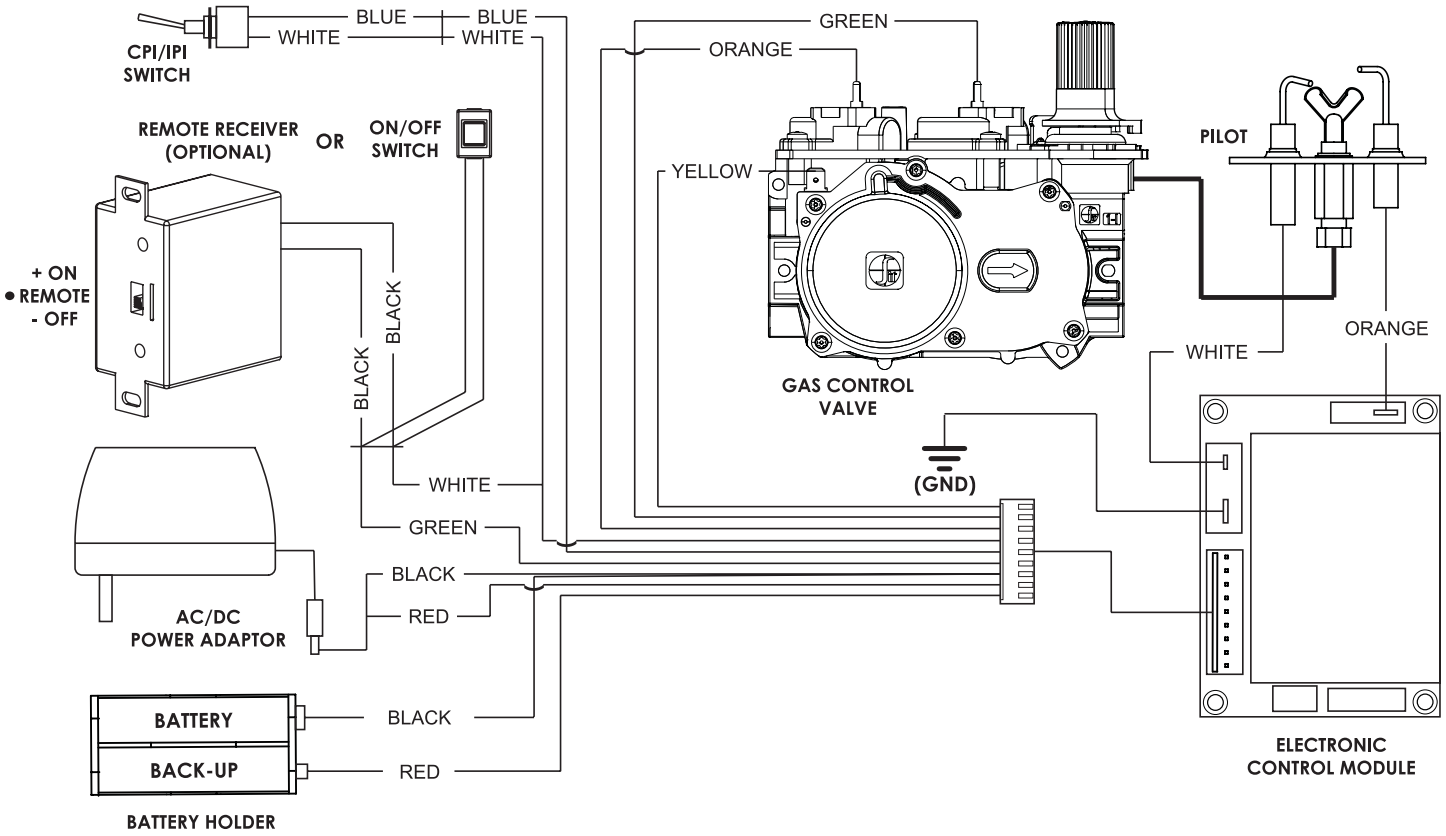

If any of the original wire supplied with this unit must be replaced, it must be replaced with equivalent gauge and temperature rated wire.

This appliance is only for use with the type of gas indicated on the rating plate in this appliance and may be installed in an aftermarket, permanently located, manufactured (mobile) home where not prohibited by local codes. This appliance is not convertible for use with other gases, unless a certified kit is used.

CAUTION: Do not operate the appliance with glass panel removed, cracked or broken. Replacement of the panel(s) should be done by a licensed or qualified service person.

WARNING: Improper installation, adjustment, alteration, service or maintenance can cause property damage, personal injury or loss of life. Installation and service must be performed by a qualified installer, service agency or the gas supplier.

INTERMITTENT PILOT LIGHTING INSTRUCTIONS (FP7 SERIES)

FOR YOUR SAFETY READ BEFORE LIGHTING

⚠ WARNING

If you do not follow these instructions exactly, a fire or explosion may result causing property damage, personal injury, or loss of life.

A. This appliance has a pilot which can be lighted with the manual on/off switch, a remote control, or by switching the receiver switch to the "ON" position. When lighting the pilot, follow these instructions exactly.

B. BEFORE LIGHTING smell all around the appliance area for gas. Be sure to smell next to the floor because some gas is heavier than air and will settle on the floor.
WHAT TO DO IF YOU SMELL GAS
Do not try to light any appliance. Do not touch any electrical switch. Do not use any phone in your building. Immediately call your gas supplier from a neighbor's phone. Follow the gas supplier's instructions. If you can not reach your gas supplier, call the fire department.

C. Use only the remote control or manual remote receiver switch to operate the gas valve. Never use tools. If valve does not operate, don't try to repair it, call a qualified service technician. Force or attempted repair may result in a fire or explosion.

D. Do not use this appliance if any part has been under water. Immediately call a qualified service technician to inspect the appliance and to replace any part of the control system and any gas control which has been under water.

LIGHTING INSTRUCTIONS

1. STOP! Read the safety information above.
2. Turn OFF electric power to the appliance.
3. Remove front surround panel assembly or bottom louver if included.
4. Turn gas shut-off counterclockwise ↶ to "On" position.
5. Wait ten minutes to clear out any gas. Then smell for gas, including near the floor. If you smell gas, STOP! Follow "B" in the safety information above on this page. If you do not smell gas, go to the next step.
6. Turn ON electric power to the appliance.
7. Find pilot - Follow metal tube from gas control. The pilot is behind the burner on the right side.
8. Turn main flame to on. If the pilot does not light within 60 seconds, stop and go to Step 5.
9. Refer to remote control instructions for detailed information, control features, and operation. **NOTE:** There is a CPI/IPI switch that allows for a continuous standing pilot mode or an intermittent pilot mode. See appliance manual for location of this switch. If the pilot or burner does not stay lit (in the standing pilot mode), stop and immediately call a qualified service technician or gas supplier.
10. If the burner or pilot does not operate properly after several tries, turn the gas shut-off clockwise ↷ to "OFF" and call your service technician or gas supplier.
11. Replace the front surround assembly or close bottom louver assembly.
12. Operation of the gas valve is controlled by a manual on/off switch or a hand held remote control. Refer to remote instructions for detailed operation information.

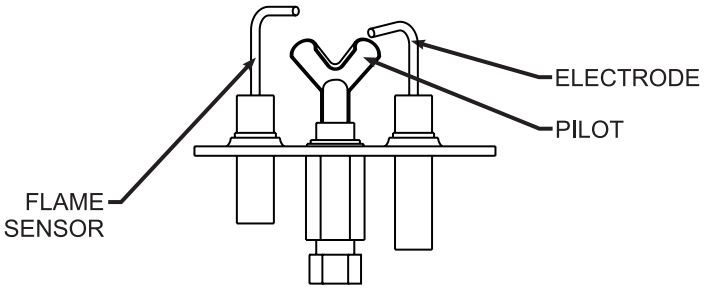

GAS SHUT-OFF VALVE

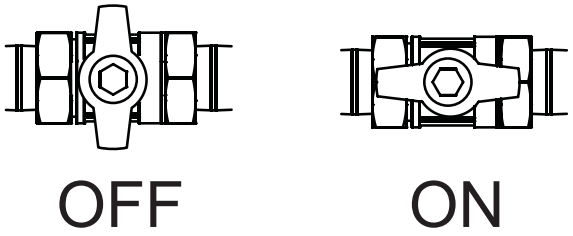

TO TURN OFF GAS TO FIREPLACE

1. Turn off all electric power to the appliance if service is to be performed (if applicable).
2. Gain access to control compartment. Remove surround panel assembly if necessary.
3. Locate On/Off gas shut-off and turn clockwise to ↷ "OFF". Do not force.
4. Close bottom louver assembly, if included.

INTERMITTENT PILOT CONTROL SYSTEM TROUBLESHOOTING (FP7 SERIES)

Brief Description of the Components

The gas valve is fitted with a manual HI/LO knob to allow for manual modulation of the gas outlet pressure to the appliance burner. The controls are designed to be used with either Propane Gas or Natural Gas and can be converted by use of an OEM supplied conversion kit.

The Digital Fireplace Control (DFC) is an automatic gas ignition system based on a single micro-controller core. This control manages all functions related to ignition, flame sensing and supervision for atmospheric applications.

The DFC can be set to provide continuous or intermittent ignition control sequences and flame monitoring with safety shutdown in case of failure.

The DFC is set up as a stand alone (AC powered system with battery back up. See Lighting Instructions on page 50 and Wiring Diagram on page 49.

Troubleshooting

Before proceeding with the procedures in the following troubleshooting table, verify that the power supply (AC/DC adapter) is present and that the batteries inside the receiver and/or optional battery pack are fresh and installed with correct polarity.

Make sure all the connections between the wire harnesses and system components are proper and positive.

Verify that the static inlet pressure meets the manufacturer's recommended inlet pressure. If necessary adjust the line pressure regulator.

If the recommended actions for the following troubleshooting chart do not help to address the problem consider replacing wiring harnesses.

⚠ WARNING

Any actions performed on the gas valve must be in accordance with this instruction manual. Likewise, any actions performed on the DFC or other system components must be done in accordance with the individual component instructions. Replacement of components must be performed in accordance with this instructions manual.

INTERMITTENT PILOT CONTROL SYSTEM TROUBLESHOOTING (FP7 SERIES)

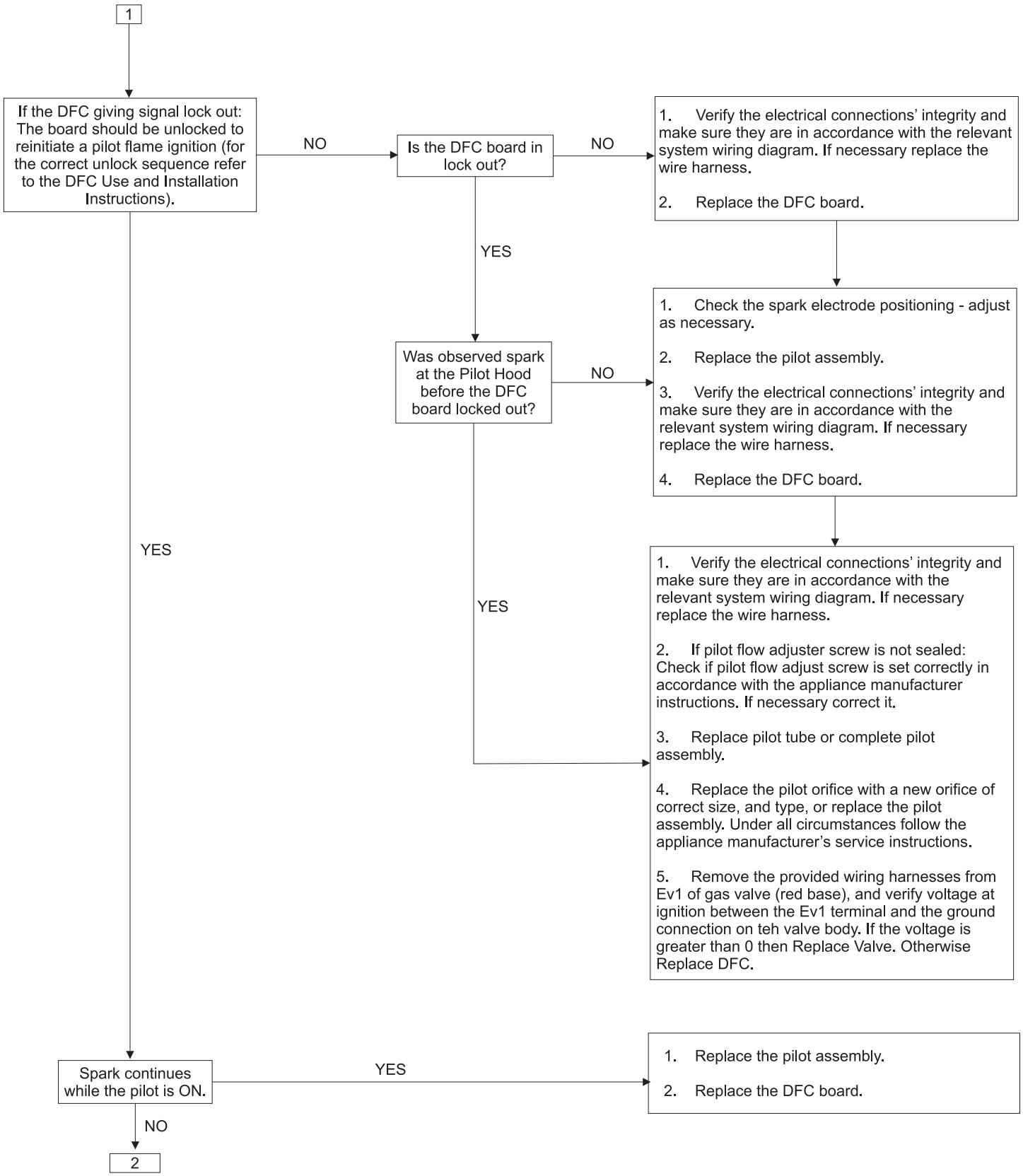

INTERMITTENT PILOT CONTROL SYSTEM TROUBLESHOOTING (FP7 SERIES)

2

Main burner lights when the pilot only should light.

YES →

1. Replace DFC board.
2. Replace the gas valve.

NO ↓

Pilot holds the flame?.

NO →

1. Verify the pilot flame fully engulfs the tip of the sense electrode. If not replace the pilot assembly.
2. Replace the pilot assembly.
3. Carefully clean the electrical connections of the sense cable, and the DFC board sense cable connection.
4. Replace the sense cable, or the cable-sense electrode assembly, or the pilot assembly.
5. Verify the pilot is properly grounded.
6. Replace the pilot orifice with a new orifice of correct size, and type, or replace the pilot assembly.
7. If pilot flow adjuster screw is not sealed, correct it.

YES ↓

Main burner ignites?

NO →

1. Verify the electrical connections' integrity and make sure they are in accordance with the relevant system wiring diagram. If necessary replace the wire harness.
2. Check if the optional remote transmitter is in "thermostat" or "on" mode and verifyt there is a call for heat (f using a thermostat remote). Adjust the setting for heat.
3. Verify that the pilot hood is properly fitted and a pilot flame is directed to properly ignite the main appliance burner.
4. Replace the main burner orifice with a new orifice of correct size and type, or replace the pilot assembly. Under all circumstances follow the service instructions.
5. Remove the provided wiring harnesses from EV2 of gas valve (red base), and verify voltage at ignition between the EV1 terminal and the ground connection on the valve body.
   5.1 If the voltage is greater than 0 then Replace Valve.
   5.2 Or Replace DFC.
6. Check the pressure at the outlet pressure test point out according to the manufacturer's instruction. If not in accordance, replace the gas valve.

YES ↓

Main burner remains ON

NO →

1. Verify the electrical connections' integrity and make sure they are in accordance with the relevant system wiring diagram. If necessary replace the wire harness.
2. Check the pressure at the outlet pressure test point out according the manufacturer's instruction. If not in accordance replace the gas valve.
3. With the system in the OFF position, connect the voltmeter between the EV2 terminal (green base) on the valve, and the ground on the valve body.
   Turn the system ON, let pilot light, and observe the following voltage sequence: once the pilot flame is proved, the voltage on EV2 should spike to approx. 5 VdC for approx. 2 sec and then drop to approx. 0.6 VdC continuously.
   3.1 If the sequence is respected, replace the gas valve.
   3.2 If the sequence is not respected, replace the DFC board.

↓

Main burner modulates properly?

→

1. Replace the main burner orifice with a new orifice of correct size (partial blockage possible). Verify that the main burner flame modulates manually. If it does not modulate replace the gas valve.
2. Verify that the gas valve outlet pressure limits are in accordance with the manufacturer specifications. If not replace the gas valve.

FOR MANUAL HI/LO VERSION

3. Verify the flame changes while rotating the HI/LO knob on the front of the gas valve. If there is no change replace the gas valve.

MAINTENANCE AND SERVICE

PLEASE NOTE
It is normal for appliances fabricated of steel to give off some expansion and/or contraction noise during the start up or cool down cycle. Similar noises are found with your furnace heat exchanger or car engine.

It is not unusual for your gas fireplace to give off some odor the first time it is burned. This is due to the curing of the paint and any undetected oil from the manufacturing process.

Please ensure that your room is well ventilated - open all windows.

It is recommended that you burn your fireplace for at least six (6) hours the first time you use it. If optional fan kit has been installed, place fan in the "OFF" position during this time.

IMPORTANT: Turn off gas before servicing appliance. It is recommended that a qualified service person perform these check-ups at the beginning of each heating season.

- **Clean Burner and Control Compartment**
  Keep the control compartment, logs, and burner areas surrounding the logs clean by vacuuming or brushing at least twice a year.

Cleaning Procedure

1. Turn off pilot light at gas valve.
2. Remove glass front. (See Glass Removal)
3. Vacuum burner compartment.
4. Reinstall glass front.
5. Ignite pilot. (See Lighting Instructions)
6. Operate the pilot burner. If it appears abnormal call a service person.

- **Check Vent System**
  The appliance and venting system should be inspected before initial use and at least annually by a qualified service person. Inspect the external vent cap on a regular basis to make sure that no debris is interfering with the air flow.

Glass Cleaning

It will be necessary to clean the glass periodically. During start-up condensation, which is normal, forms on the inside of the glass and causes lint, dust and other airborne particles to cling to the glass surface. Also initial paint curing may deposit a slight film on the glass. It is therefore recommended that the glass be cleaned two or three times with a non-abrasive household cleaner and warm water (we recommend gas fireplace glass cleaner). After that the glass should be cleaned two or three times during each heating season depending on the circumstances present.

General Glass Information

WARNING: Do not operate appliance with the glass front removed, cracked or broken. Replacement of the glass should be done by a licensed or qualified service person.

Only glass approved for use by the manufacturer in fireplace may be used for replacement. The glass replacement should be done by a licensed or qualified service person.

WARNING:

1. The use of substitute glass will void all product warranties.
2. Care must be taken to avoid breakage of the glass.
3. Under no circumstances should this appliance be operated without the glass front or with a broken glass front. Replacement of the glass (with gasket) as supplied by the manufacturer should be done by a qualified service person.
4. Do not abuse the glass by striking or hitting the glass.

WARNING: Do not use abrasive cleaners on glass. Do not attempt to clean glass when glass is hot.

Glass Door Removal

1. Remove the top louver by grasping the louver, then lift upward and pull forward.
2. Remove the bottom louver by lifting up and pulling forward.
3. Locate the bottom two glass frame spring clamps. Pull forward and down to release them from the Glass Door frame.
4. Remove the Glass Door by pulling the bottom of the door outward several inches, then lift upwards to disengage it from the firebox upper flange.

Glass Door Installation

1. When installing the Glass Door assembly, make sure that the door top flange is hooked over the firebox top flange as illustrated in the "Correct" view in **Figure 63.**
   Important: Do not allow the gasket across the top of the door to roll up on top of the firebox flange as shown in "Incorrect" view in Figure 63.
2. To install correctly, the door should be held at an angle outward from the firebox as shown in the illustration, then carefully engage the upper flange of the door frame with the top flange of the firebox. Center the door left to right, then allow the bottom of the door to swing inward to seal against the firebox front.
3. Once the glass door is placed flat to the firebox front edges, engage the two spring latches to the bottom flange on the glass door frame to secure the door assembly.
4. Replace the top and bottom louvers.

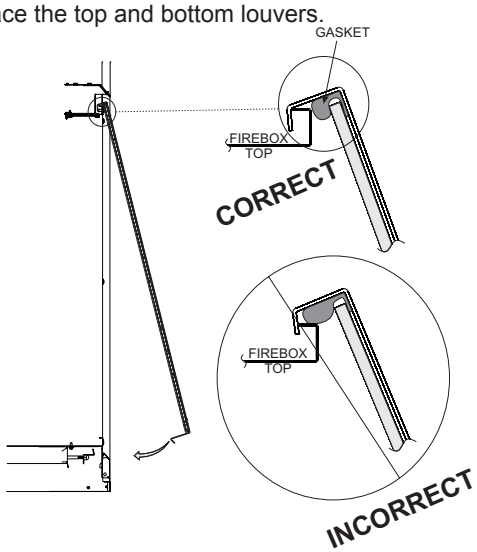

Glass Door Installation (Side View)
Figure 63

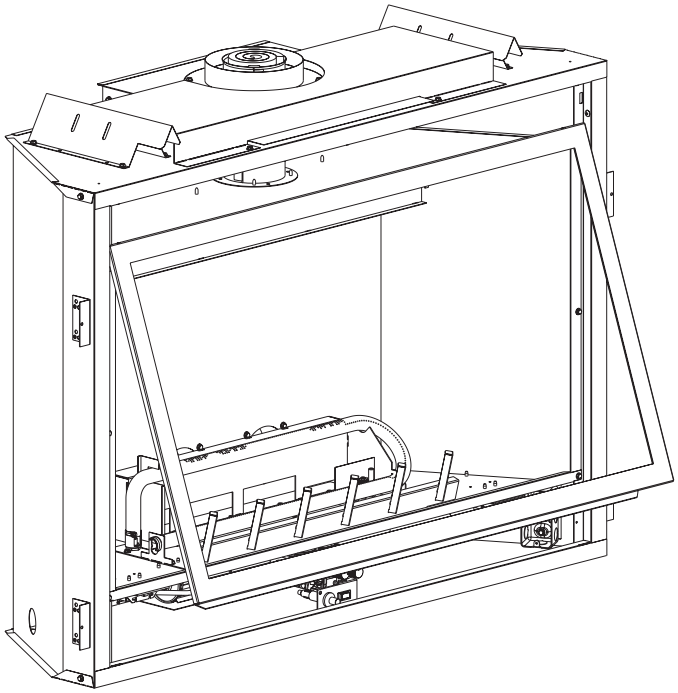

Glass Door Installation
Figure 64

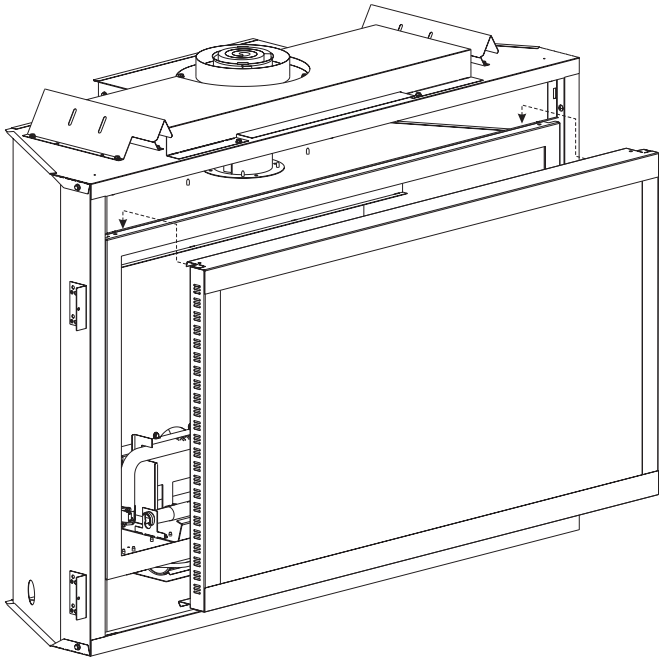

Barrier Screen Installation
Figure 65

IMPORTANT SAFETY INFORMATION

FOR THE HOMEOWNER

Annual Inspection

- Have the fireplace inspected annually before use.
- More frequent inspection and cleaning may be required if the fireplace is installed in an area exposed to pet hair or dust, or to excessive lint from new carpeting or bedding materials.

During The Annual Checkup, The Technician Will:

- Inspect the pilot (flame safety system) and burner(s) for proper operation and replace any damaged parts.
- Check the glass and gasket for proper seal.
- Vacuum and clean any foreign debris in the firebox that is not supposed to be there.
- Clean Glass with a suitable fireplace glass cleaner. Abrasive cleaners must not be used. Be careful not to scratch the glass when cleaning.
- Check the barrier screen for fit and structural integrity. **See Figure 65.**
- Check all latches or other door retention components for proper operation, tension, and relief mechanisms are free from obstructions. **See Figure 63.**
- Inspect the log set (if applicable) and decorative media (if applicable) for debris or damage.
- Freshen up the glowing embers if applicable.
- Replace batteries in the remote transmitter and receiver if applicable.
- Inspect the venting and vent termination cap for damage, corrosion, sooting, or obstruction and correct if present.
- *In addition, clean and inspect the fireplace following any remodeling work in your home.*

FOR THE INSTALLER

Annual Inspection

- Have the fireplace inspected annually before use.
- More frequent inspection and cleaning may be required if the fireplace is installed in an area exposed to pet hair or dust, or to excessive lint from new carpeting or bedding materials.

During The Annual Checkup, The Technician Will:

- Inspect the pilot (flame safety system) and burner(s) for proper operation and replace any damaged parts.
- Test and measure the flame failure response time of the flame safety system. It must de-energize the safety shut-off in no more than 30 seconds.
- Vacuum and clean any foreign debris in the firebox that is not supposed to be there.
- Inspect and ensure that the lighting of the main burner occurs within 4 seconds of the gas valve opening. Visual inspection should match the information illustrated in the manual. Inspect primary air openings for blockage.
- Check the glass and gasket for proper seal.
- Clean Glass with a suitable fireplace glass cleaner. Abrasive cleaners must not be used. Be careful not to scratch the glass when cleaning.
- Check all latches or other door retention components for proper operation, tension, and relief mechanisms are free from obstructions. **See Figure 63.**
- Check the barrier screen for fit and structural integrity. **See Figure 65.**
- Inspect the log set (if applicable) and decorative media (if applicable) for debris or damage.
- Freshen up the glowing embers if applicable.
- Replace batteries in the remote transmitter and receiver if applicable.
- Inspect the venting and vent termination cap for damage, corrosion, sooting, or obstruction and correct if present.
- Check all accessible gas-carrying tubes, connections, pipes and other components for leaks.
- *In addition, clean and inspect the fireplace following any remodeling work in your home.*

DVD32FP(3,7) PARTS LIST

INDEX NO.	PART NUMBER		DESCRIPTION
	MV (FP3)	IP (FP7	
1	R7654	R7654	FLUE INSULATION
2	17425	17425	FLUE INSULATION RETAINER
3	R7566	R7566	INLET VENT ADAPTOR
4	R7573	R7573	INLET VENT GASKET
5	17155	17155	FLUE OUTLET ASSEMBLY
6	M163	M163	FLUE CONNECTOR GASKET
7	17142	17142	VENT COVER PLATE
8	R7575	R7575	VENT COVER PLATE GASKET
9	17141	17141	FLUE COVER PLATE
10	R7574	R7574	FLUE OUTLET GASKET
11	17301	17301	TOP STANDOFF (2 REQUIRED)
12	17317	17317	TOP SHIELD
13	42261	42261	NAILING FLANGE (4 REQUIRED)
14	17162	17162	JUNCTION BOX ASSEMBLY
15	R3492	R3492	RECEPTACLE, 3-PRONG
16	17169	17169	LOUVER ASSEMBLY-UPPER
17	17172	17172	GLASS DOOR FRAME ASSEMBLY
18	17170	17170	LOUVER ASSEMBLY-LOWER
19	17174	17174	BAFFLE, FLUE VENT
20	R7587	R7587	REAR LOG
21	R7586	R7586	MIDDLE LOG
22	R7585	R7585	FRONT LEFT LOG
24	R7554	R7554	FRONT RIGHT LOG
25	R7588	R7588	“Y” TWIG
26	N/A	N/A	TOP LOG-TWIG
27	N/A	N/A	FRONT “Y” LOG
28	R7580	R7580	BURNER TUBE
29	17235	17235	LOG LOCATOR BRACKET
30	17185	17185	BURNER BASE PLATE ASSEMBLY
31	R7624	R7624	AIR SHUTTER
32	P254	P254	ORIFICE (NATURAL)
32	P287	P287	ORIFICE (PROPANE)
33	R7572	R7572	JAMB NUT
34	P212	P212	ORIFICE FITTING
35	17258	31570	TUBING ASSEMBLY, INLET
36	R2423	R2423	MALE CONNECTOR
37	R7577	R11125	GAS VALVE (NATURAL)
37	R12905	—	GAS VALVE (NATURAL) 7-DAY PILOT*
37	R7578	R11126	GAS VALVE (PROPANE)
37	R12906	—	GAS VALVE (PROPANE) 7-DAY PILOT*

* See Notice On Page 39 For 7-Day Pilot Valve Or Control Module Operation.

INDEX NO.	PART NUMBER		DESCRIPTION
	MV (FP3)	IP (FP7)	
38	17161	29400	VALVE BRACKET
39	17318	17318	PILOT SHIELD
40	R7612	R10423	PILOT ASSEMBLY (NATURAL)
40	R7611	R10424	PILOT ASSEMBLY (PROPANE)
41	R7617	R9189	PILOT GASKET
42	R9760	N/A	PIEZO IGNITOR
43	R3436	N/A	REMOTE OFF/ON SWITCH
44	R10947	N/A	WIRE ASSEMBLY
45	N/A	R11122	BATTERY HOLDER
46	N/A	R2522	ON/OFF SWITCH
47	N/A	R12907	CONTROL MODULE*
48	29057	29057	SPRING LATCH ASSEMBLY
49	17357	17357	JUNCTION BOX SHIELD
50	N/A	R2566	WIRE 5 1/2” BLACK (2 REQUIRED)
51	N/A	R11123	WIRE HARNESS
52	N/A	29382	TRAY, CONTROL MODULE
53	N/A	R11128	AC ADAPTOR, 7.0 VDC
54	N/A	R11034	WIRE ASSEMBLY
55	N/A	N/A	IGNITER WIRE (SPARK PLUG WIRE)
56	N/A	N/A	CORD SET
57	N/A	N/A	GASKET, PSE IGNITER
58	N/A	N/A	SPARK IGNITER PLATE
59	N/A	31300	PILOT BRACKET
N/S	15999	15999	EMBER MATERIAL (ROCKWOOL)

N/S - NOT SHOWN

USE ONLY MANUFACTURER’S REPLACEMENT PARTS. USE OF ANY OTHER PARTS COULD CAUSE INJURY OR DEATH.

DVD32FP(3,7) PARTS VIEW

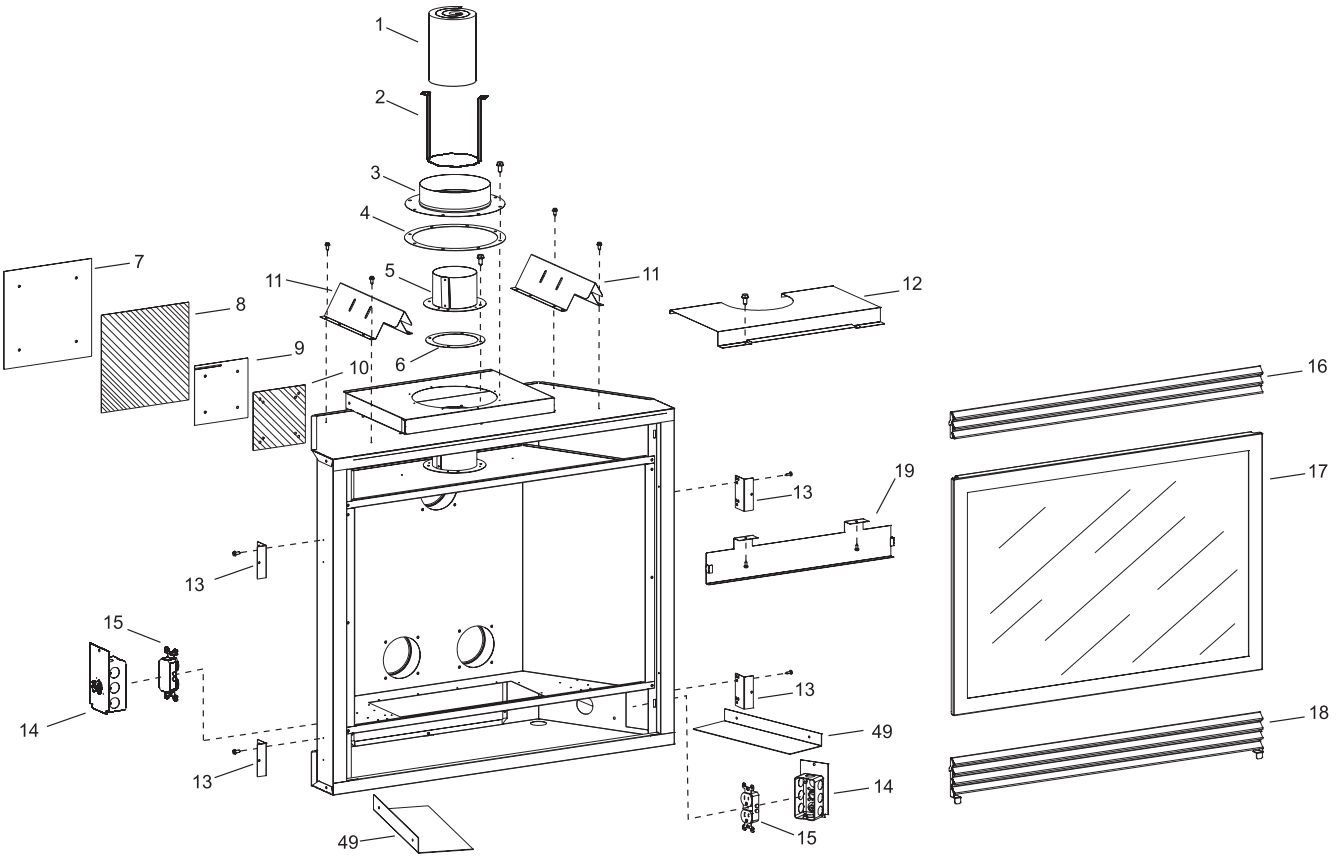

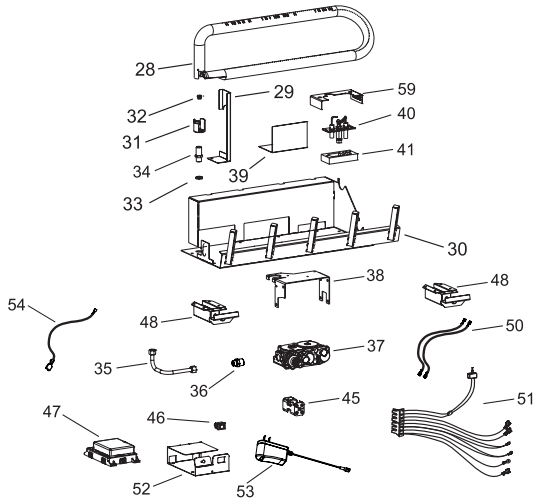

INTERMITTENT PILOT BURNER ASSEMBLY

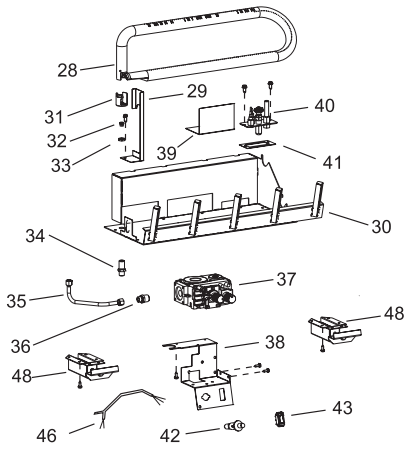

MILLIVOLT BURNER ASSEMBLY

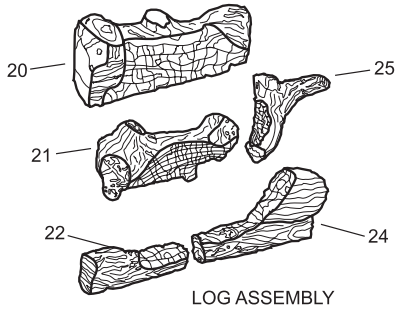

LOG ASSEMBLY

USE ONLY MANUFACTURER'S REPLACEMENT PARTS. USE OF ANY OTHER PARTS COULD CAUSE INJURY OR DEATH.

DVD36FP(3,7) PARTS LIST

INDEX NO.	PART NUMBER		DESCRIPTION
	MV (FP3)	IP (FP7)	
1	R7654	R7654	FLUE INSULATION
2	17425	17425	FLUE INSULATION RETAINER
3	R7566	R7566	INLET VENT ADAPTOR
4	R7573	R7573	INLET VENT GASKET
5	17155	17155	FLUE OUTLET ASSEMBLY
6	M163	M163	FLUE CONNECTOR GASKET
7	17142	17142	VENT COVER PLATE
8	R7575	R7575	VENT COVER PLATE GASKET
9	17141	17141	FLUE COVER PLATE
10	R7574	R7574	FLUE OUTLET GASKET
11	17149	17149	TOP STANDOFF (2 REQUIRED)
12	17317	17317	TOP SHIELD
13	42261	42261	NAILING FLANGE (4 REQUIRED)
14	17162	17162	JUNCTION BOX ASSEMBLY
15	R3492	R3492	RECEPTACLE, 3-PRONG
16	17127	17127	LOUVER ASSEMBLY-UPPER
17	17134	17134	GLASS DOOR FRAME ASSEMBLY
18	17128	17128	LOUVER ASSEMBLY-LOWER
19	17143	17143	BAFFLE, FLUE VENT
20	R7556	R7556	REAR LOG
21	R7555	R7555	MIDDLE LOG
22	R7553	R7553	FRONT LEFT LOG
24	R7554	R7554	FRONT RIGHT LOG
25	R7557	R7557	“Y” TWIG
28	R7537	R7537	BURNER TUBE
29	17235	17235	LOG LOCATOR BRACKET
30	17158	17158	BURNER BASE PLATE ASSEMBLY
31	R7624	R7624	AIR SHUTTER
32	P288	P288	ORIFICE (NATURAL)
32	P182	P182	ORIFICE (PROPANE)
33	R7572	R7572	JAMB NUT
34	P212	P212	ORIFICE FITTING
35	17258	31570	TUBING ASSEMBLY, INLET
36	R2423	R2423	MALE CONNECTOR
37	R7577	R11125	GAS VALVE (NATURAL)
37	R12905	—	GAS VALVE (NATURAL) 7-DAY PILOT*
37	R7578	R11126	GAS VALVE (PROPANE)
37	R12906	—	GAS VALVE (PROPANE) 7-DAY PILOT*

* See Notice On Page 39 For 7-Day Pilot Valve Or Control Module Operation.

INDEX NO.	PART NUMBER		DESCRIPTION
	MV (FP3)	IP (FP7)	
38	17161	29400	VALVE BRACKET
39	17318	17318	PILOT SHIELD
40	R7612	R10423	PILOT ASSEMBLY (NATURAL)
40	R7611	R10424	PILOT ASSEMBLY (PROPANE)
41	R7617	R9189	PILOT GASKET
42	R9760	N/A	PIEZO IGNITOR
43	R3436	N/A	REMOTE OFF/ON SWITCH
44	R10947	N/A	WIRE ASSEMBLY
45	N/A	R11122	BATTERY HOLDER
46	N/A	R2522	ON/OFF SWITCH
47	N/A	R12907	CONTROL MODULE*
48	29057	29057	SPRING LATCH ASSEMBLY
49	17357	17357	JUNCTION BOX SHIELD
50	N/A	R2667	WIRE 5 1/2” BLACK (2 REQUIRED)
51	N/A	R11123	WIRE HARNESS
52	N/A	29382	TRAY, CONTROL MODULE
53	N/A	R11128	AC ADAPTOR, 7.0 VDC
54	N/A	R11034	WIRE ASSEMBLY
55	N/A	N/A	IGNITER WIRE (SPARK PLUG WIRE)
56	N/A	N/A	CORD SET
57	N/A	N/A	GASKET, PSE IGNITER
58	N/A	N/A	SPARK IGNITER PLATE
59	N/A	31300	PILOT BRACKET
N/S	15999	15999	EMBER MATERIAL (ROCKWOOL)

N/S - NOT SHOWN

USE ONLY MANUFACTURER’S REPLACEMENT PARTS. USE OF ANY OTHER PARTS COULD CAUSE INJURY OR DEATH.

DVD36FP(3,7) PARTS VIEW

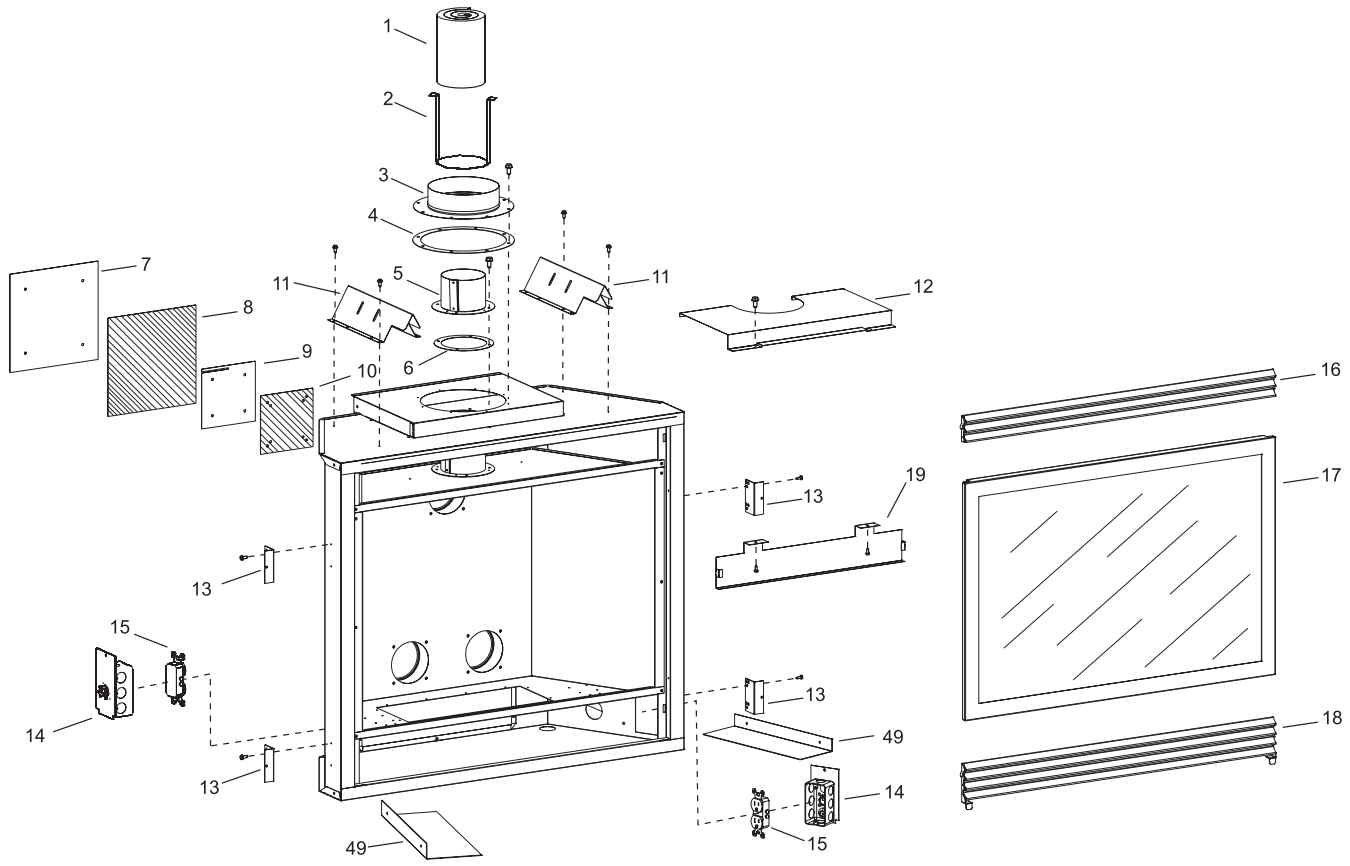

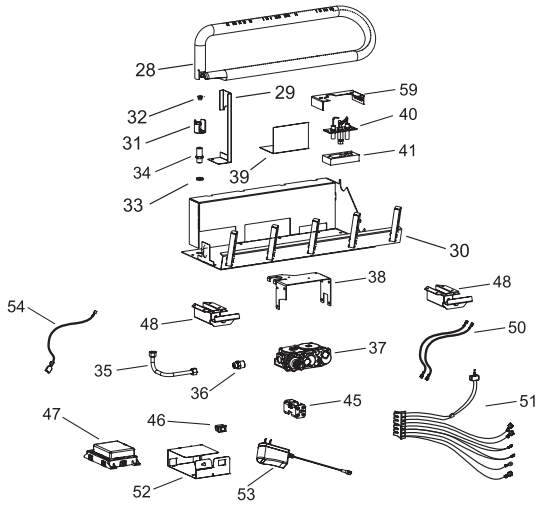

INTERMITTENT PILOT BURNER ASSEMBLY

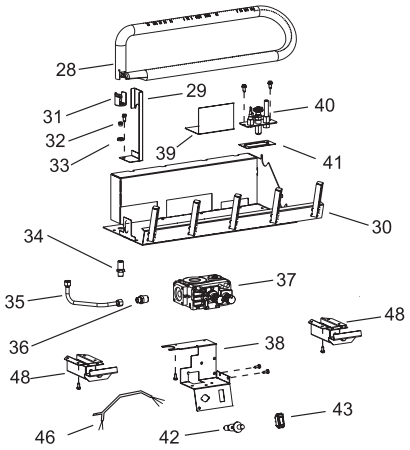

MILLIVOLT BURNER ASSEMBLY

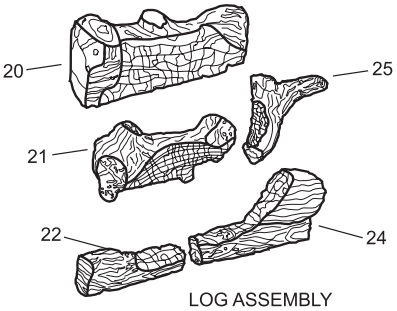

LOG ASSEMBLY

USE ONLY MANUFACTURER'S REPLACEMENT PARTS. USE OF ANY OTHER PARTS COULD CAUSE INJURY OR DEATH.

DVD42FP(3,7) PARTS LIST

INDEX NO.	PART NUMBER		DESCRIPTION
	MV (FP3)	IP (FP7)	
1	R7654	R7654	FLUE INSULATION
2	17425	17425	FLUE INSULATION RETAINER
3	R7566	R7566	INLET VENT ADAPTOR
4	R7573	R7573	INLET VENT GASKET
5	17155	17155	FLUE OUTLET ASSEMBLY
6	M163	M163	FLUE CONNECTOR GASKET
7	17142	17142	VENT COVER PLATE
8	R7575	R7575	VENT COVER PLATE GASKET
9	17141	17141	FLUE COVER PLATE
10	R7574	R7574	FLUE OUTLET GASKET
11	17149	17149	TOP STANDOFF (2 REQUIRED)
12	17319	17319	TOP SHIELD
13	42261	42261	NAILING FLANGE (4 REQUIRED)
14	17162	17162	JUNCTION BOX ASSEMBLY
15	R3492	R3492	RECEPTACLE, 3-PRONG
16	17187	17187	LOUVER ASSEMBLY-UPPER
17	17190	17190	GLASS DOOR FRAME ASSEMBLY
18	17188	17188	LOUVER ASSEMBLY-LOWER
19	17197	17197	BAFFLE, FLUE VENT
20	R7598	R7598	REAR LOG
21	R7597	R7597	MIDDLE LOG
22	R7553	R7553	FRONT LEFT LOG
23	R7601	R7601	CENTER EMBER
24	R7554	R7554	FRONT RIGHT LOG
26	R7600	R7600	TOP LOG-TWIG
27	R7599	R7599	FRONT “Y” LOG
28	R7695	R7695	BURNER TUBE
29	21260	21260	LOG LOCATOR BRACKET
30	17208	17208	BURNER BASE PLATE ASSEMBLY
31	R7624	R7624	AIR SHUTTER
32	P286	P286	ORIFICE (NATURAL)
32	P208	P208	ORIFICE (PROPANE)
33	R7572	R7572	JAMB NUT
34	P212	P212	ORIFICE FITTING
35	17337	31571	TUBING ASSEMBLY, INLET
36	R2423	R2423	MALE CONNECTOR
37	R7577	R11125	GAS VALVE (NATURAL)
37	R12905	—	GAS VALVE (NATURAL) 7-DAY PILOT*
37	R7578	R11126	GAS VALVE (PROPANE)
37	R12906	—	GAS VALVE (PROPANE) 7-DAY PILOT*

* See Notice On Page 39 For 7-Day Pilot Valve Or Control Module Operation.

INDEX NO.	PART NUMBER		DESCRIPTION
	MV (FP3)	IP (FP7)	
38	17161	29400	VALVE BRACKET
39	17318	17318	PILOT SHIELD
40	R7612	R10423	PILOT ASSEMBLY (NATURAL)
40	R7611	R10424	PILOT ASSEMBLY (PROPANE)
41	R7617	R9189	PILOT GASKET
42	R9760	N/A	PIEZO IGNITOR
43	R3436	N/A	REMOTE OFF/ON SWITCH
44	R10947	N/A	WIRE ASSEMBLY
45	N/A	R11122	BATTERY HOLDER
46	N/A	R2522	ON/OFF SWITCH
47	N/A	R12907	CONTROL MODULE*
48	29057	29057	SPRING LATCH ASSEMBLY
49	17357	17357	JUNCTION BOX SHIELD
50	N/A	R2566	WIRE 5 1/2” BLACK (2 REQUIRED)
51	N/A	R11123	WIRE HARNESS
52	N/A	29382	TRAY, CONTROL MODULE
53	N/A	R11128	AC ADAPTOR, 7.0 VDC
54	N/A	R11034	WIRE ASSEMBLY
55	N/A	N/A	IGNITER WIRE (SPARK PLUG WIRE)
56	N/A	N/A	CORD SET
57	N/A	N/A	GASKET, PSE IGNITER
58	N/A	N/A	SPARK IGNITER PLATE
59	N/A	31300	PILOT BRACKET
N/S	15999	15999	EMBER MATERIAL (ROCKWOOL)

N/S - NOT SHOWN

USE ONLY MANUFACTURER’S REPLACEMENT PARTS. USE OF ANY OTHER PARTS COULD CAUSE INJURY OR DEATH.

DVD42FP(3,7) PARTS VIEW

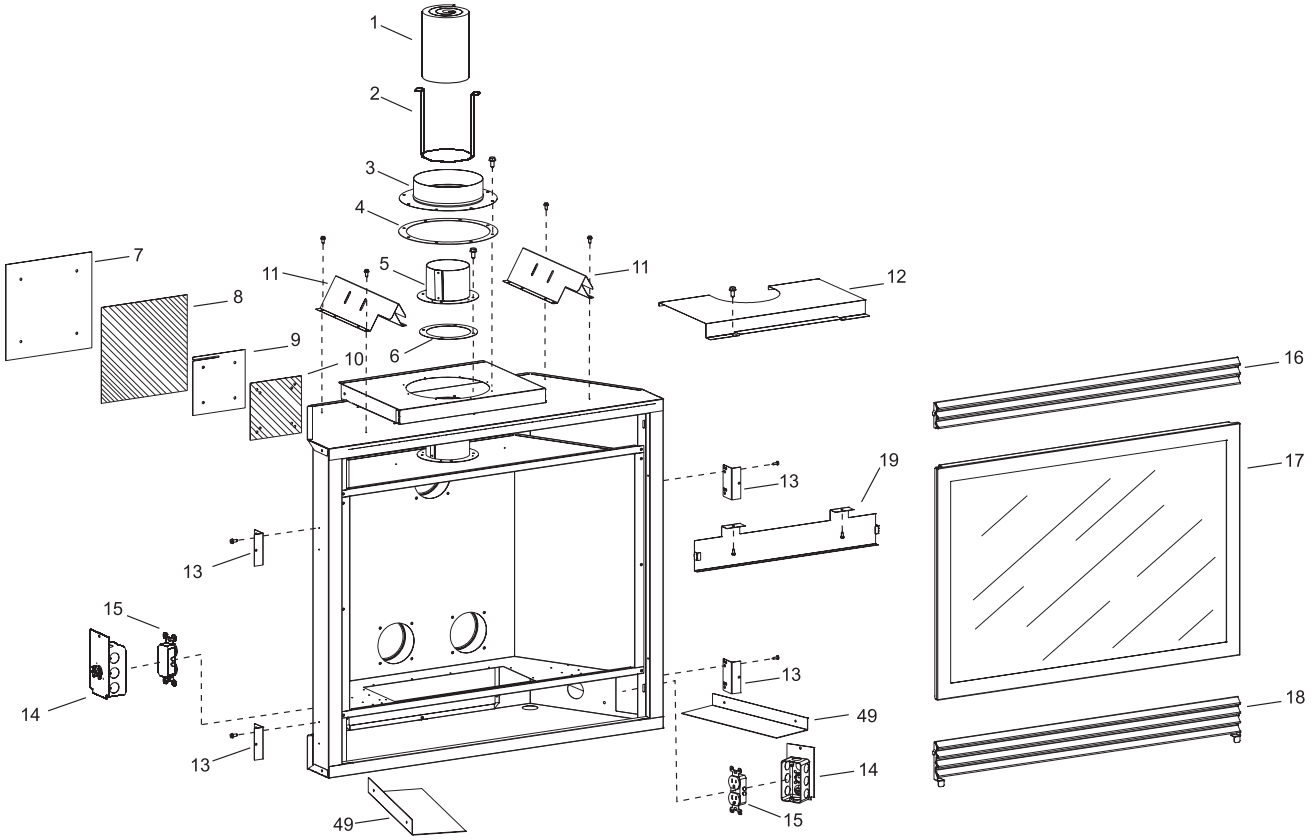

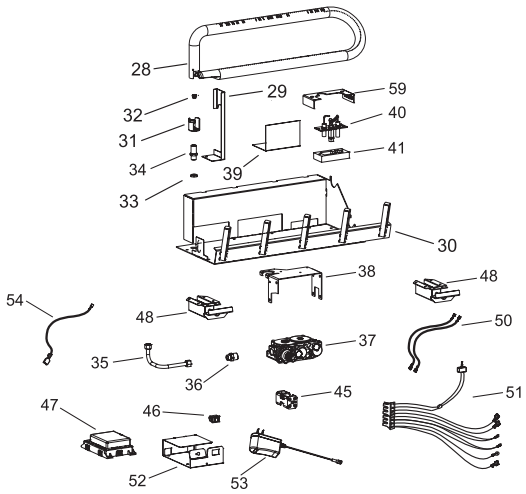

INTERMITTENT PILOT BURNER ASSEMBLY

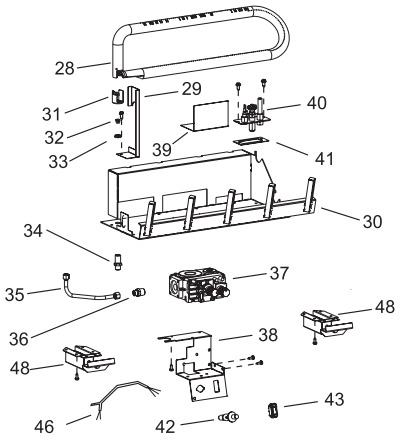

MILLIVOLT BURNER ASSEMBLY

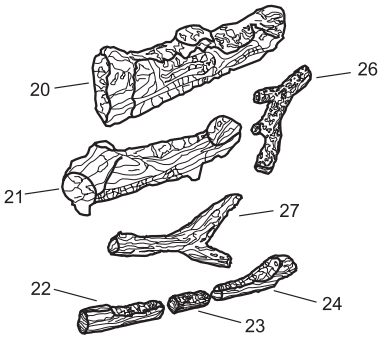

LOG ASSEMBLY

USE ONLY MANUFACTURER'S REPLACEMENT PARTS. USE OF ANY OTHER PARTS COULD CAUSE INJURY OR DEATH.

DVD48FP(3,7) PARTS LIST

INDEX NO.	PART NUMBER		DESCRIPTION
	MV (FP3)	IP (FP7)	
1	R7654	R7654	FLUE INSULATION
2	17425	17425	FLUE INSULATION RETAINER
3	R7566	R7566	INLET VENT ADAPTOR
4	R7573	R7573	INLET VENT GASKET
5	17155	17155	FLUE OUTLET ASSEMBLY
6	M163	M163	FLUE CONNECTOR GASKET
7	17142	17142	VENT COVER PLATE
8	R7575	R7575	VENT COVER PLATE GASKET
9	17141	17141	FLUE COVER PLATE
10	R7574	R7574	FLUE OUTLET GASKET
11	17149	17149	TOP STANDOFF (2 REQUIRED)
12	17320	17320	TOP SHIELD
13	42261	42261	NAILING FLANGE (4 REQUIRED)
14	17162	17162	JUNCTION BOX ASSEMBLY
15	R3492	R3492	RECEPTACLE, 3-PRONG
16	17210	17210	LOUVER ASSEMBLY-UPPER
17	17213	17213	GLASS DOOR FRAME ASSEMBLY
18	17211	17211	LOUVER ASSEMBLY-LOWER
19	17215	17215	BAFFLE, FLUE VENT
20	R7598	R7598	REAR LOG
21	R7597	R7597	MIDDLE LOG
22	R7553	R7553	FRONT LEFT LOG
23	R7601	R7601	CENTER EMBER
24	R7554	R7554	FRONT RIGHT LOG
26	R7600	R7600	TOP LOG-TWIG
27	R7599	R7599	FRONT “Y” LOG
28	R7695	R7695	BURNER TUBE
29	21260	21260	LOG LOCATOR BRACKET
30	17208	17208	BURNER BASE PLATE ASSEMBLY
31	R7624	R7624	AIR SHUTTER
32	P285	P285	ORIFICE (NATURAL)
32	P258	P258	ORIFICE (PROPANE)
33	R7572	R7572	JAMB NUT
34	P212	P212	ORIFICE FITTING
35	17337	31571	TUBING ASSEMBLY, INLET
36	R2423	R2423	MALE CONNECTOR
37	R7577	R11125	GAS VALVE (NATURAL)
37	R12905	—	GAS VALVE (NATURAL) 7-DAY PILOT*
37	R7578	R11126	GAS VALVE (PROPANE)
37	R12906	—	GAS VALVE (PROPANE) 7-DAY PILOT*

* See Notice On Page 39 For 7-Day Pilot Valve Or Control Module Operation.

INDEX NO.	PART NUMBER		DESCRIPTION
	MV (FP3)	IP (FP7)	
38	17161	29400	VALVE BRACKET
39	17318	17318	PILOT SHIELD
40	R7612	R10423	PILOT ASSEMBLY (NATURAL)
40	R7611	R10424	PILOT ASSEMBLY (PROPANE)
41	R7617	R9189	PILOT GASKET
42	R9760	N/A	PIEZO IGNITOR
43	R3436	N/A	REMOTE OFF/ON SWITCH
44	R10947	N/A	WIRE ASSEMBLY
45	N/A	R11122	BATTERY HOLDER
46	N/A	R2522	ON/OFF SWITCH
47	N/A	R12907	CONTROL MODULE*
48	29057	29057	SPRING LATCH ASSEMBLY
49	17357	17357	JUNCTION BOX SHIELD
50	N/A	R2566	WIRE 5 1/2” BLACK (2 REQUIRED)
51	N/A	R11123	WIRE HARNESS
52	N/A	29382	TRAY, CONTROL MODULE
53	N/A	R11128	AC ADAPTOR, 7.0 VDC
54	N/A	R11034	WIRE ASSEMBLY
55	N/A	N/A	IGNITER WIRE (SPARK PLUG WIRE)
56	N/A	N/A	CORD SET
57	N/A	N/A	GASKET, PSE IGNITER
58	N/A	N/A	SPARK IGNITER PLATE
59	N/A	31300	PILOT BRACKET
N/S	15999	15999	EMBER MATERIAL (ROCKWOOL)

N/S - NOT SHOWN

USE ONLY MANUFACTURER’S REPLACEMENT PARTS. USE OF ANY OTHER PARTS COULD CAUSE INJURY OR DEATH.

DVD48FP(3,7) PARTS VIEW

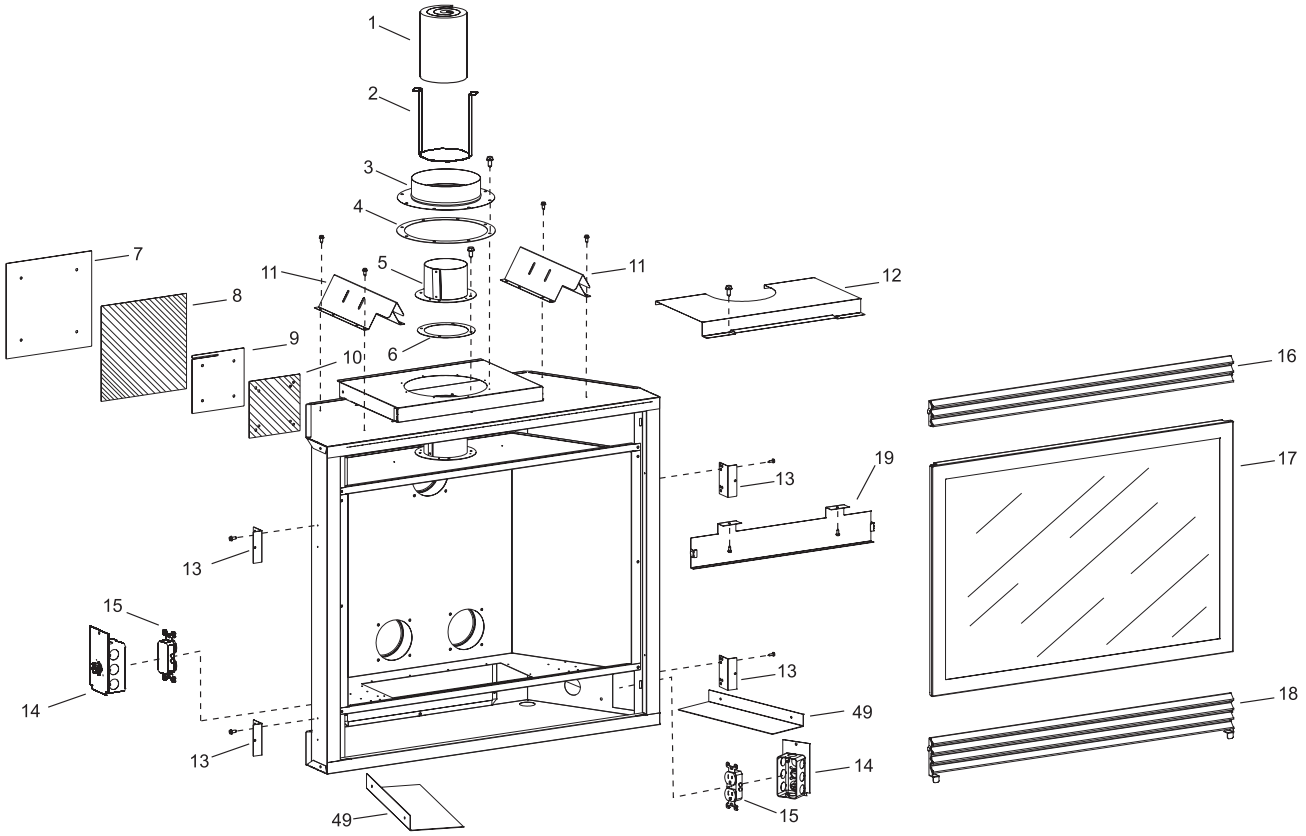

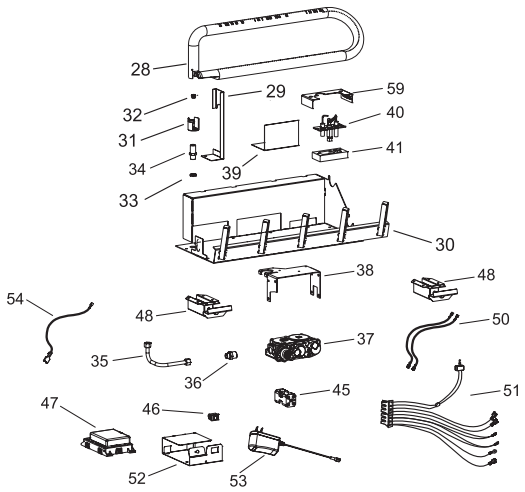

INTERMITTENT PILOT BURNER ASSEMBLY

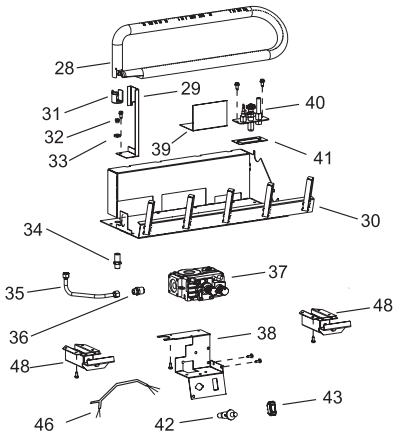

MILLIVOLT BURNER ASSEMBLY

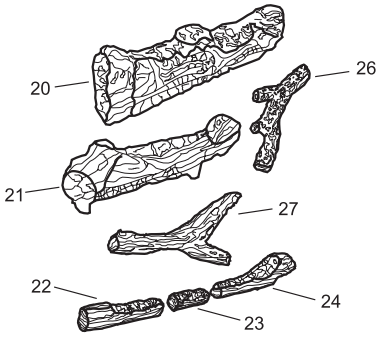

LOG ASSEMBLY

USE ONLY MANUFACTURER'S REPLACEMENT PARTS. USE OF ANY OTHER PARTS COULD CAUSE INJURY OR DEATH.

FBB4 OPTIONAL VARIABLE SPEED BLOWER INSTALLATION

Attention: Install blower assembly before connecting gas inlet supply line

NOTICE: Junction box on right side of fireplace must be pre-wired at time of fireplace installation for use with blower assembly. It is recommended that an ON/OFF wall switch be installed that will activate the power supply to the furnace by a qualified electrician.

1. If installed, turn OFF gas supply to fireplace.
2. If applicable, turn OFF electric supply to fireplace.
3. Lower bottom louver on fireplace.
4. Refer to page 66, "Junction Box Wiring Installation Instructions" to complete wiring of junction box.

Attention: If installed, do not damage gas inlet supply line when blower assembly is inserted into fireplace. If necessary, remove gas inlet supply line.

5. Insert blower assembly into interior, bottom of fireplace. Position blower assembly behind gas valve, align notch on back of blower assembly with center screw on fireplace back and push blower assembly against fireplace back. The magnets on the back and bottom of blower assembly will sufficiently hold blower assembly in place.
6. Position speed control box to the right of gas valve. Attach speed control box to bottom of fireplace. The magnets on bottom of speed control box will sufficiently hold speed control box in place.
7. With base (flush face) of fan control switch facing upward, insert base of fan control switch under the mounting tabs on valve bracket. The base (flush face) of fan control switch must be in contact with bottom of firebox.
8. Insert power cord plug into junction box.
9. Close bottom louver on fireplace.
10. Installation of FBB4 optional variable speed blower assembly is completed.

Wiring

The appliance, when installed, must be electrically grounded in accordance with local codes or, in the absence of local codes, with the *National Electrical Code, ANSI/NFPA 70*, if an external electrical source is utilized. **This appliance is equipped with a three-prong [grounding] plug for your protection against shock hazard and should be plugged directly into a properly grounded three-prong receptacle. Do not cut or remove the grounding prong from this plug.** For an ungrounded receptacle, an adapter, which has two prongs and a wire for grounding, can be purchased, plugged into the ungrounded receptacle and its wire connected to the receptacle mounting screw. With this wire completing the ground, the appliance cord plug can be plugged into the adapter and be electrically grounded.

CAUTION: Label all wires prior to disconnection when servicing controls. Wiring errors can cause improper and dangerous operation. Verify proper operation after servicing.

Blower Motor

The blower motor does not have oiling holes. Do not attempt to oil the blower motor.

Blower Wheels

The blower wheels will collect lint and could require periodic cleaning. If the air output decreases or the noise level increases, it indicates a dirty blower wheel. Remove fan and clean blower wheels.

WARNING: Unplugging of blower accessory will not stop the heater from cycling. To turn off gas to the heater (millivolt model): push in gas control knob slightly and turn clockwise to "OFF." Do not force.

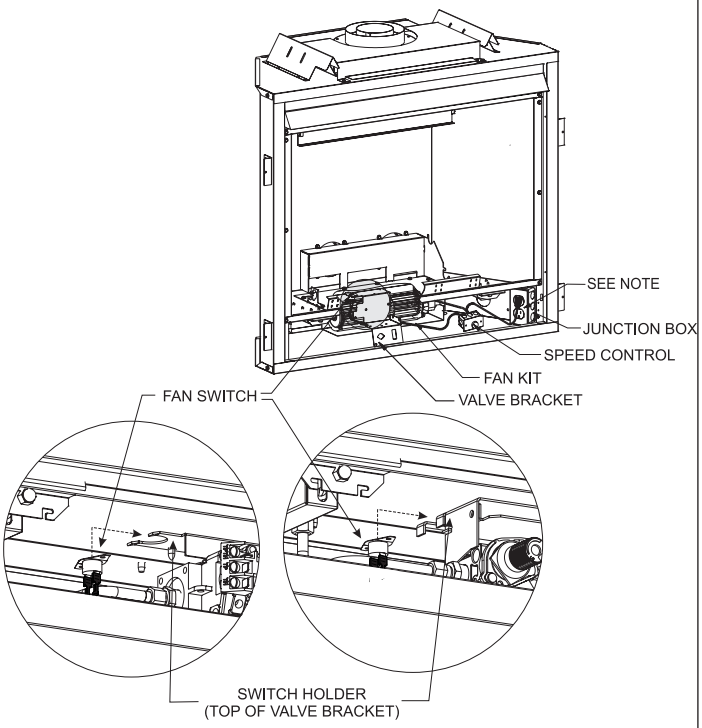

NOTICE: **Refer to wiring instructions on page 61 for proper operation.**

FBB4 OPTIONAL VARIABLE SPEED BLOWER INSTALLATION

1	R7731	BLOWER ASSEMBLY
2	31920	SWITCH ASSEMBLY
3	R4192	SPEED CONTROL KNOB
4	R4186	SPEED CONTROL

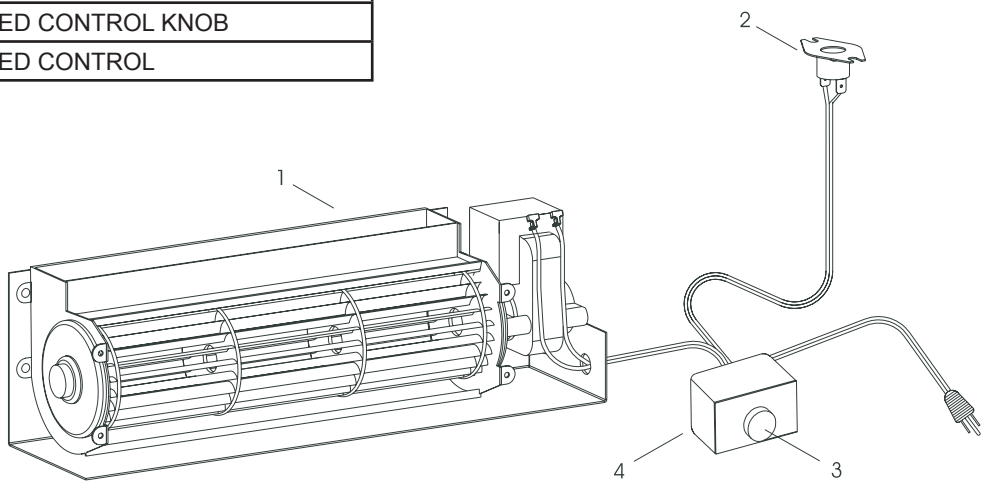

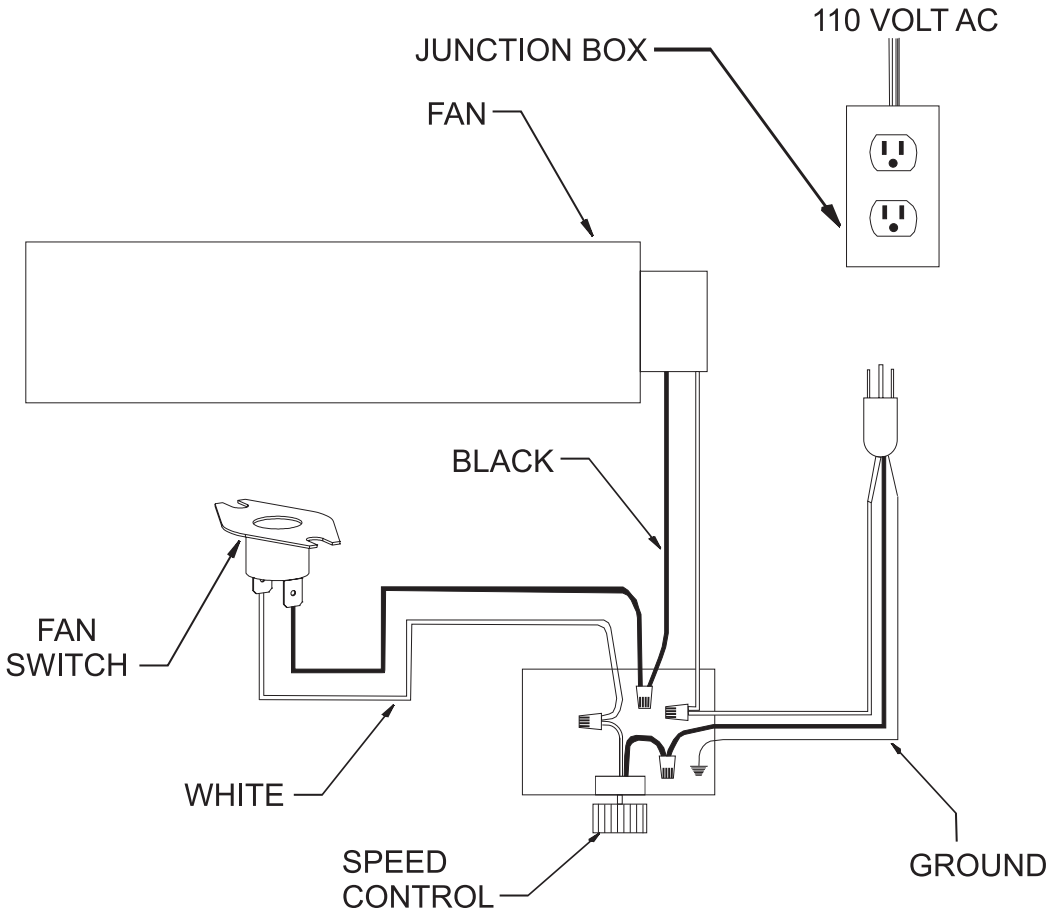

JUNCTION BOX WIRING INSTALLATION INSTRUCTIONS

STANDARD MILLIVOLT VALVE MODELS

CAUTION: ALL WIRING SHOULD BE DONE BY A QUALIFIED ELECTRICIAN AND SHALL BE IN COMPLIANCE WITH ALL LOCAL, CITY AND STATE BUILDING CODES. BEFORE MAKING THE ELECTRICAL CONNECTION, MAKE SURE THAT MAIN POWER SUPPLY IS DISCONNECTED. THE APPLIANCE, WHEN INSTALLED, MUST BE ELECTRICALLY GROUNDED IN ACCORDANCE WITH LOCAL CODES OR, IN THE ABSENCE OF LOCAL CODES, WITH THE NATIONAL ELECTRICAL CODE ANSI/NFPA 70 (LATEST EDITION).

A factory installed junction box is located on the lower right side of the fireplace. Wiring must be fed to the junction box and attached to the receptacle that is provided. Leave approximately 6" of wire in the junction box for connection.

Attach black wire to one side of the receptacle and white wire to opposite side of receptacle. The ground wire should be attached to the green (ground) screw.

Install the receptacle into the junction box. Attach cover plate.

JUNCTION BOX CONNECTIONS

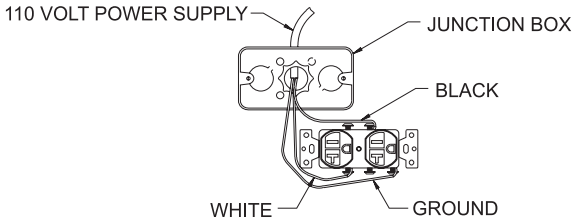

OPTIONAL BRICK LINER INSTALLATION INSTRUCTIONS

1. Using gloves, unpack liner components and check for damaged or missing components.
2. Lower bottom louver and remove upper louver on fireplace.
3. Remove glass frame assembly from fireplace.
4. Remove rear logs from burner assembly.
5. Place brick panel (rear) against rear wall in fireplace.
   NOTICE: The top edge will have a half-moon cutout relief to match up with the rear flue vent hole.
6. While holding the front finished edge of a side brick panel (left & right), place brick panel (sides) against side walls in fireplace.
   NOTICE: The side brick panels should be installed with full brick pattern at the bottom. Move side panels rearward until the back edge meets the rear brick panel. Slide side brick panels down so they rest on firebox bottom, and brick joints match up with the back brick panel.
7. Align grout lines on top brick panel with the grout lines on the side brick panels. Place the top brick panel into brick panel holder. With needle-nose pliers, carefully bend hold-down tabs on brick panel holder over the edges of the top brick panel. The hold-down tabs will securely hold the top brick panel in place.
8. Replace rear logs onto burner assembly. (Refer to log placement, pages 36 and 37.
9. Attach glass frame assembly onto fireplace.
10. Raise bottom louver and replace top louver onto fireplace.
11. Installation of optional brick liner is complete.

ACCESSORIES

The following accessory parts can be obtained from your Empire Comfort Systems dealer. If you need additional information beyond what your dealer can furnish, contact Empire Comfort Systems Inc., Nine Eighteen Freeburg Ave., Belleville, Illinois 62220-2623.

ACCESSORY	DESCRIPTION	MODEL NUMBER
Fan Kit 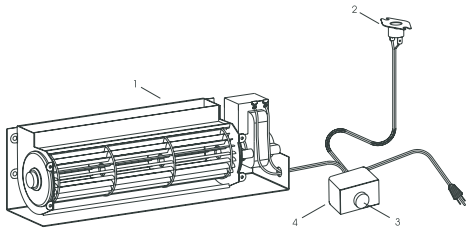	This fan kit is designed to provide forced air flow.	Variable Speed FBB4
Simulated Brick Panels 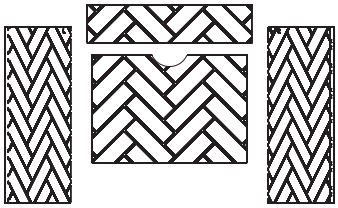	The simulated brick panels are designed to enhance the appearance of your fireplace, imitating the look of authentic masonry. **HERRINGBONE**	DVP1SH (DVD32) DVP2SH (DVD36) DVP3SH (DVD42) DVP4SH (DVD48)
Simulated Brick Panels 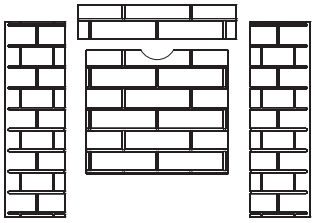	The simulated brick panels are designed to enhance the appearance of your fireplace, imitating the look of authentic masonry. **AGED BRICK**	DVP1SA (DVD32) DVP2SA (DVD36) DVP3SA (DVD42) DVP4SA (DVD48)

DECORATIVE ACCESSORIES

Decorative Frame (with hinges)
NOTICE: Decorative Frame required for use with Empire Comfort Systems Decorative Door.

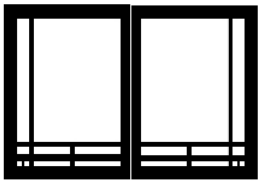

Decorative Door
Mission Rectangle

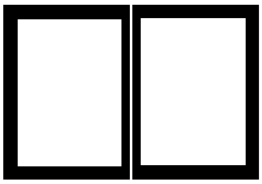

Decorative Door
Plain Rectangle

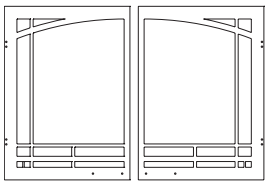

Decorative Door
Mission Arch

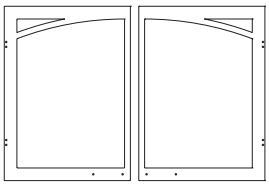

Decorative Door
Plain Arch

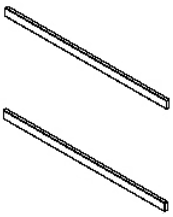

Window Trim

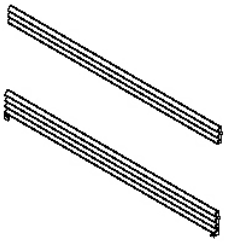

Standard Louvers 45 Degree

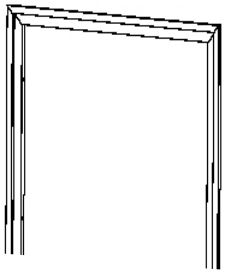

Outside Frame Kits

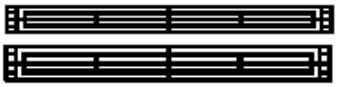

Decorative Louver
Mission

Decorative Louver
Arch

Decorative Louver
Leaf

APPLIANCE SERVICE HISTORY

Date	Dealer Name	Service Technician Name	Service Performed/Notes

MASTER PARTS DISTRIBUTOR LIST

To Order Parts Under Warranty, please contact your local Empire dealer. See the dealer locator at www.empirecomfort.com. To provide warranty service, your dealer will need your name and address, purchase date and serial number, and the nature of the problem with the unit.

To Order Parts After the Warranty Period, please contact your dealer or one of the Master Parts Distributors listed below. This list changes from time to time. For the current list, please click on the Master Parts button at www.empirecomfort.com. Please note: Master Parts Distributors are independent businesses that stock the most commonly ordered Original Equipment repair parts for Heaters, Grills, and Fireplaces manufactured by Empire Comfort Systems Inc.

Dey Distributing
1401 Willow Lake Boulevard
Vadnais Heights, MN 55101

Phone: 651-490-9191
Toll Free: 800-397-1339
Website: www.deydistributing.com
Parts: Heater, Hearth and Grills

F. W. Webb Company
200 Locust Street
Hartford, CT 06114

Phone: 860-722-2433
Toll Free: 800-243-9360
Fax: 860-293-0479
Toll Free Fax: 800-274-2004
Websites: www.fwwebb.com & www.victormfg.com
Parts: Heater, Hearth and Grills

East Coast Energy Products
10 East Route 36
West Long Branch, NJ 07764

Phone: 732-870-8809
Toll Free: 800-755-8809
Fax: 732-870-8811
Website: www.eastcoastenergy.com
Parts: Heater, Hearth and Grills

HOW TO ORDER REPAIR PARTS

Parts Not Under Warranty

Parts can be ordered through your Service Person, Dealer, or a Master Parts Distributor. See this page for the Master Parts Distributors list. For best results, the **service person or dealer** should order parts through the distributor. Parts can be shipped directly to the **service person/dealer**.

Warranty Parts

Warranty parts will need a proof of purchase and can be ordered by your Service Person or Dealer. Proof of purchase is **required** for warranty parts.

All parts listed in the Parts List have a Part Number. When ordering parts, first obtain the Model Number and Serial Number from the name plate on your equipment. Then determine the Part Number (**not** the Index Number) and the Description of each part from the following illustration and part list. Be sure to give all this information . . .

Appliance Model Number _____ Part Description _____

Appliance Serial Number _____ Part Number _____

Type of Gas (Propane or Natural) _____

Do not order bolts, screws, washers or nuts. They are standard hardware items and can be purchased at any local hardware store.

Shipments contingent upon strikes, fires and all causes beyond our control.

WARRANTY

Empire Comfort Systems Inc. warranties this hearth product to be free from defects at the time of purchase and for the periods specified below. This warranty applies to the original purchaser only and is not transferable. All warranty repairs must be accomplished by a qualified gas appliance technician.

Limited Lifetime Parts Warranty – Factory-Installed Glass

If factory-installed glass fails because of defective workmanship or material, Empire will repair or replace it at Empire's option.

Limited Lifetime Parts Warranty – Combustion Chamber, Heat Exchanger

If the combustion chamber or heat exchanger (see parts list) fails because of defective workmanship or material, Empire will repair or replace it at Empire's option.

Limited Three-Year Parts Warranty – All Other Components (Except Remote Controls, Thermostats, Lights, Accessories and Replacement Parts)

Should any part fail because of defective workmanship or material within three years from the date of purchase, Empire will repair or replace it at Empire's option.

Limited One-Year Parts Warranty – Remote Controls, Thermostats, Lights, Accessories, and Replacement Parts

Should any remote control, thermostat, lighting system, accessory, or replacement part fail because of defective workmanship within one year from the date of purchase, Empire will repair or replace it at Empire's option.

Duties of the Owner

Have the appliance installed by a qualified installer, and operate and maintain it in accordance with the furnished instructions
Provide proof of purchase (receipt) to establish the purchase date, which determines the warranty start date.
Provide ready access to the appliance for service.

What Is Not Covered

Damage caused by misuse or improper installation.
Damage caused by improper maintenance or lack of maintenance.
Claims that do not involve defective workmanship or materials.
Unauthorized service or replacement parts.
Travel, diagnostic costs and freight charges on warranted parts to and from the factory.
Removal and reinstallation cost.

How to Get Service

Provide the dealer with the model number, serial number, type of gas, and proof of purchase. The installing dealer is responsible for providing service and will contact the factory to initiate any warranted parts replacements. Empire will make replacement parts available at the factory. Shipping expenses are not covered.
If, after contacting your Empire dealer, the service received has not been satisfactory, send an e-mail describing the issue and any actions taken to info@empirecomfort.com with "Consumer Relations" in the subject line.

Your Rights under State Law

This warranty gives you specific legal rights, and you may also have other rights, which vary from state to state.

Empire Comfort Systems Inc.
Belleville, IL

If you have a general question about our products, please e-mail us at info@empirecomfort.com.

If you have a service or repair question, please contact your dealer.

www.empirecomfort.com